F.A. RTE.	SECTION	COUNTY	TOTAL SHEET	18	13
STA.		TO STA.			
FED. ROAD DIST. NO. 1	ILLINOIS	FED. AID PROJEC			

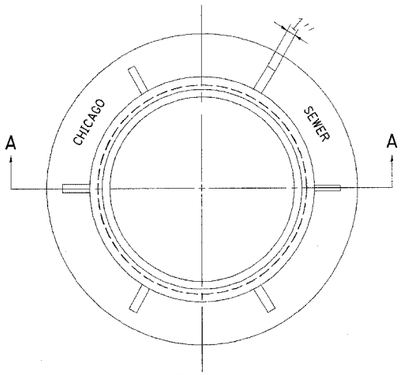

PLAN

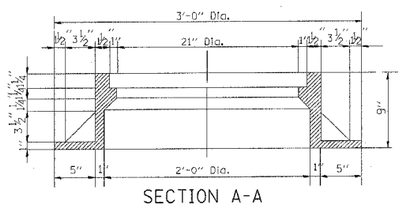

SECTION A-A

NOTE: Metal Plates Must Be Furnished For Perforated Lids On Manholes

CHICAGO STANDARD MANHOLE FRAME

Scale: 1½"=1'-0"

Material: Cast Iron

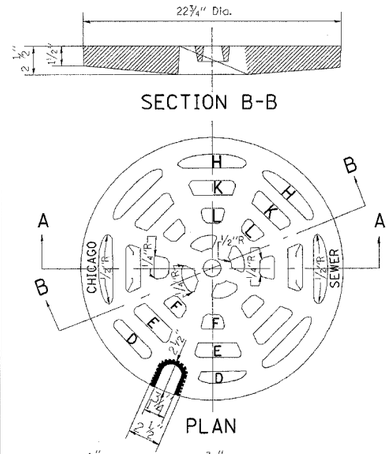

SECTION B-B

PLAN

SECTION A-A

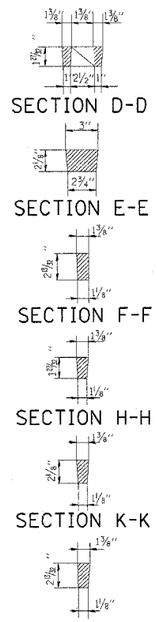

SECTION D-D

SECTION E-E

SECTION F-F

SECTION H-H

SECTION K-K

SECTION L-L

PERFORATED LID FOR CATCH BASINS & MANHOLES

Scale: 2"=1'-0"

Material: Cast Iron

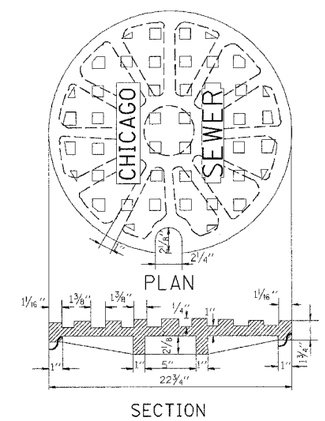

PLAN

SECTION

SOLID LID FOR MANHOLES

Scale: NONE

Material: Cast Iron

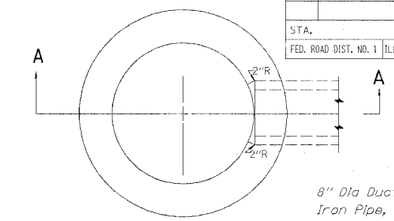

PLAN

(Frame & Lid Not Shown)

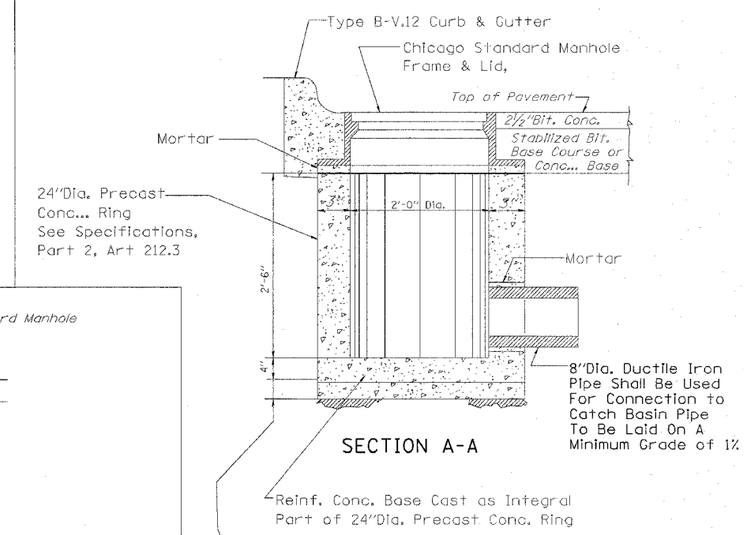

SECTION A-A

STANDARD INLETS

Scale 1"= 1'-0"

Item 12

This Inlet Detail Is Sometimes Referred To As "Chicago Standard Inlet, Type A"

NOTE:

INLETS SHALL NOT BE CONSTRUCTED UNLESS IT IS IMPOSSIBLE TO CONSTRUCT A CATCH BASIN. THE CONTRACTOR SHALL HAVE THE DEPARTMENT OF SEWERS APPROVAL BEFORE CONSTRUCTING INLETS

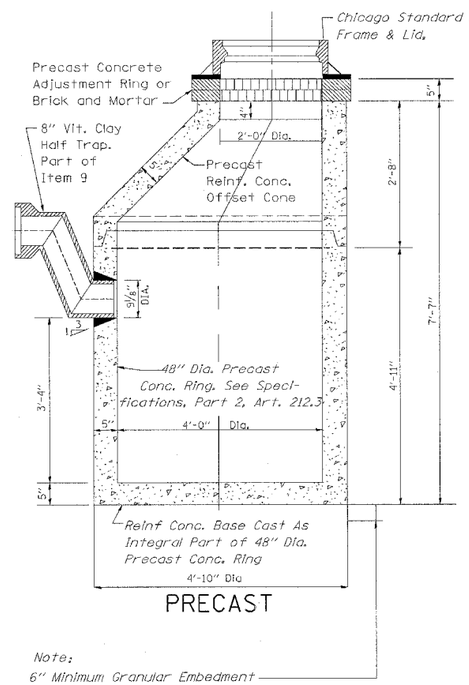

PRECAST

Note:
6" Minimum Granular Embedment Under All Catch Basins

STANDARD CATCH BASINS

Scale: ¾"= 1'-0"

Item 9

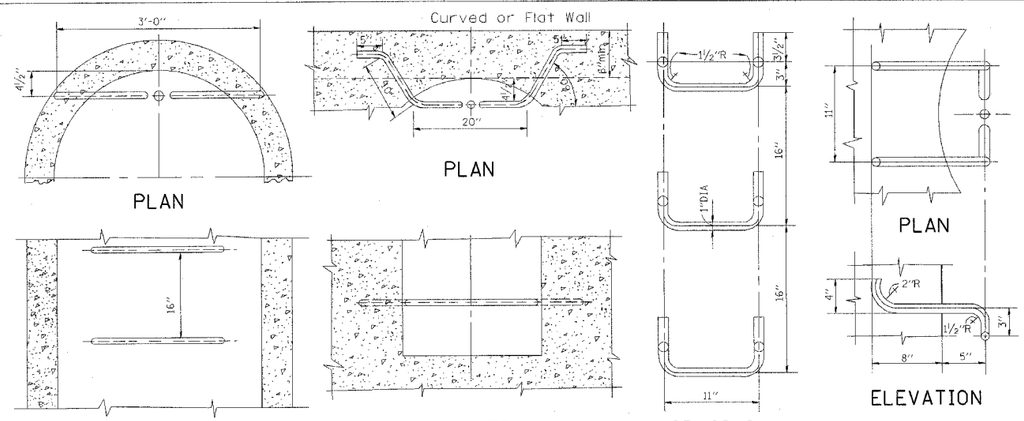

PLAN

PLAN

ELEVATION TYPE X

Scale: 1"=1'-0"

ELEVATION TYPE Y

Scale: 1"=1'-0"

SPACING

ELEVATION

STANDARD LADDER RUNGS

HANDHOLD-TYPE Z RUNG

Scale: 1½"=1'-0"

All Ladder Rungs Shall Be Aluminum or Galvanized Wrought Iron As Specified In Spefications, Part 2, rticle214.2. Rungs Shall Be 1" Diameter or of A Shape Having An Equivalent Cross-Sections! Area

CITY OF CHICAGO
DEPARTMENT OF SEWERS
ENGINEERING DIVISION

REVISIONS	
NAME	DATE
M. GOMEZ	01/25/01

ILLINOIS DEPARTMENT OF TRANSPORTATION

CITY OF CHICAGO CATCH BASIN, INLET AN MANHOLE DETAILS

SCALE: VERT. HORIZ.

DATE 10/18/2002

DRAWN BY

CHECKED BY

BD600-13 (BD47)

REVISION DATE:

•DATE-TIME•
•DGN-SPEC•
V1-BD47