STATE OF ILLINOIS
DEPARTMENT OF TRANSPORTATION

ROUTE NO.	SECTION	COUNTY	TOTAL SHEETS	SHEET NO.
F.A.P. 315	55-2	MCDONOUGH	1025	487
FED. ROAD DIST. NO. 4		ILLINOIS	FED. AID PROJECT-	

SHEET NO. 9
22 SHEETS

Contract No. 68205

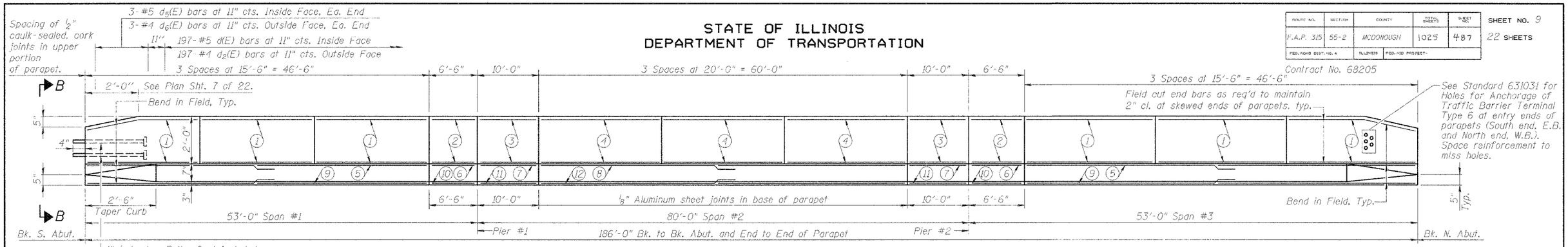

INSIDE ELEVATION OF PARAPET

Dimensions given along curb line at base of parapet
W.B., West Parapet shown, others similar

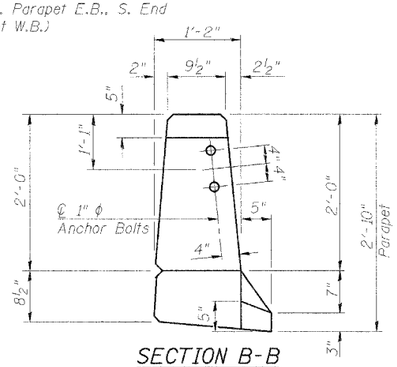

SECTION B-B

End of Parapet

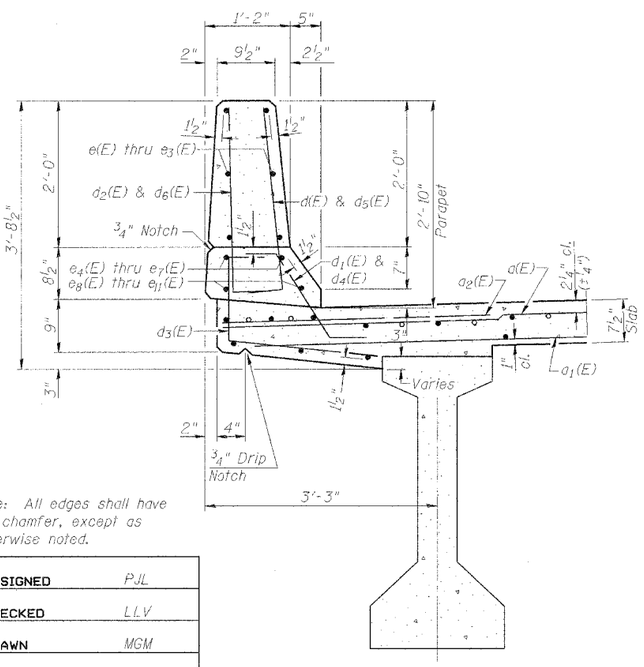

Note: All edges shall have 3/4" chamfer, except as otherwise noted.

DESIGNED	PJL
CHECKED	LLV
DRAWN	MGM
CHECKED	PJL

SECTION THRU PARAPET

PARAPET HORIZONTAL REINFORCEMENT CALLOUTS

Reinforcement shall not pass thru joints.

Top of Parapet 3-#4 bars each face	(1) 3-#4 e (E) Bars Ea. Face, Typ. 6 Panels (2) 3-#4 e1(E) Bars Ea. Face, Typ. 2 Panels (3) 3-#4 e2(E) Bars Ea. Face, Typ. 2 Panels (4) 3-#4 e3(E) Bars Ea. Face, Typ. 3 Panels
Top of Curb 2-#8 bars lap 4'-6"	(5) 1 x 2-#8 e4(E) Bars Ea. Face, Typ. 2 Panels (6) 1-#8 e5(E) Bar Ea. Face, Typ. 2 Panels (7) 1-#8 e6(E) Bar Ea. Face, Typ. 2 Panels (8) 1 x 2-#8 e7(E) Bars Ea. Face
Bottom of Curb 2-#5 bars lap 2'-2"	(9) 1 x 2-#5 e8(E) Bars Ea. Face, Typ. 2 Panels (10) 1-#5 e9(E) Bar Ea. Face, Typ. 2 Panels (11) 1-#5 e10(E) Bar Ea. Face, Typ. 2 Panels (12) 1 x 2-#5 e11(E) Bars Ea. Face

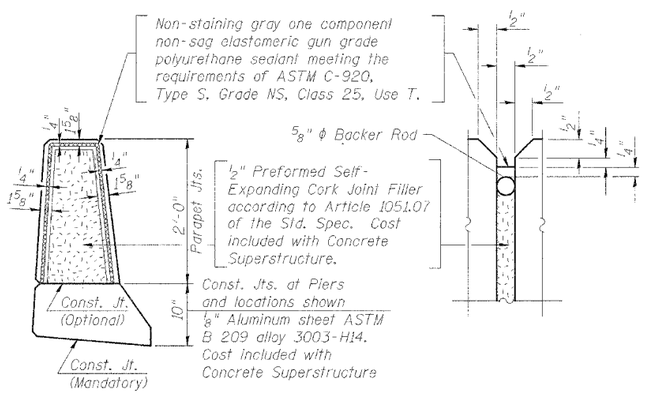

PARAPET JOINT DETAILS

SUPERSTRUCTURE BILL OF MATERIAL

Two Bridges

Bar	No.	Size	Length	Shape
d(E)	556	#5	43'-10"	
d_1(E)	444	#5	43'-0"	
d_2(E)	552	#6	4'-6"	
d_3(E)	8	#5	49'-8"	
b(E)	470	#5	38'-10"	
b_1(E)	176	#6	34'-0"	
b_2(E)	432	#5	32'-9"	
d(E)	788	#5	3'-0"	
d_1(E)	788	#5	2'-5"	
d_2(E)	788	#4	3'-0"	
d_3(E)	812	#4	3'-10"	
d_4(E)	24	#5	2'-8"	
d_5(E)	24	#5	2'-7"	
d_6(E)	24	#4	2'-7"	
e (E)	144	#4	15'-1"	
e_1 (E)	48	#4	6'-1"	
e_2 (E)	48	#4	9'-7"	
e_3 (E)	72	#4	19'-7"	
e_4 (E)	32	#8	25'-4"	
e_5 (E)	16	#8	6'-1"	
e_6 (E)	16	#8	9'-7"	
e_7 (E)	16	#8	32'-1"	
e_8 (E)	32	#5	24'-2"	
e_9 (E)	16	#5	6'-1"	
e_{10} (E)	16	#5	9'-7"	
e_{11} (E)	16	#5	30'-11"	
m (E)	16	#6	26'-0"	
m_1 (E)	24	#6	26'-11"	
m_2 (E)	56	#6	10'-1"	
m_3 (E)	72	#6	4'-10"	
m_4 (E)	8	#6	2'-4"	
m_5 (E)	96	#4	6'-4"	
m_6 (E)	28	#8	5'-10"	
s (E)	168	#5	6'-0"	
s_1(E)	144	#4	11'-0"	
s_2(E)	120	#4	10'-9"	
v (E)	172	#5	4'-1"	
Reinforcement Bars, Epoxy Coated			Pound	116,770
Concrete Superstructure			Cu. Yds.	592.7
Bridge Deck Grooving			Sq. Yds.	1,626
Protective Coat			Sq. Yd.	2,023
Name Plates			Each	2

Reinforcement bars designated (E) shall be epoxy coated.

Bars indicated thus: 20 x 3-#5 etc. indicates 20 lines of bars with 3 lengths per line.

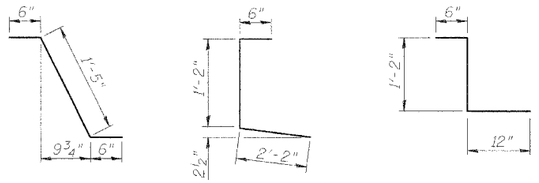

BAR d_1(E) BAR d_3(E) BAR d_4(E)

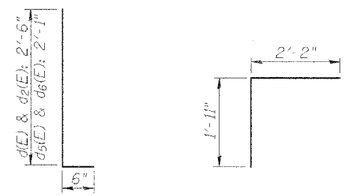

BARS d(E) d_2(E) d_5(E) & d_6(E) BAR v(E)

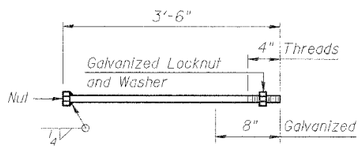

1" ϕ ANCHOR BOLT

BRIDGE PARAPET DETAILS
IL. ROUTE 336 OVER
TRIBUTARY TO
KILLJORDAN CREEK
F.A.P. ROUTE 315 SECT. 55-2
McDONOUGH COUNTY
STATION 494+75.00
STRUCTURE NO. 055-0060 (EB)
STRUCTURE NO. 055-0061 (WB)

STS CONSULTANTS
111 NE Jefferson Ave.
Peoria, Illinois 61602
Ph(309)676-8464
FAX(309)676-5445
IL Design Firm Reg. No. 184-001518

S:\09-055-0060_31.dgn 3/26/2026 10:06:52 AM