CONTRACT NO.

F.A.P. RTE.	SECTION	COUNTY	TOTAL SHEETS	SHEET NO.
749	*	EDGAR	75	36
STA.		TO STA.		
FED. ROAD DIST. NO.	ILLINOIS	FED. AID PROJECT		

* 14RS-2,122RS-3 & (123NRS,14)BR

CONTRACT NO. 70134
D-95-064-00

DETAIL OF BOX CULVERT END SECTION

A.R. BOX CULVERT TYPE 2 @ 9.0' X 3.0'

STA. 367 + 52 (CULVERT NO. 3)

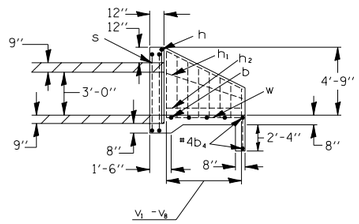

SECTION A – A

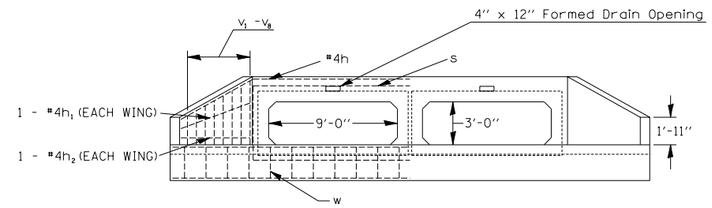

END VIEW

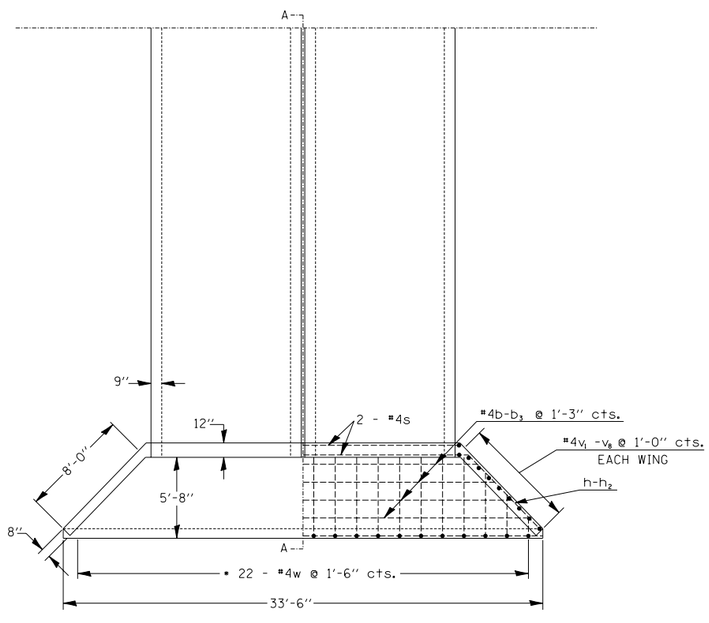

* CUT TO FIT

PLAN

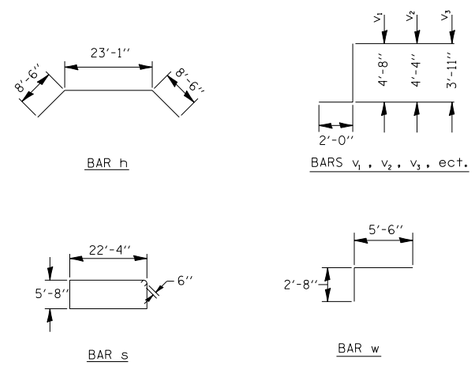

NOTES

- All bars should be rounded and shall conform to the requirements of Art. 1006.10 of Standard Specs.
- Class SI Concrete shall be used throughout.
- The Precast Concrete Box Culvert Sections shall conform to the requirements of AASHTO M273.
- All dimensions are in FEET (')-INCHES (") unless otherwise noted.
- Concrete and Rebar quantities and lengths calculated for the cast-in-place End Sections will vary based on the precast box culverts supplied.
- End Sections will be paid for at the contract unit price each for BOX CULVERT END SECTION CULVERT NO.,as outlined in Art. 540.08, which prices shall include all concrete, rebar, and all other items necessary to complete the proposed work.
- Drawings not to scale.
- Drain holes shall be provided in accordance with Art. 503.12.

BILL OF MATERIAL (ONE HEADWALL)

Bar	No.	Size	Length (ft)	Shape
b	1	#4	24'-5''	
b_1	1	#4	26'-10''	
b_2	1	#4	29'-2''	
b_3	1	#4	31'-7''	
b_4	2	#4	33'-6''	
h	1	#4	40'-1''	
h_1	2	#4	8'-2''	
h_2	2	#4	7'-10''	
s	2	#4	57'-0''	
V_1	2	#4	6'-8''	
V_2	2	#4	6'-4''	
V_3	2	#4	5'-11''	
V_4	2	#4	5'-6''	
V_5	2	#4	5'-2''	
V_6	2	#4	4'-8''	
V_7	2	#4	4'-5''	
V_8	2	#4	4'-0''	
w	22	#4	8'-2''	
Reinforcement Bars			LB.	421
Class SI Conc. Hdwall			CU. YD.	9.4

ITEM	UNIT	QUANT.
Box Culvert End Sec. Culvert No. 3	EACH	2

F.A.P. RT. 749
SEC. 14RS-2,122RS-3&(123NRS,14)BR
LOADING HS20
STR. NO. 023-8314

NAME PLATE DETAIL

NOTES

- SEE HIGHWAY STANDARD 515001-02 FOR DIMENSIONS AND PLACEMENT.
- NAME PLATE WILL BE PAID FOR AT THE CONTRACT UNIT PRICE PER "EACH" FOR "NAME PLATES"

BOX CULVERT END SECTIONS (CAST IN PLACE)
2 @ 9.0' X 3.0'
STA. 367+52 NO SKEW
STRUCTURE NO. 023-8314

REINFORCED CONCRETE HEADWALL DETAILS

REVISIONS NAME	DATE

ILLINOIS DEPARTMENT OF TRANSPORTATION

CULVERT DETAILS

SCALE: VERT. HORIZ.
DATE 050404

DRAWN BY JDC
CHECKED BY

PLOT DATE = 2/7/2006
FILE NAME = c:\pwprojects\d506400 (v8i)\details.dgn
PLOT SCALE = 47.2727 ' / IN.
REFERENCE = REF