F.A.P. RTE.	SECTION	COUNTY	TOTAL SHEETS	SHEET NO.
332	48B	VERMILION	27	1

CONTRACT NO. 70462
D-95-011-05

6-16-06 Letting, Item 141

STATE OF ILLINOIS
DEPARTMENT OF TRANSPORTATION
DIVISION OF HIGHWAYS

PROPOSED HIGHWAY PLANS

F.A.P. ROUTE 332 (IL 1)
SECTION 48B
VERMILION COUNTY
C-95-011-05

CULVERT REPLACEMENT

FOR INDEX OF SHEETS, SEE SHEET NO. 2
FOR SUMMARY OF QUANTITIES, SEE SHEET NO. 6,7

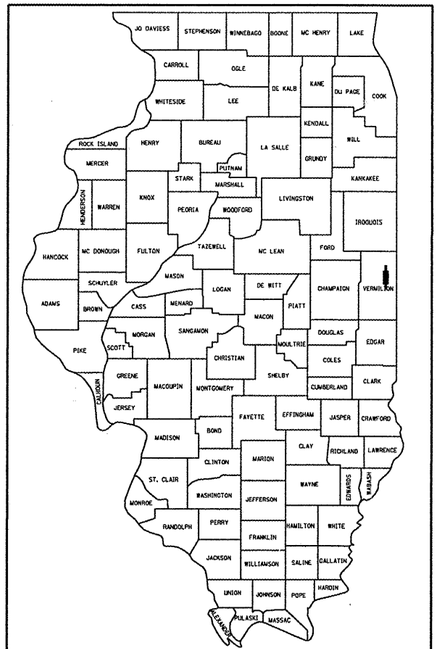

LOCATION OF SECTION INDICATED THUS:-

PROJECT ENDS
STA. 824 + 94.00

PROPOSED STRUCTURE NO. 092-8620
STA. 824 + 77.00 PCBC 12'x4'x66'

REMOVAL OF EXISTING STRUCTURE
STA. 824 + 77.00

PROJECT BEGINS
STA. 824 + 60.00

R 12 W

T 22 N

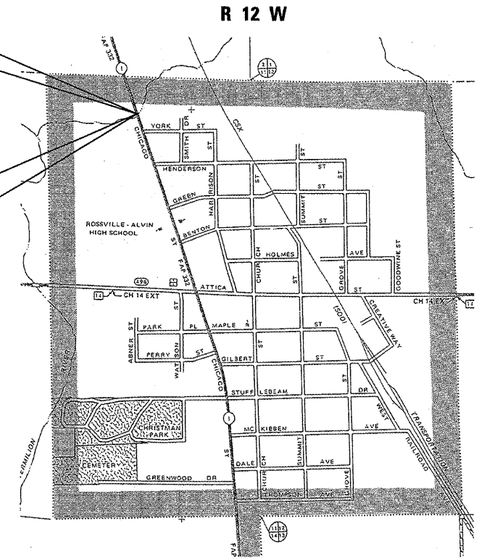

SCALE
0 800 1600 2400 3200 FEET
0 .1 .2 .3 .4 0.5 MILE
0 .2 .4 .6 .8 1.0 KILOMETER

100' 200' 300' — 1" = 100'
10' 20' 30' — 1" = 10'
50' 100' — 1" = 50'
50' 100' — 1" = 40'
50' 100' — 1" = 30'
50' 100' — 1" = 20'

FULL SIZE PLANS HAVE BEEN PREPARED USING STANDARD ENGINEERING SCALES. REDUCED SIZED PLANS WILL NOT CONFORM TO STANDARD SCALES. IN MAKING MEASUREMENTS ON REDUCED PLANS, THE ABOVE SCALES MAY BE USED.

FOR UNDERGROUND UTILITY LOCATIONS CALL
TOLL FREE J.U.L.I.E. TELEPHONE NO.
1-800-892-0123
VILLAGE OF ROSSVILLE

STATE OF ILLINOIS
DEPARTMENT OF TRANSPORTATION
DIVISION OF HIGHWAYS

SUBMITTED 3/28 20 06
Joseph E. Cousin
DEPUTY DIRECTOR OF HIGHWAYS, REGION ENGINEER
May 12, 20 06
Mike Hine
ENGINEER OF DESIGN AND ENVIRONMENT
May 12, 20 06
Milton R. Sees P.E.
DIRECTOR OF HIGHWAYS, CHIEF ENGINEER

DESIGN DESIGNATION
IL RTE. 1
OTHER PRINCIPAL ARTERIAL
ADT - 5,400 (2005)

PRINTED BY THE AUTHORITY OF THE STATE OF ILLINOIS

CONTRACT NO. 70462

TOTAL LENGTH OF SECTION & PROJECT = 34.0 FEET = .006 MILES
NET LENGTH OF SECTION & PROJECT = 34.0 FEET = .006 MILES

PROJECT ENGINEER: KENSIL GARNETT (217) 465-4181
SQUAD LEADER: ROBERT M. NELSON
DESIGNER: BENJAMIN SETZER

F.A.P. RTE.	SECTION	COUNTY	TOTAL SHEETS	SHEET NO.
332	48B	VERMILION	27	2

CONTRACT NO. 70462

INDEX OF SHEETS

SHEET NO.	DESCRIPTION
1	COVER SHEET
2	INDEX OF SHEETS / LIST OF STANDARDS
3 - 5	GENERAL NOTES
6 - 7	SUMMARY OF QUANTITIES
8	EXISTING TYPICAL CROSS SECTION
9 - 10	PROPOSED TYPICAL CROSS SECTIONS
11 - 12	SCHEDULE OF QUANTITIES
13	TIE POINT LAYOUT
14	PLAN AND PROFILE: FAP 332
15	DETAIL OF BOX CULVERT END SECTION (UPSTREAM)
16	DETAIL OF BOX CULVERT END SECTION (DOWNSTREAM)
17	DETAIL OF POROUS GRANULAR BACKFILL PAY LIMITS (SN 092-8620)
17	DETAIL OF DEPRESSING GUTTER GRADES (25 mm, 1" DROP)
18	DETAIL OF TREATMENT OF EXISTING FIELD TILE SYSTEMS
19 - 22	TYPICAL APPLICATIONS OF PAVEMENT MARKINGS AND MARKERS
23 - 27	CROSS SECTIONS

LIST OF STANDARDS

STANDARD NO.	NAME OF STANDARD
000001-04	STANDARD SYMBOLS, ABBREVIATIONS AND PATTERNS
001001	AREAS OF REINFORCEMENT BARS
001006	DECIMAL OF AN INCH AND OF A FOOT
280001-02	TEMPORARY EROSION CONTROL SYSTEMS
442201-01	CLASS C AND D PATCHES
515001-02	NAME PLATE FOR BRIDGES
606001-02	CONCRETE CURB TYPE B AND COMBINATION CONCRETE CURB AND GUTTER
667101	PERMANENT SURVEY MARKERS
701006-02	OFF - ROAD OPERATIONS 2L, 2W 4.5m (15') TO PAVEMENT TO 600mm (24') FROM PAVEMENT EDGE
701201-02	LANE CLOSURE, 2L, 2W, DAY ONLY, FOR SPEEDS ≥ 45 MPH
701206-01	LANE CLOSURE, 2L, 2W, NIGHT ONLY, FOR SPEEDS > 45 MPH
701301-02	LANE CLOSURE, 2L, 2W, SHORT TIME OPERATIONS
701311-02	LANE CLOSURE, 2L, 2W, MOVING OPERATIONS - DAY ONLY
701801-03	LANE CLOSURE MULTILANE 1W OR 2W CROSSWALK OR SIDEWALK CLOSURE
702001-06	TRAFFIC CONTROL DEVICES
780001-01	TYPICAL PAVEMENT MARKINGS

F.A.P. RTE.	SECTION	COUNTY	TOTAL SHEETS	SHEET NO.
332	48B	VERMILION	27	3

CONTRACT NO. 70462

GENERAL NOTES

G.N.-100

ENGLISH UNITS OF MEASUREMENT SHALL GOVERN OVER AND SUPERSEDE ANY METRIC UNITS SHOWN IN THIS CONTRACT. WHERE INCLUDED, METRIC UNITS ARE FOR INFORMATION ONLY.

G.N.-105.09A

ALL ELEVATIONS SHOWN IN THE PLANS ARE BASED ON NORTH AMERICAN VERTICAL DATUM OF 1988. (NAVD 88)

G.N.-107.31

UTILITY LINES WERE PLOTTED FROM INFORMATION FURNISHED BY THE VARIOUS UTILITY COMPANIES INVOLVED (QUALITY LEVEL C &/OR QUALITY LEVEL D) AND THE ACCURACY SHOULD BE CONSIDERED APPROXIMATE ONLY.

UTLILITY COMPANIES MAY BE ADJUSTING THEIR FACILITIES DURING CONSTRUCTION. THE CONTRACTOR SHALL COOPERATE WITH THESE ORGANIZATIONS WHILE THESE ADJUSTMENTS ARE BEING PERFORMED. J.U.L.I.E. - JOINT UTILITY LOCATION INFORMATION FOR EXCAVATORS SYSTEM (800)892-0123.

G.N.-201

TREES THAT INTERFERE WITH THE CONSTRUCTION OPERATIONS SHALL BE REMOVED AS DIRECTED BY THE ENGINEER. ANY TREE DUE TO ITS LOCATION AND DEEMED SUITABLE FOR SAVING BY THE ENGINEER SHALL BE PROTECTED DURING CLEARING AND SUBSEQUENT CONSTRUCTION OPERATIONS.

G.N.-202

GRADING SHALL BE DONE BY HAND AROUND LIGHT POLES, UTILITY POLES, SIGN POSTS, SHRUBS, TREES OR OTHER NATURAL OR MAN-MADE OBJECTS WHERE SHALLOW FILLS OR CUTS ARE ADJACENT TO THE ITEMS. IT IS THE INTENT THAT THE LIMITS OF CONSTRUCTION BE SUCH AS TO PRESERVE IN THE ORIGINAL STATE AS MUCH AREA OF TEMPORARY EASEMENTS AS POSSIBLE. THE DECISION AS TO ITEMS TO REMAIN IN PLACE SHALL BE AS DIRECTED BY THE ENGINEER.

THIS WORK WILL NOT BE PAID FOR SEPARATELY, BUT SHALL BE CONSIDERED INCLUDED IN THE CONTRACT UNIT PRICE PER CUBIC YARD FOR EARTH EXCAVATION AND NO ADDITIONAL COMPENSATION WILL BE ALLOWED.

G.N.-250C

TEMPORARY EROSION CONTROL SEEDING, AND MULCH, METHOD 2 IS INCLUDED IN THIS CONTRACT TO SEED NEW EARTH SHOULDERS DURING TIME PERIODS WHEN PERMANENT SEEDING IS NOT ALLOWED. SOME OR ALL OF THE TEMPORARY EROSION CONTROL SEEDING AND MULCH WILL BE DELETED IF IT IS POSSIBLE TO PLACE PERMANENT SEEDING ON EARTH SHOULDERS AT THE TIME OF THEIR COMPLETION.

F.A.P. RTE.	SECTION	COUNTY	TOTAL SHEETS	SHEET NO.
332	48B	VERMILION	27	4

CONTRACT NO. 70462

GENERAL NOTES

G.N. -406H

MIXTURE REQUIREMENTS

The following mixture requirements are applicable for this project:

Location	IL 1	IL 1
Mixture Use	Bottom 7 1/2"	Top 1 1/2" of
	of Class D Patch	Class D Patch
AC/PG	PG 64-22	PG 64-22
RAP % (Max)	25	15
Design Air Voids	4.0% @ Ndes=50	4.0% @ Ndes=50
Mix Comp(Gradation)	IL 19.0	IL 9.5
Friction Aggregate	N.A.	Mix D

G.N.-440B

THE EXISTING TIE BARS BETWEEN THE EXISTING PAVEMENT AND EXISTING MEDIANS, GUTTERS AND/OR COMBINATION CURB AND GUTTERS THAT ARE FOUND SUITABLE FOR REUSE SHALL BE CLEANED, STRAIGHTENED AND INCORPORATED INTO THE NEW CONSTRUCTION. ANY EXISTING TIE BARS THAT ARE FOUND UNSUITABLE TO BE INCORPORATED INTO THE PROPOSED CONSTRUCTION DUE TO EXCESSIVE RUSTING OR DISTRESS SHALL BE REMOVED FLUSH WITH THE FACE OF THE EXISTING CONCRETE AND DISPOSED OF OUTSIDE THE LIMITS OF THE RIGHT-OF-WAY IN ACCORDANCE WITH ARTICLE 202.03 OF THE STANDARD SPECIFICATIONS.

THIS WORK WILL NOT BE PAID FOR SEPARATELY BUT SHALL BE CONSIDERED INCLUDED IN THE VARIOUS REMOVAL PAY ITEMS AND NO ADDITIONAL COMPENSATION WILL BE ALLOWED.

G.N.-502.10

THE CUBICAL DEPOSIT OF COARSE AGGREGATE SHALL BE COMPLETELY ENCLOSED IN A FABRIC ENVELOPE. THE FABRIC SHALL CONFORM TO THE REQUIREMENTS OF THE APPLICABLE PORTIONS OF SECTION 1080 AND SECTION 282 WITH EITHER THE 6 OZ. OR 8 OZ. PER SQUARE YARD MATERIAL ALLOWED. FREE EDGES SHALL OVERLAP BY 12 inches.

THIS REQUIREMENT WILL NOT BE PAID FOR SEPARATELY BUT SHALL BE CONSIDERED AS INCLUDED IN THE VARIOUS ITEMS REQUIRING PLACEMENT OF THE CUBICAL DEPOSITS OF COARSE AGGREGATE.

G.N.-540

THE CONTRACTOR SHALL ASSEMBLE AND MATCH-MARK THE PRECAST BOX CULVERT SECTIONS AND END SECTIONS PRIOR TO SHIPMENT OF THESE COMPONENTS FROM THE MANUFACTURER, AND AS DIRECTED BY THE ENGINEER IN ORDER TO SECURE A PROPER FIT ON EACH JOINT. ANY SECTIONS OR END SECTIONS WHICH DO NOT PROVIDE A PROPER FIT AT THE JOINT SHALL BE REJECTED BY THE ENGINEER AND REPLACED BY THE CONTRACTOR WITH NO ADDITIONAL COMPENSATION BEING ALLOWED.

THIS WORK WILL NOT BE PAID FOR SEPARATELY, BUT SHALL BE INCLUDED IN THE CONTRACT UNIT PRICE PER FOOT FOR PRECAST CONCRETE BOX CULVERTS OF THE SIZE SPECIFIED.

F.A.P. RTE.	SECTION	COUNTY	TOTAL SHEETS	SHEET NO.
332	48B	VERMILION	27	5

CONTRACT NO. 70462

GENERAL NOTES

G.N.-540A

CAST IN PLACE END SECTIONS, HEADWALLS, AND COLLARS ARE REQUIRED FOR PRECAST BOX CULVERTS. SHOP PLANS WILL NOT BE REQUIRED WITH CAST IN PLACE ITEMS CONSTRUCTED AS SHOWN IN THE PLANS. SHOP PLANS SHALL BE SUBMITTED FOR CHANGED OR MODIFIED CAST IN PLACE DETAILS IN ACCORDANCE WITH ARTICLE 540.06.

G.N.-703A

SHORT TERM PAVEMENT MARKING SHALL BE APPLIED TO THE PAVEMENT AFTER ANY OF THE FOLLOWING: COLD MILLING AND/OR PLACING BITUMINOUS MATERIALS (PRIME COAT), LEVELING BINDER (MACHINE METHOD), BINDER AND SURFACE COURSES. SHORT TERM PAVEMENT MARKING PLACED ON THE SURFACE, SHALL COINCIDE WITH THE FINAL PAVEMENT STRIPING. SHORT TERM PAVEMENT MARKING PLACED PRIOR TO THE SURFACE SHALL COINCIDE WITH THE EXISTING PAVEMENT MARKINGS. USE 4 FEET PER 40 FEET (OR 10% PER STATION).

G.N.-Z0038

AN ALUMINUM TABLET OF THE TYPE SHOWN ON STANDARD 667101 SHALL BE PLACED ON THE PROPOSED STRUCTURE AS DIRECTED BY THE ENGINEER. THE BENCH MARK ELEVATION WILL BE ESTABLISHED AND MARKED BY THE DEPARTMENT. THIS WORK WILL BE PAID FOR AT THE CONTRACT UNIT PRICE EACH FOR PERMANENT BENCH MARKS

COMMITMENTS:

PLEASE PLACE THE FOLLOWING TREES ON THE PROPERTY: 2 SUGAR MAPLE TREES; 2 EUROPEAN BEECH TREES; 2 SUMMIT ASH TREES; 1 PIN OAK; 1 RED OAK TREE. PLEASE CONTACT MR. MARGANSKI FOR PLACEMENT OF TREES ON THE PROPERTY.

IF THERE IS ANY EXCESS DIRT FROM THE PROJECT, PLEASE LEAVE IT ON MR. MARGANSKI'S PROPERTY.

604 NORTH CHICAGO
ROSSVILLE, IL 60963

F.A.P. RTE.	SECTION	COUNTY	TOTAL SHEETS	SHEET NO.
332	48B	VERMILION	27	6

CONTRACT NO. 70462

70462

SUMMARY OF QUANTITIES

LOCATION OF WORK: VERMILION COUNTY
RURAL
ROADWAY / STRUCTURE
IMPROVEMENTS
FAP 332
STA. 824+60
STA. 824+94

CONSTRUCTION TYPE CODE: 100% STATE X028-2A

CODE NO	ITEM	UNIT	TOTAL QUANTITY	
* A2015990	TREE, FAGUS SYLVATICA, EUROPEAN BEECH, 1-1/2" BALLED AND BURLAPPED	EACH	2.0	2.0
20100310	TREE REMOVAL, SPECIAL (6 TO 15 UNITS DIAMETER)	UNIT	100.0	100.0
20300100	CHANNEL EXCAVATION	CU YD	1,219.0	1,219.0
20900110	POROUS GRANULAR BACKFILL	CU YD	238.0	238.0
21301052	EXPLORATION TRENCH 52" DEPTH	FOOT	100.0	100.0
* 25000314	SEEDING, CLASS 4B	ACRE	0.5	0.5
* 25000400	NITROGEN FERTILIZER NUTRIENT	POUND	45.0	45.0
* 25000500	PHOSPHORUS FERTILIZER NUTRIENT	POUND	45.0	45.0
* 25000600	POTASSIUM FERTILIZER NUTRIENT	POUND	45.0	45.0
* 25100115	MULCH, METHOD 2	ACRE	0.5	0.5
28000250	TEMPORARY EROSION CONTROL SEEDING	POUND	50.0	50.0
28000300	TEMPORARY DITCH CHECKS	EACH	4.0	4.0
28000500	INLET AND PIPE PROTECTION	EACH	1.0	1.0
42400100	PORTLAND CEMENT CONCRETE SIDEWALK 4 INCH	SQ FT	170.0	170.0
44000500	COMBINATION CURB AND GUTTER REMOVAL	FOOT	68.0	68.0
44000600	SIDEWALK REMOVAL	SQ FT	170.0	170.0
44201759	CLASS D PATCHES, TYPE IV, 9 INCH	SQ YD	159.0	159.0
50100100	REMOVAL OF EXISTING STRUCTURES	EACH	1.0	1.0
51500100	NAME PLATES	EACH	1.0	1.0
54001000	BOX CULVERT END SECTIONS	EACH	2.0	2.0
54021204	PRECAST CONCRETE BOX CULVERT 12' X 4' (M273)	FOOT	66.0	66.0

* SPECIALITY ITEM

F.A.P. RTE.	SECTION	COUNTY	TOTAL SHEETS	SHEET NO.
332	48B	VERMILION	27	7

CONTRACT NO. 70462

70462

SUMMARY OF QUANTITIES

LOCATION OF WORK: VERMILION COUNTY
RURAL
ROADWAY / STRUCTURE
IMPROVEMENTS
FAP 332
STA. 824+60
STA. 824+94

CONSTRUCTION TYPE CODE: 100% STATE

CODE NO	ITEM	UNIT	TOTAL QUANTITY	X028-2A
60603800	COMBINATION CONCRETE CURB AND GUTTER, TYPE B-6.12	FOOT	68.0	68.0
67100100	MOBILIZATION	L SUM	1.0	1.0
70100450	TRAFFIC CONTROL AND PROTECTION, STANDARD 701201	L SUM	1.0	1.0
70100455	TRAFFIC CONTROL AND PROTECTION, STANDARD 701206	L SUM	1.0	1.0
70102640	TRAFFIC CONTROL AND PROTECTION, STANDARD 701801	L SUM	1.0	1.0
70300100	SHORT-TERM PAVEMENT MARKING	FOOT	12.0	12.0
70300220	TEMPORARY PAVEMENT MARKING - LINE 4"	FOOT	77.0	77.0
70301000	WORK ZONE PAVEMENT MARKING REMOVAL	SQ FT	4.0	4.0
* 78001110	PAINT PAVEMENT MARKING - LINE 4"	FOOT	77.0	77.0
* A2001724	TREE, ACER SACCHARUM (SUGAR MAPLE), 3" CALIPER, BALLED AND BURLAPPED	EACH	2.0	2.0
* A2004224	TREE, FRAXINUS PENNSYLVANICA SUMMIT (SUMMIT GREEN ASH), 3" CALIPER, BALLED AND BURLAPPED	EACH	2.0	2.0
* A2006920	TREE, QUERCUS PALUSTRIS (PIN OAK), 2-1/2" CALIPER, BALLED AND BURLAPPED	EACH	1.0	1.0
* A2007120	TREE, QUERCUS RUBRA (RED OAK), 2-1/2" CALIPER, BALLED AND BURLAPPED	EACH	1.0	1.0
X7015005	CHANGEABLE MESSAGE SIGN	CAL DA	10.0	10.0
XX004548	TREE PROTECTION AND PRESERVATION	L SUM	1.0	1.0
Z0038700	PERMANENT BENCH MARKS	EACH	1.0	1.0

* SPECIALITY ITEM

3/23/2006

F.A.P. RTE.	SECTION	COUNTY	TOTAL SHEETS	SHEET NO.
332	48B	VERMILION	27	8

CONTRACT NO. 70462

EXISTING TYPICAL CROSS SECTION

IL. ROUTE 1 (F.A.P. ROUTE 332)

STATION 824+60 TO STATION 824+94

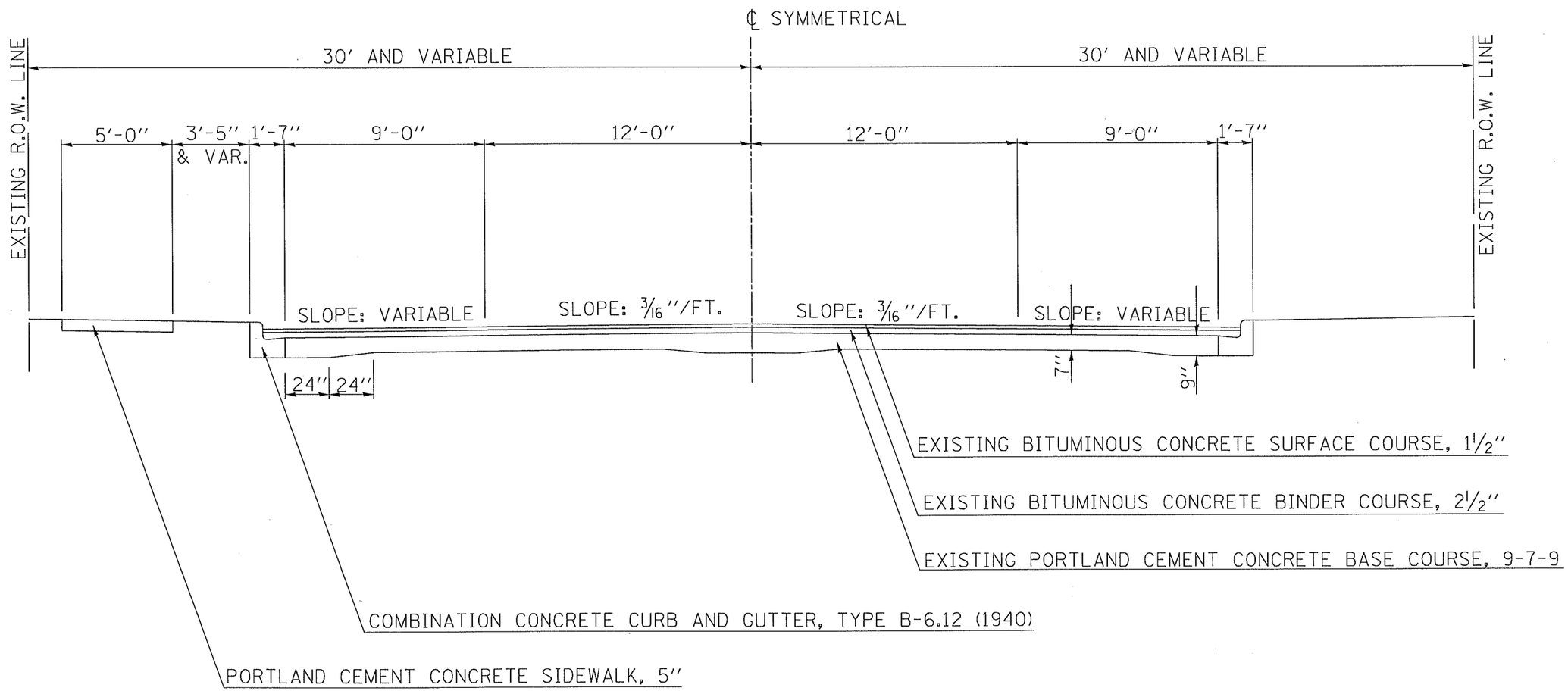

c:\projects\d501105 (v8)\typicals.dgn

3/23/2006

F.A.P. RTE.	SECTION	COUNTY	TOTAL SHEETS	SHEET NO.
332	48B	VERMILION	27	9

CONTRACT NO. 70462

PROPOSED TYPICAL CROSS SECTION (1)

IL. ROUTE 1 (F.A.P. ROUTE 332)

STATION 824+60.00 TO STATION 824+70.00 (2)
(2) STATION 824+84.00 TO STATION 824+94.00

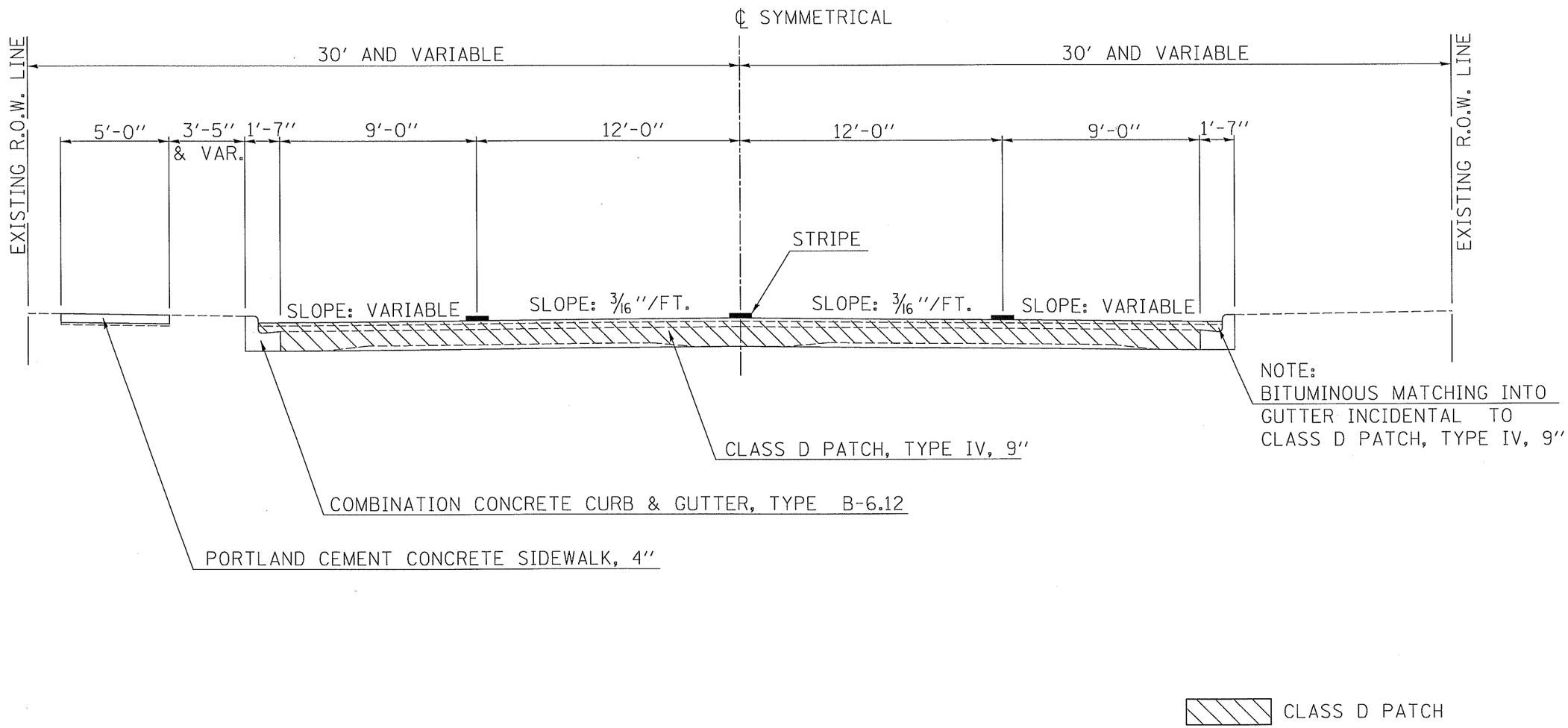

c:\projects\d501105 (v8)\typicals.dgn

3/23/2006

F.A.P. RTE.	SECTION	COUNTY	TOTAL SHEETS	SHEET NO.
332	48B	VERMILION	27	10

CONTRACT NO. 70462

PROPOSED TYPICAL CROSS SECTION (2)

IL. ROUTE 1 (F.A.P. ROUTE 332)

(1) STATION 824+70.00 TO STATION 824+84.00 (1)

NOTE:
BOX CULVERT MUST HAVE A MINIMUM OF 6" COVER AT THE CURB LINE

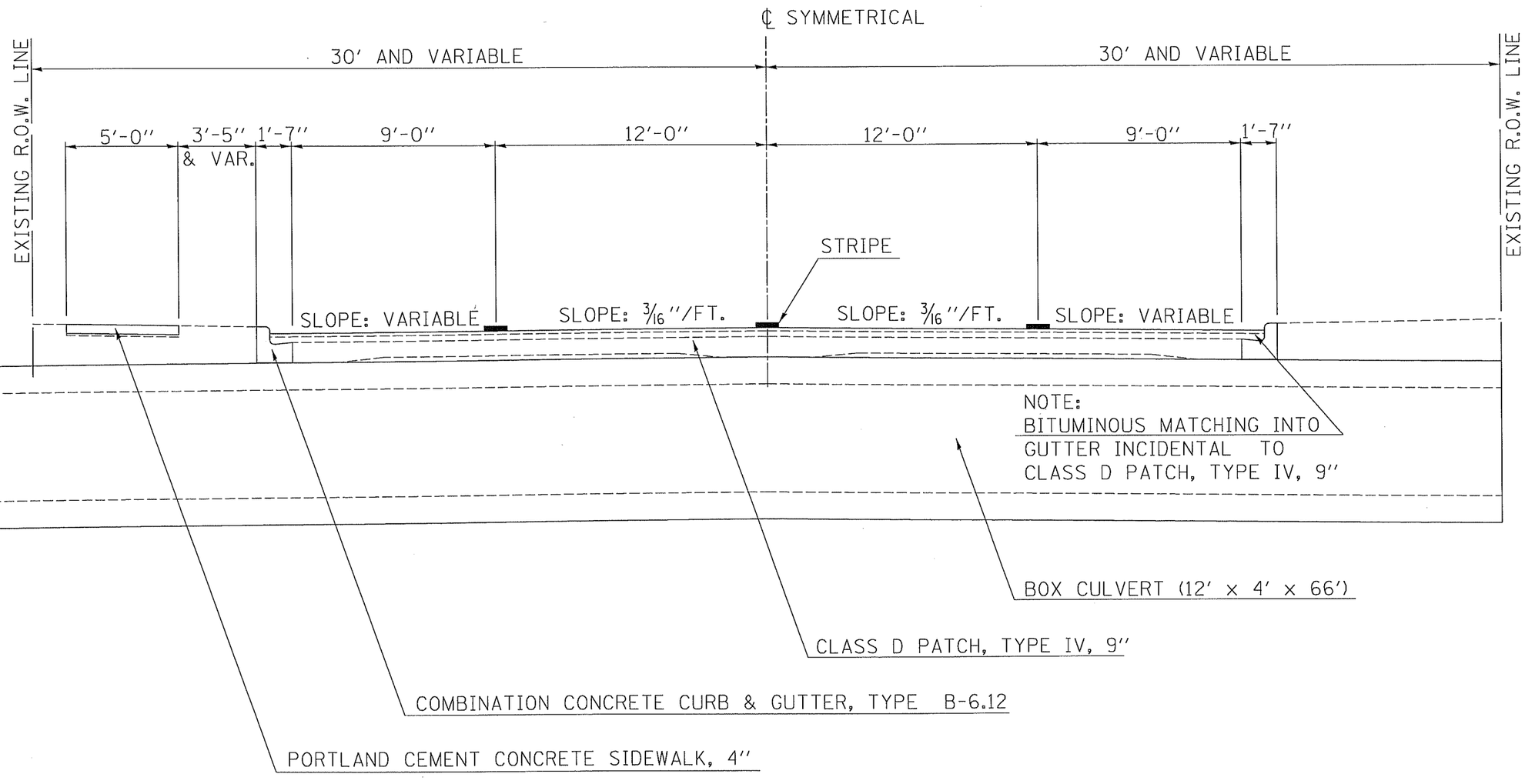

c:\projects\d50ll05 (v8)\typicals.dgn

F.A.P. RTE.	SECTION	COUNTY	TOTAL SHEETS	SHEET NO.
332	48B	VERMILION	27	11

CONTRACT NO. 70462

SCHEDULE OF QUANTITIES

TEMPORARY DITCH CHECKS

CHANNEL LOCATION	EACH
12+50	1
14+00	1
15+50	1
17+00	1
TOTAL	4

INLET & PIPE PROTECTION

ILL 1 LOCATION	OFFSET	EACH
824+77	34.0' RT	1

REMOVAL OF EXISTING STRUCTURE

ILL 1 LOCATION	EACH
824+77	1

NAME PLATES

ILL 1 LOCATION	EACH
824+77	1

BOX CULVERT END SECTION

ILL 1 LOCATION	OFFSET	EACH
824+77	34.0' RT	1
824+77	32.0' LT	1
	TOTAL	2

POROUS GRANULAR BACKFILL

ILL 1	STATION	TO	STATION	VOLUME (CU. YD.)
	824+61		824+66	53.88
	824+66		824+70	64.92
	824+84		824+88	64.92
	824+88		824+93	53.88
			TOTAL	237.6
			USE	238

PRECAST CONCRETE BOX CULVERT 12' X 4' (M273)

ILL 1 LOCATION	ILL 1 LOCATION	SIZE (FOOT)	LENGTH (FOOT)
824+77 32.0' LT	824+77 34.0' RT	12' X 4'	66.0

CHANNEL EXCAVATION

CHANNEL	STATION	TO	STATION	VOLUME (CU. YD.)
	10+50		16+50	1219

EXPLORATION TRENCH 52" DEPTH

ILL 1	STATION	TO	STATION	OFFSET	LENGTH (FEET)
	824+52		825+02	34.0' RT	50.0
	824+52		825+02	32.0' LT	50.0
				TOTAL	100.0

COMBINATION CURB AND GUTTER REMOVAL

ILL 1	STATION	TO	STATION	OFFSET	LENGTH (FEET)
	824+60		824+94	21' RT	34.0
	824+60		824+94	21' LT	34.0
				TOTAL	68.0

SIDEWALK REMOVAL

ILL 1	STATION	TO	STATION	OFFSET	AREA (SQ. FT.)
	824+60		824+94	27' LT	170

F.A.P. RTE.	SECTION	COUNTY	TOTAL SHEETS	SHEET NO.
332	48B	VERMILION	27	12

CONTRACT NO. 70462

SCHEDULE OF QUANTITIES

TREE PLANTING

CHANNEL	STATION	TO	STATION	TREE, FAGUS SYLVATICA, EUROPEAN BEECH, 1-1/2" BALLED AND BURLAPPED (EACH)	TREE, ACER SACCHARUM (SUGAR MAPLE), 3" CALIPER, BALLED AND BURLAPPED (EACH)	TREE, QUERCUS PALUSTRIS (PIN OAK), 2-1/2" CALIPER, BALLED AND BURLAPPED (EACH)	TREE, QUERCUS RUBRA (RED OAK), 2-1/2" CALIPER, BALLED AND BURLAPPED (EACH)	TREE, FRAXINUS PENNSYLVANICA SUMMIT (SUMMIT GREEN ASH), 3" CALIPER, BALLED AND BURLAPPED (EACH)
	10+00		17+00	2	2	1	1	2

SEEDING

CHANNEL	STATION	TO	STATION	SEEDING, CLASS 4B (ACRE)	NITROGEN FERTILIZER NUTRIENT (POUND)	PHOSPHORUS FERTILIZER NUTRIENT (POUND)	POTASSIUM FERTILIZER NUTRIENT (POUND)	MULCH, METHOD 2 (ACRE)	TEMPORARY EROSION CONTROL SEEDING (POUND)
	10+00		17+00	0.5	45.0	45.0	45.0	0.5	50.0
			TOTAL	0.5	45.0	45.0	45.0	0.5	50.0

SHORT - TERM PAVEMENT MARKING

ILL 1	STATION	TO	STATION	LENGTH	4" WHITE (FOOT)	4" SKIP DASH YELLOW (FOOT)	4" NO PASSING YELLOW (FOOT)
	824+60		824+94	34	8	4	0
				SUB -TOTALS	8	4	0

TOTAL = 12 FOOT

PAINT PAVEMENT MARKING - LINE 4"

ILL 1	STATION	TO	STATION	LENGTH	4" WHITE (FOOT)	4" SKIP DASH YELLOW (FOOT)	4" NO PASSING YELLOW (FOOT)
	824+60		824+94	34	68	9	0
				SUB -TOTALS	68	9	0

TOTAL = 77 FOOT

TEMPORARY PAVEMENT MARKING - LINE 4"

ILL 1	STATION	TO	STATION	LENGTH	4" WHITE (FOOT)	4" SKIP DASH YELLOW (FOOT)	4" NO PASSING YELLOW (FOOT)
	824+60		824+94	34	68	9	0
				SUB -TOTALS	68	9	0

TOTAL = 77 FOOT

3/23/2006

F.A.P. RTE.	SECTION	COUNTY	TOTAL SHEETS	SHEET NO.
332	48B	VERMILION	27	13

CONTRACT NO.

RECOVERY TIE POINTS

T.S. #400 - STA. 824+56.54
26.7' RT.

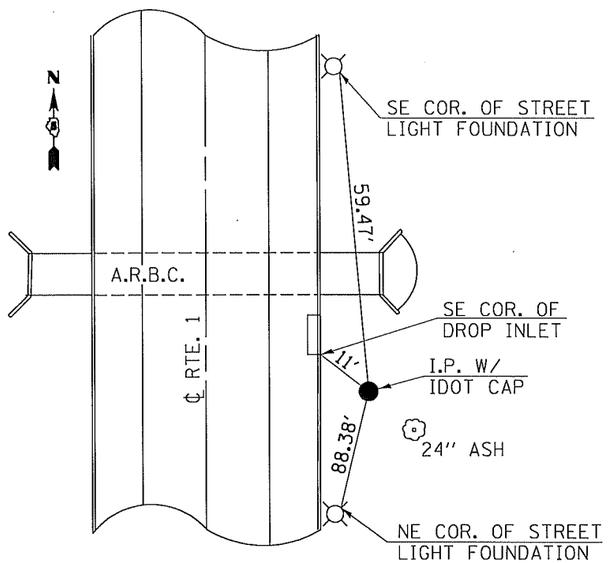

T.S. #401 - STA. 833+85.80
21.1' RT.

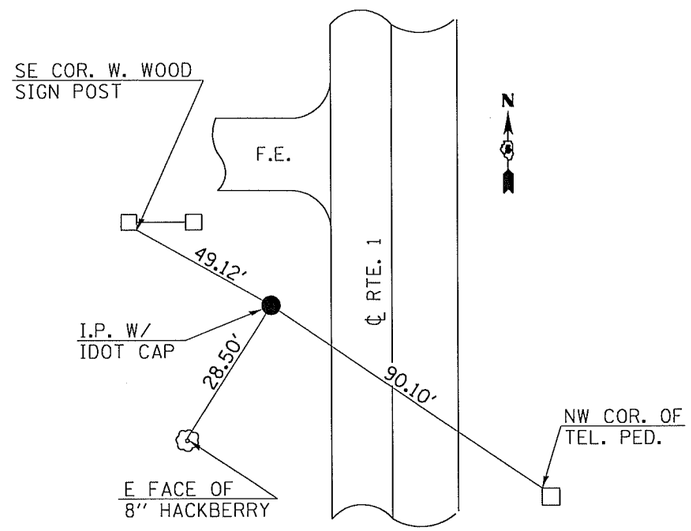

P.O.T. #1 - STA. 814+00

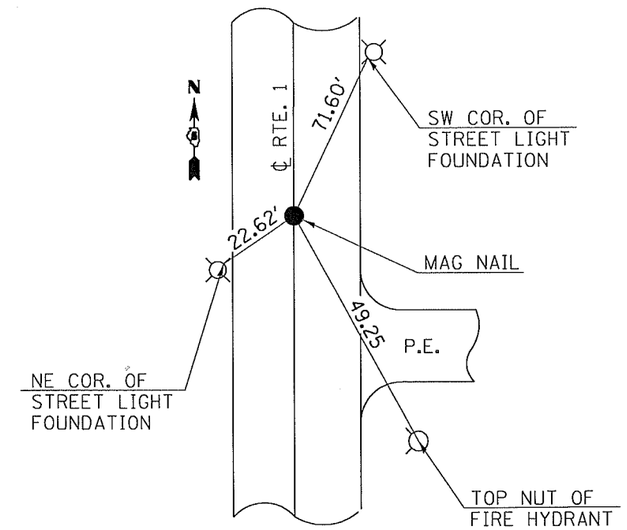

P.O.T. #3 - STA. 824+77.38

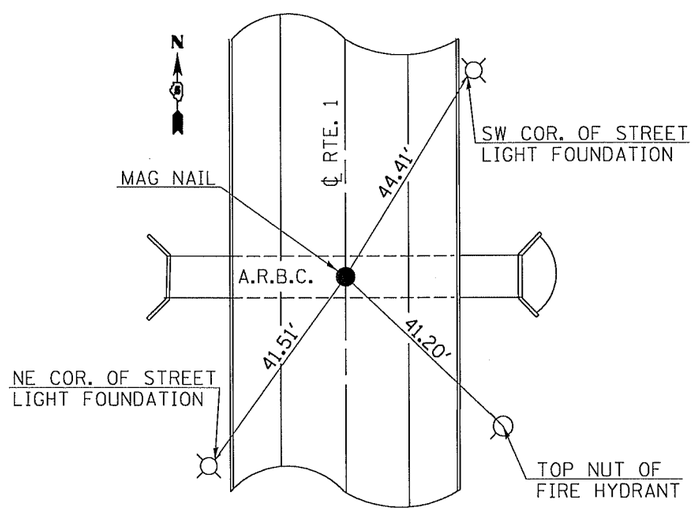

P.O.T. #5 - STA. 835+13.91

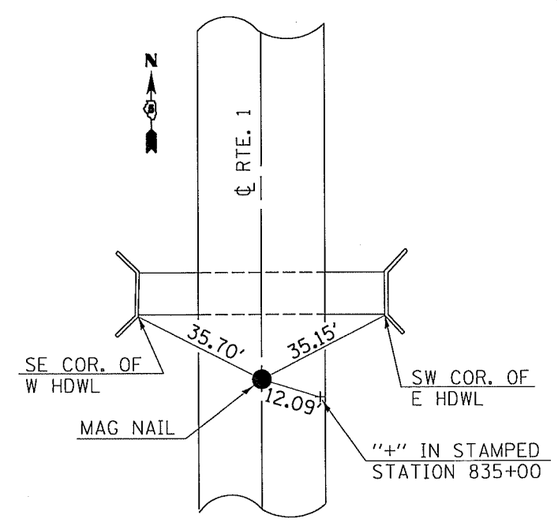

c:\projects\d501105 (v8)\details.dgn

3/23/2006

F.A.P RTE.	SECTION	COUNTY	TOTAL SHEETS	SHEET NO.
332	4BB	VERMILION	27	14
STA. 822+00		TO STA. 828+00		
FED. ROAD DIST. NO.	ILLINOIS	FED. AID PROJECT		

CONTRACT NO. 70462

1"=20'

0' 5' 10' 15' 20' 40' 60'

SEC. 11, T. 22 N., R. 12 W., 2ND. P.M.

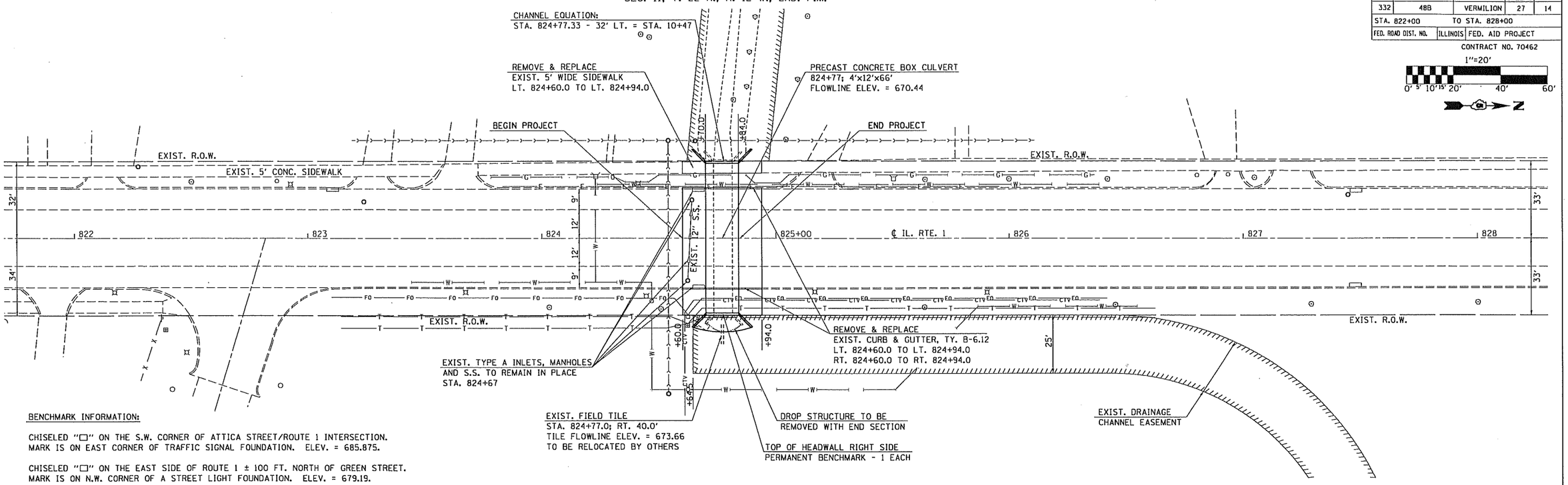

BENCHMARK INFORMATION:

CHISELED "□" ON THE S.W. CORNER OF ATTICA STREET/ROUTE 1 INTERSECTION.
MARK IS ON EAST CORNER OF TRAFFIC SIGNAL FOUNDATION. ELEV. = 685.875.

CHISELED "□" ON THE EAST SIDE OF ROUTE 1 ± 100 FT. NORTH OF GREEN STREET.
MARK IS ON N.W. CORNER OF A STREET LIGHT FOUNDATION. ELEV. = 679.19.

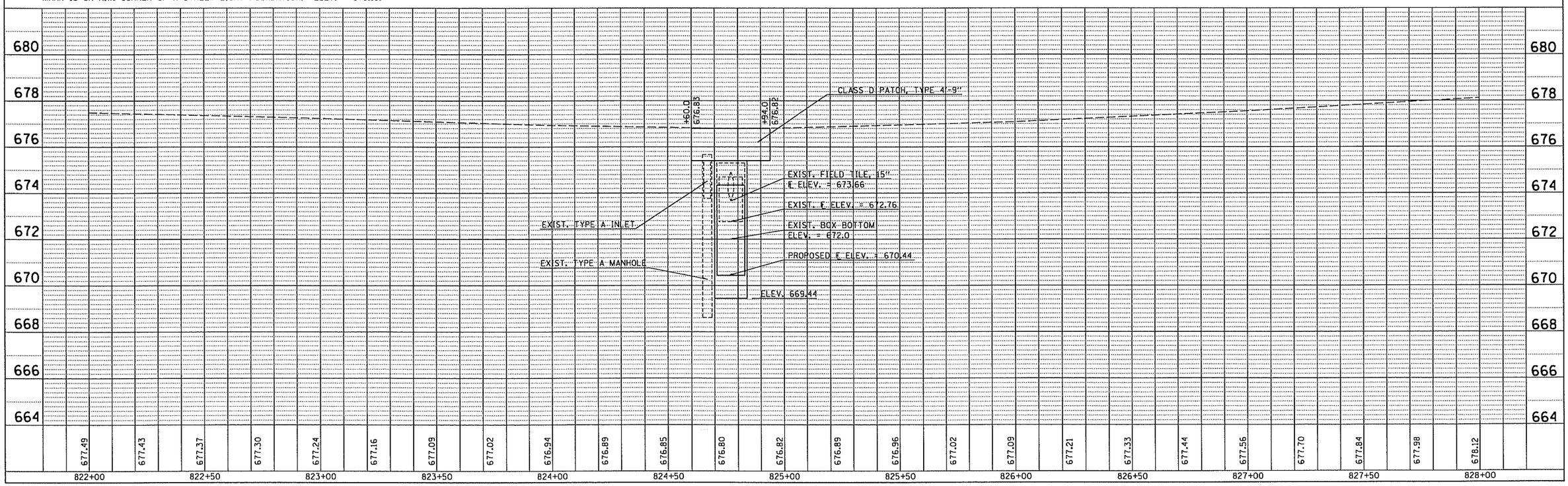

PLAN
NOTE BOOK NO.
SURVEYED
PLOTTED
ALIGNMENT CHECKED
RUNOVER CHECKED
CADD FILE NAME
BY
DATE

PROFILE
NOTE BOOK NO.
SURVEYED
PLOTTED
GRADES CHECKED
B.M. NOTED
STRUCTURE NOTATIONS CH'KD
BY
DATE

c:\projects\d501105 (v8)\20plan.dgn

3/29/2006

DETAIL OF BOX CULVERT END SECTION STA. 824+77-34' RT.
(UPSTREAM SIDE)

F.A.P. RTE.	SECTION	COUNTY	TOTAL SHEETS	SHEET NO.
332	48B	VERMILION	27	15

CONTRACT NO. 70462

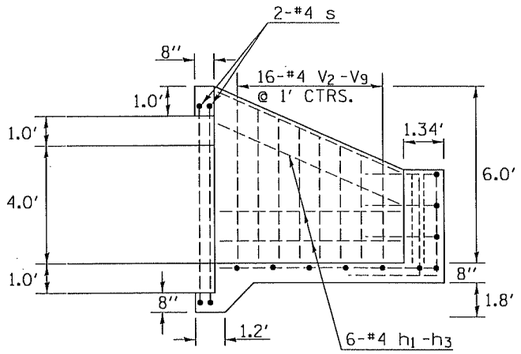

SECTION A-A

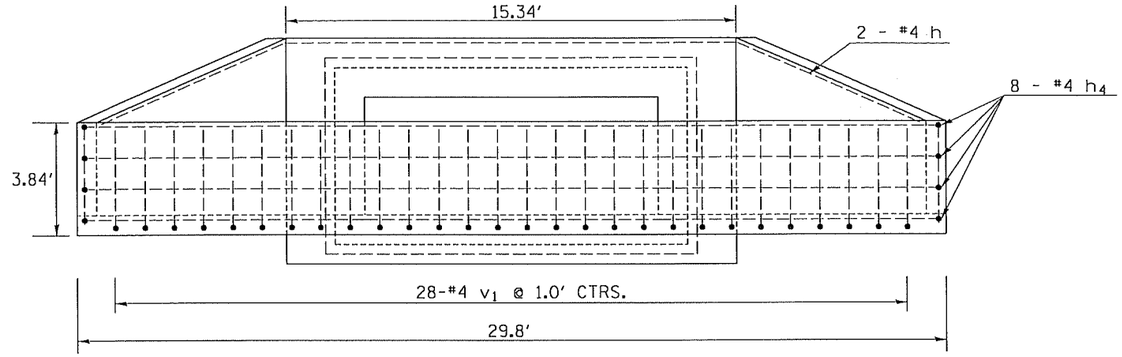

END VIEW

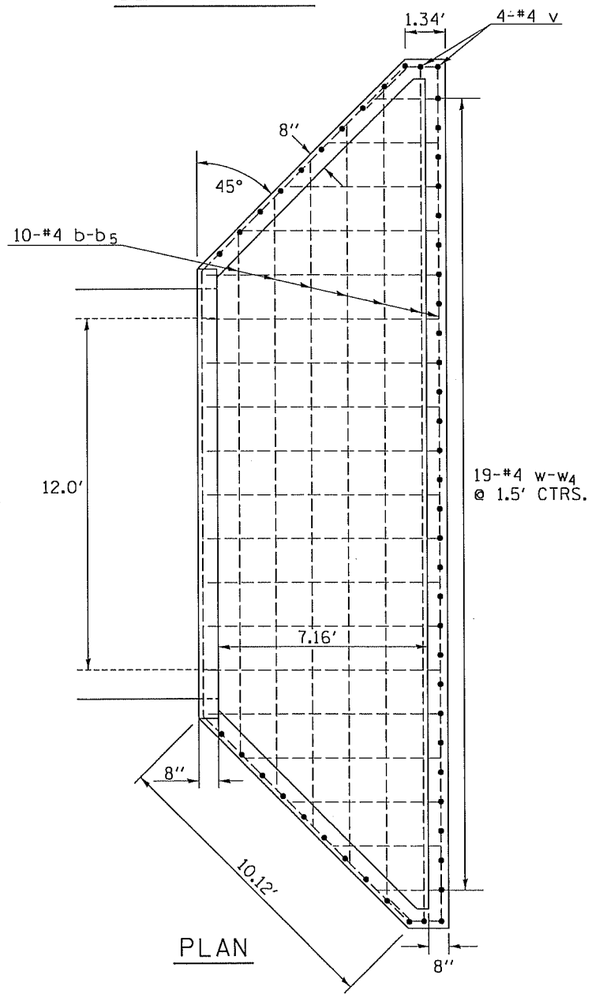

PLAN

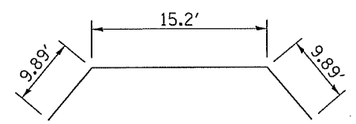

BAR h

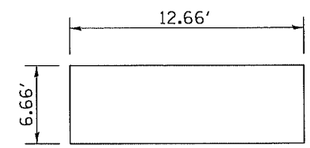

BAR s

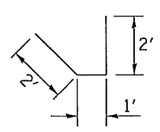

BAR h_4

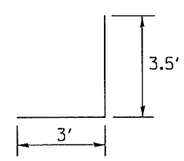

BAR v_1

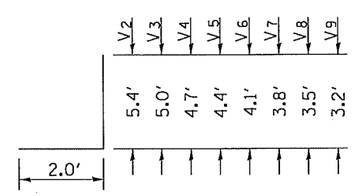

BARS v_1, v_2, v_3, ETC.

BILL OF MATERIALS (ONE HEADWALL)

BAR	No.	SIZE	LENGTH (ft)	SHAPE
b	1	#4	17.7	
b1	1	#4	20.2	
b2	1	#4	22.7	
b3	1	#4	25.2	
b4	1	#4	27.7	
b5	5	#4	29.3	
h	2	#4	35.0	
h1	2	#4	9.6	
h2	2	#4	9.3	
h3	2	#4	9.3	
h4	8	#4	5.0	
s	2	#4	38.6	
v	4	#4	3.5	
v1	28	#4	6.5	
v2	2	#4	7.4	
v3	2	#4	7.0	
v4	2	#4	6.7	
v5	2	#4	6.4	
v6	2	#4	6.1	
v7	2	#4	5.8	
v8	2	#4	5.5	
v9	2	#4	5.2	
w	11	#4	8.1	
w1	2	#4	6.7	
w2	2	#4	5.2	
w3	2	#4	3.7	
w4	2	#4	2.2	
Reinforcement Bars			LB.	620.0
Class SI Conc. Hdwall.			CU. YD.	10.6

ITEM	UNIT	QUANT.
Box Culvert End Sections	EACH	1

NOTES

- All bars should be rounded and shall conform to the requirments of Art. 1006.10 of Standard Specs.
- Class SI Concrete shall be used throughtout.
- The Precast Concrete Box Culvert Sections shall conform to the requirments of AASHTO M273.
- All dimensions are in FEET (ft) unless otherwise noted.
- Concrete and Rebar quantities and lengths calculated for the cast-in-place End Sections will vary based on the precast box culverts supplied.
- End Sections will be paid for at the contract unit price each for BOX CULVERT END SECTIONS, as outlined in Art. 540.08, which prices shall include all concrete, rebar, and all other items necessary to complete the proposed work.

BOX CULVERT END SECTIONS (CAST IN PLACE)
12' x 4' (NO SKEW)
STA. 824+77-34' RT. (UPSTREAM SIDE)
PROPOSED STRUCTURE NO. 092-8620

c:\projects\d50ll05 (v8)\details.dgn

3/24/2006

DETAIL OF BOX CULVERT END SECTION STA. 824+77-32' LT.
(DOWNSTREAM SIDE)

F.A.P. RTE.	SECTION	COUNTY	TOTAL SHEETS	SHEET NO.
332	48B	VERMILION	27	16

CONTRACT NO. 70462

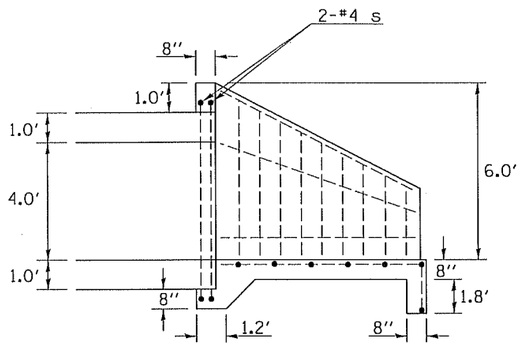

SECTION A-A

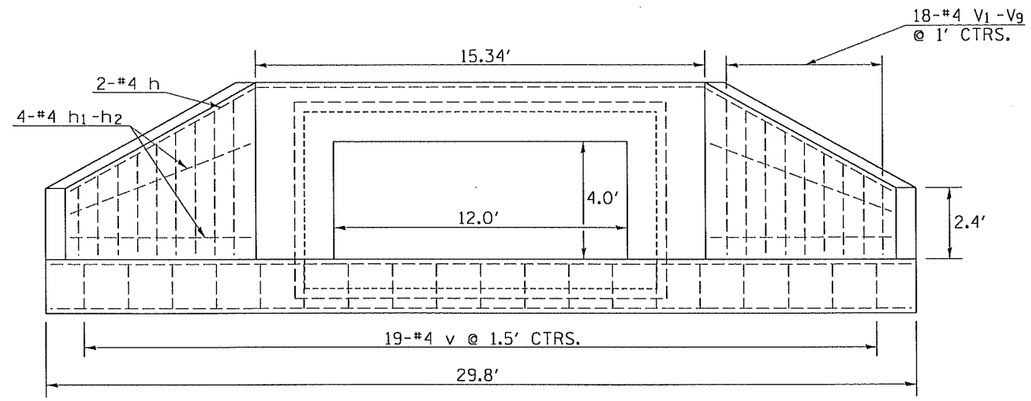

END VIEW

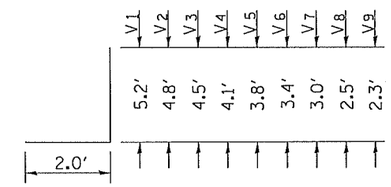

BARS V_1, V_2, V_3, ETC.

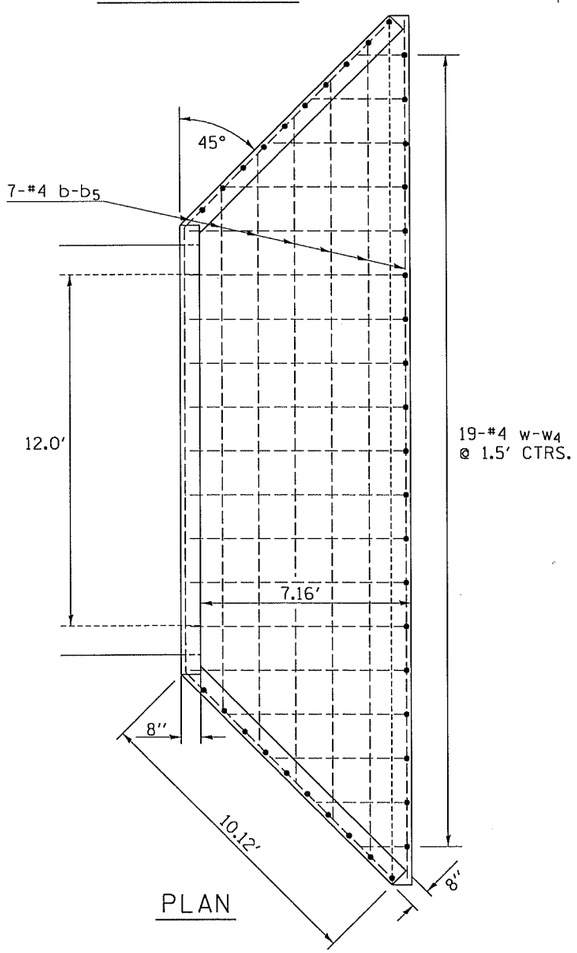

PLAN

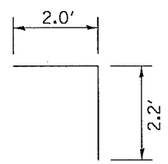

BAR v

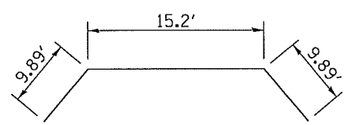

BAR h

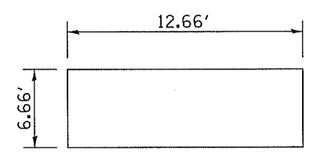

BAR s

STATION 824+77
BUILT 2006 BY
STATE OF ILLINOIS
F.A.P. RTE. 332, SEC. 48B
LOADING HS 20
STR. NO. 092-8620

NAME PLATE
SEE STD. 515001

BILL OF MATERIALS (ONE HEADWALL)

BAR	No.	SIZE	LENGTH (ft)	SHAPE
b	1	#4	17.7	
b1	1	#4	20.2	
b2	1	#4	22.7	
b3	1	#4	25.2	
b4	1	#4	27.7	
b5	2	#4	29.3	
h	2	#4	35.0	
h1	2	#4	9.6	
h2	2	#4	9.3	
s	2	#4	38.6	
v	19	#4	4.2	
v1	2	#4	7.2	
v2	2	#4	6.8	
v3	2	#4	6.5	
v4	2	#4	6.1	
v5	2	#4	5.8	
v6	2	#4	5.4	
v7	2	#4	5.0	
v8	2	#4	4.6	
v9	2	#4	4.3	
w	11	#4	7.5	
w1	2	#4	6.1	
w2	2	#4	4.6	
w3	2	#4	3.1	
w4	2	#4	1.6	
Reinforcement Bars			LB.	440.0
Class SI Conc. Hdwall.			CU. YD.	8.5

ITEM	UNIT	QUANT.
Box Culvert End Sections	EACH	1

NOTES

- All bars should be rounded and shall conform to the requirments of Art. 1006.10 of Standard Specs.
- Class SI Concrete shall be used throughtout.
- The Precast Concrete Box Culvert Sections shall conform to the requirments of AASHTO M273.
- All dimensions are in FEET (ft) unless otherwise noted.
- Concrete and Rebar quantities and lengths calculated for the cast-in-place End Sections will vary based on the precast box culverts supplied.
- End Sections will be paid for at the contract unit price each for BOX CULVERT END SECTIONS, as outlined in Art. 540.08, which prices shall include all concrete, rebar, and all other items necessary to complete the proposed work.

BOX CULVERT END SECTIONS (CAST IN PLACE)
12' x 4' (NO SKEW)
STA. 824+77-32' LT. (DOWNSTREAM SIDE)
PROPOSED STRUCTURE NO. 092-8620

c:\projects\d50ll05 (v8)\details.dgn

F.A.P. RTE.	SECTION	COUNTY	TOTAL SHEETS	SHEET NO.
332	48B	VERMILION	27	17

CONTRACT NO. 70462

POROUS GRANLUAR BACKFILL PAY LIMITS DETAIL

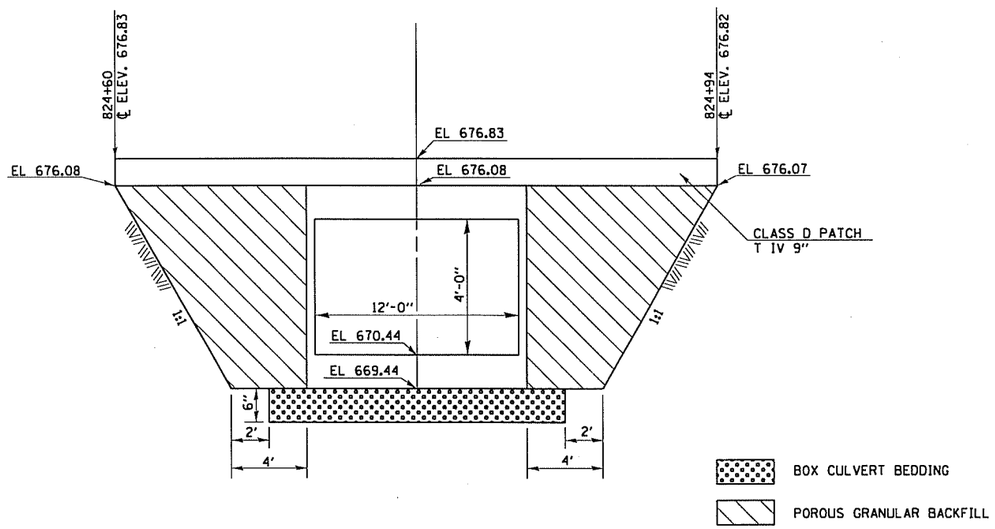

DETAIL OF DEPRESSING GUTTER GRADE AT INLETS, CATCH BASINS AND MANHOLES

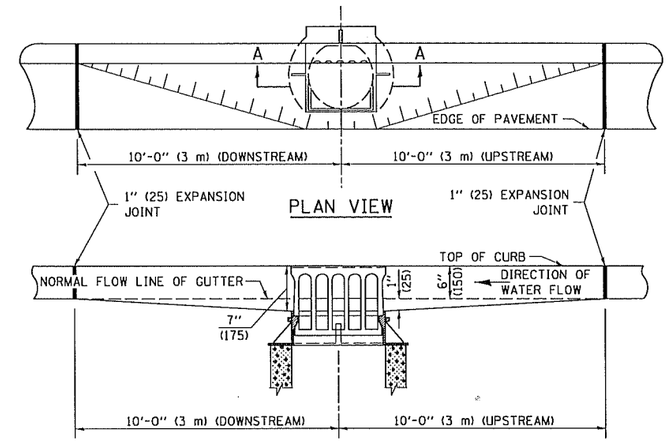

SECTION A-A

GENERAL NOTES

1. THE TWO EXPANSION JOINTS SHALL BE PLACED AS SHOWN IN STANDARD 606001.
2. THE GUTTER GRADE SHALL BE DEPRESSED AT ALL INLETS, CATCH BASINS AND MANHOLES UNLESS OTHERWISE SPECIFIED IN THE PLANS.
3. THE COST OF THIS WORK SHALL BE INCLUDED IN THE COST OF THE VARIOUS PAY ITEMS OF WORK INVOLVED.

	NAME	DATE	REVISIONS	
DESIGNED	J.M.H.	11/87	NAME	DATE
CHECKED	F.M.S.	11/87	D.L.P.	10/96
CADD NO.	A-1.33		K.A.G.	06/03

ALL DIMENSIONS ARE IN INCHES (MILLIMETERS) UNLESS OTHERWISE SHOWN.

F.A.P. RTE.	SECTION	COUNTY	TOTAL SHEETS	SHEET NO.
332	48B	VERMILION	27	18

CONTRACT NO. 70462

DETAIL FOR TREATMENT OF EXISTING FIELD TILE SYSTEMS

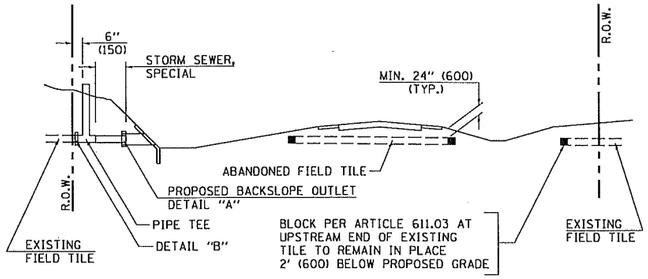

METHOD 'A' (2 LANE)

STORM SEWER FLOW LINE ABOVE PROPOSED DITCH FLOW LINE

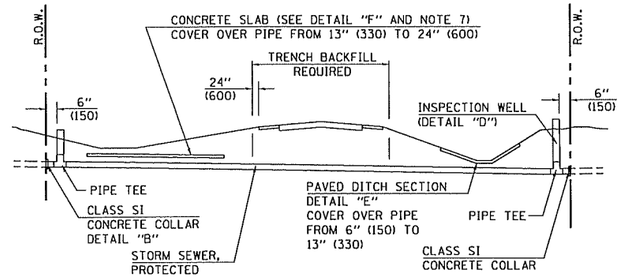

METHOD 'B' (2 LANE)

STORM SEWER LESS THAN 2' (600 mm) BELOW DITCH FLOW LINE AND STORM SEWERS CROSSING UNDER PAVEMENT AND PAVED DITCH

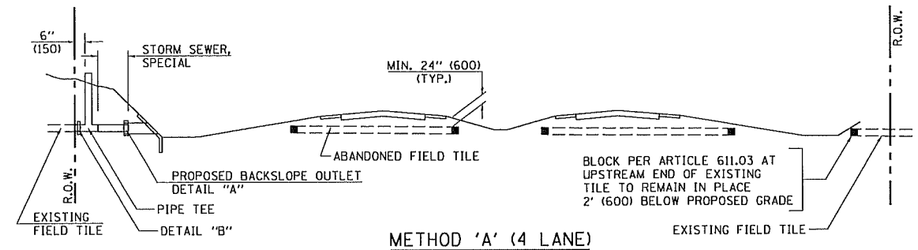

METHOD 'A' (4 LANE)

STORM SEWER FLOW LINE ABOVE PROPOSED DITCH FLOW LINE

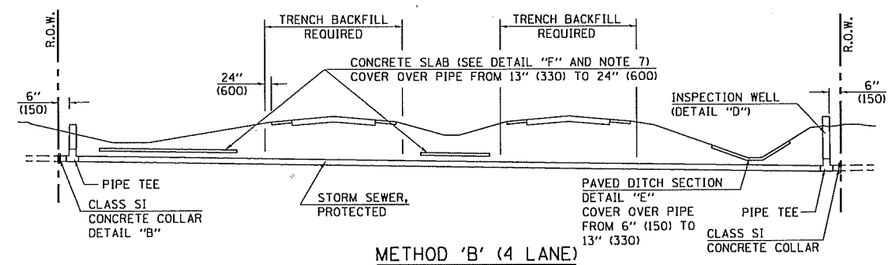

METHOD 'B' (4 LANE)

STORM SEWER LESS THAN 2' (600 mm) BELOW DITCH FLOW LINE AND STORM SEWERS CROSSING UNDER PAVEMENTS AND PAVED DITCHES

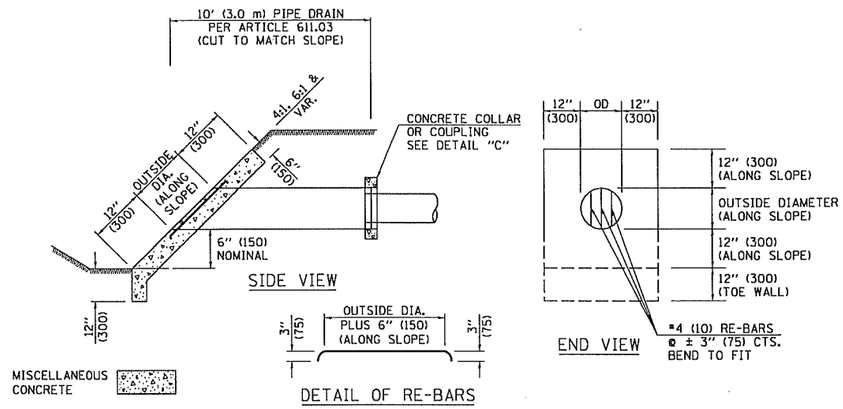

HEADWALL FOR BACKSLOPE OUTLET

DETAIL "A"

CONCRETE PIPE STANDARD SIZES	
STORM SEWER	RISER
6" (150)	6" (150)
8" (200)	6" (150)
10" (250)	8" (200)
12" (300)	10" (250)
OR GREATER	

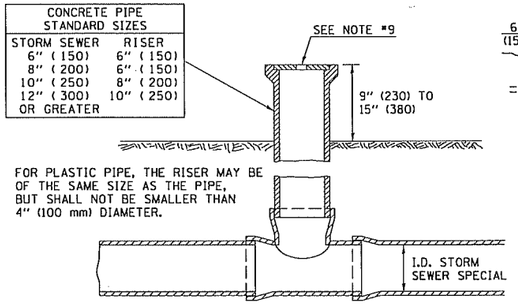

INSPECTION WELL

DETAIL "D"

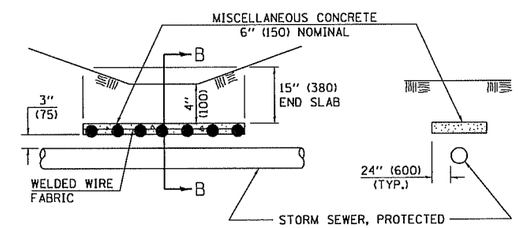

CONCRETE SLAB

DETAIL "F"

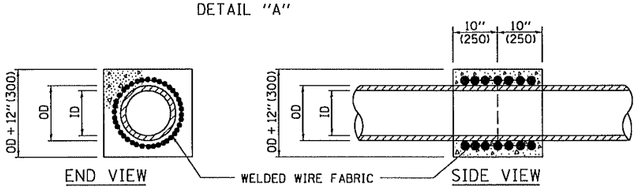

CONCRETE COLLAR

DETAIL "B"

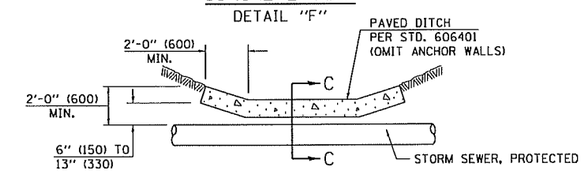

PAVED DITCH ELEVATION

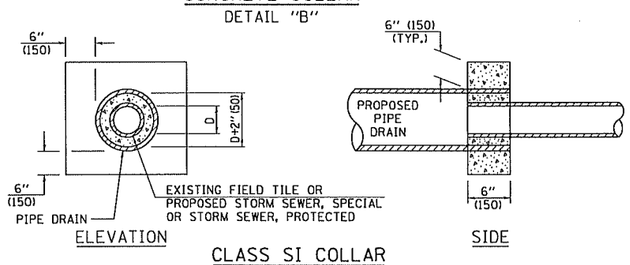

CLASS SI COLLAR

DETAIL "C"

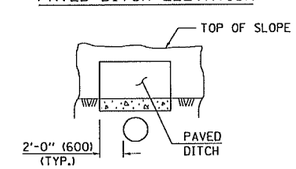

SECTION C-C

PAVED DITCH

DETAIL "E"

GENERAL NOTES

1. EXISTING FIELD TILE ENCOUNTERED BY EXPLORATION TRENCH SHALL BE INSPECTED BY THE ENGINEER FOR UNOBSTRUCTED FLOW WITHIN THE LIMITS OF THE RIGHT-OF-WAY.
2. ONLY FIELD TILE THAT DOES NOT HAVE SATISFACTORY FLOW AND OR HAS VISIBLE SIGNS OF DETERIORATION (SINK HOLES, ETC.) SHALL BE REPLACED WITHIN THE LIMITS OF THE RIGHT-OF-WAY IN ACCORDANCE WITH METHOD "B".
3. INSPECTION WELLS SHALL BE CONSTRUCTED APPROXIMATELY 6" (150 mm) INSIDE OF BOTH RIGHT-OF-WAY LINES AT ALL FIELD TILE LOCATIONS.
4. EXISTING FIELD TILE ABANDONED UNDER EXISTING PAVEMENTS OR PAVED SHOULDERS SHALL BE FILLED WITH FLOWABLE GROUT AS DIRECTED BY THE ENGINEER. THIS WORK WILL BE PAID FOR ACCORDING TO ARTICLE 109.04.
5. NON-CIRCULAR FIELD TILE SHALL BE REPLACED WITH STORM SEWER, SPECIAL OF AT LEAST THE SAME CROSS SECTIONAL AREA. ALL EXISTING FIELD TILE SHALL BE REPLACED WITH STORM SEWER OF THE TYPE REQUIRED FOR THE MINIMUM DEPTH OF COVER.
6. THE 6" (150 mm) CONCRETE SLAB OR DITCH LINING SHALL BE POURED THE LENGTH OF THE TRENCH AT ALL DITCH FLOW LINE LOCATIONS WITHIN THE RIGHT-OF-WAY WITH LESS THAN 2' (600 mm) OF EARTH COVER. MISCELLANEOUS CONCRETE SHALL BE USED ACCORDING TO SECTION 611.
7. ALL MISCELLANEOUS SLABS, APRONS AND DITCH LININGS SHALL BE REINFORCED WITH WELDED WIRE FABRIC AS SHOWN FOR PAVED DITCH IN STANDARD 606401.
8. HEADWALL FOR BACKSLOPE OUTLET MAY BE USED FOR PIPE DRAIN DIAMETERS UP TO 10" (250 mm). SPECIAL DESIGNS WILL BE REQUIRED FOR LARGER SIZES.
9. THE INSPECTION WELL LID FOR P.C.C. PIPE SHALL BE CONSTRUCTED OF 3/8" (10 mm) CAST IRON AND PROVIDED WITH A 1" (25 mm) DIAMETER HOLE IN CENTER. THE LID FOR THE OTHER PIPE MATERIALS SHALL BE A GRATE ASSEMBLY PREFABRICATED FOR AND COMPATIBLE WITH THE PIPE SYSTEM.

	NAME	DATE	REVISIONS	
DESIGNED	D.L.P.	12/98	NAME	DATE
CHECKED	S.A.C.	12/98	K.G.	07/02
CADD NO.	A-18.02		K.A.G.	06/03

ALL DIMENSIONS ARE IN INCHES (MILLIMETERS) UNLESS OTHERWISE SHOWN.

F.A.P. RTE.	SECTION	COUNTY	TOTAL SHEETS	SHEET NO.
332	48B	VERMILION	27	19

CONTRACT NO. 70462

TYPICAL APPLICATIONS OF PAVEMENT MARKINGS AND MARKERS

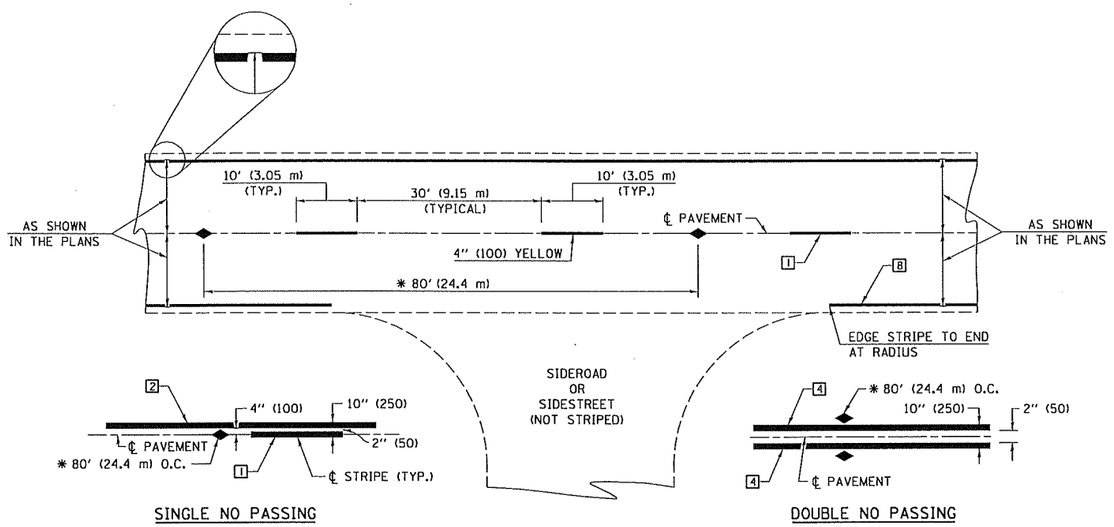

* REDUCE TO 40' (12.2 m) O.C. ON CURVES WITH POSTED OR ADVISORY SPEEDS OF 45 mph (70 km/h) OR LESS.

TYPICAL PAVEMENT MARKING LEGEND

1. 4" (100) SKIP-DASH (YELLOW) — 10' (3.05 m), 30' (9.15 m), 10' (3.05 m)
2. 4" (100) SOLID (YELLOW) — 45°, 12" (300), TRAFFIC
3. 12" (300) DIAGONAL (YELLOW) — TRAFFIC
4. 4" (100) DOUBLE YELLOW (NARROW) — 2" (50), 6" (150) CTS.
5. RESERVED
6. RESERVED
7. 4" (100) SKIP-DASH (WHITE) — 10' (3.05 m), 30' (9.15 m), 10' (3.05 m)
8. 4" (100) SOLID (WHITE) — TRAFFIC, 45°, 12" (300)
9. 12" (300) DIAGONAL (WHITE) — 45°, 12" (300), TRAFFIC
10. 6" (150) CROSS WALK (WHITE)
11. 24" (600) STOP BAR (WHITE)
12. 8" (200) SOLID (WHITE)
13. 4" (100) LANE LINE EXTENSIONS (WHITE) — 24" TYP. (610), 4' TYP. (1.22 m), 24" TYP. (610)
14. 4" (100) PARKING WHITE — 24" (610), 12" (300), 12" (300)

TYPICAL PAVEMENT MARKERS LEGEND

- ◆ TWO-WAY AMBER MARKER
- ▶ ONE-WAY AMBER MARKER
- ▷ ONE-WAY CRYSTAL MARKER

DETAIL OF RURAL LEFT TURN LANE

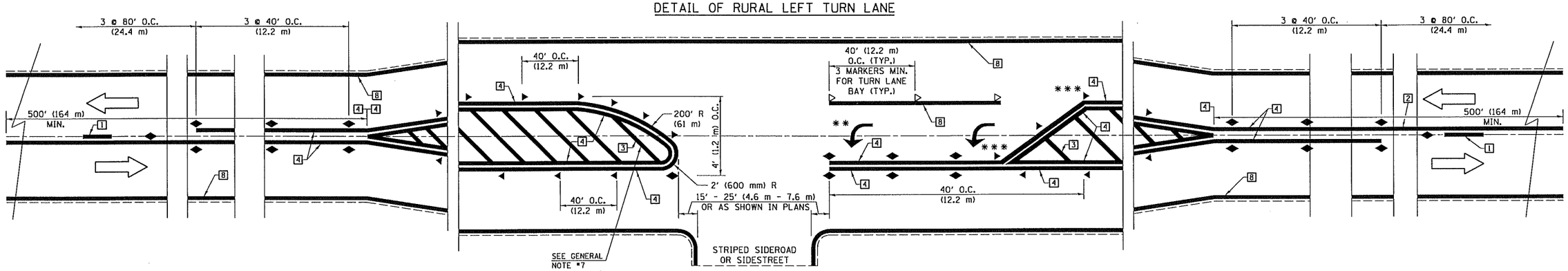

*** REDUCE SPACING IF NECESSARY TO ASSURE MARKERS AT CORNER POINTS.

** TURN ARROWS SHALL BE PLACED AS SHOWN ON SHEET #2.

SHEET 1 OF 4

	NAME	DATE	REVISIONS	
DESIGNED	J.M.H.	5/85 6/88	NAME	DATE
CHECKED	FMS CTO	6/85 6/88	GEOMETRICS/K.A.G.	07/02
CADD NO.	F-5.25		K.A.G.	09/05

ALL DIMENSIONS ARE IN INCHES (MILLIMETERS) UNLESS OTHERWISE SHOWN.

F.A.P. RTE.	SECTION	COUNTY	TOTAL SHEETS	SHEET NO.
332	4BB	VERMILION	27	20

CONTRACT NO. 70462

TYPICAL APPLICATIONS OF PAVEMENT MARKINGS AND MARKERS

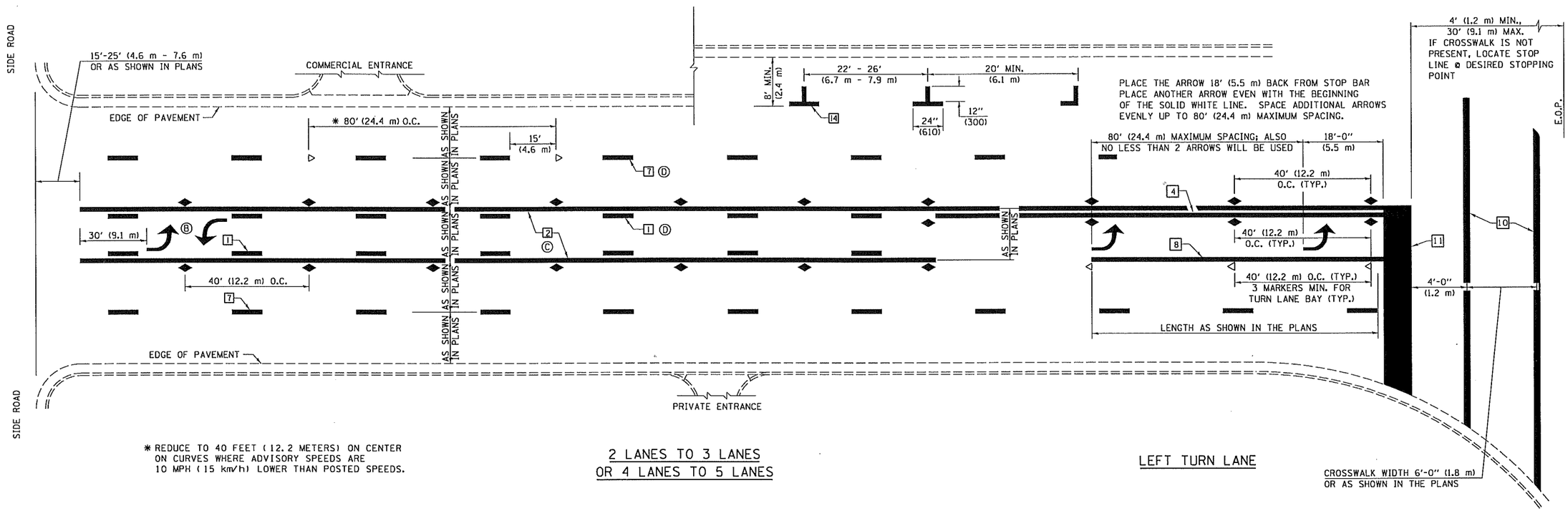

* REDUCE TO 40 FEET (12.2 METERS) ON CENTER ON CURVES WHERE ADVISORY SPEEDS ARE 10 MPH (15 km/h) LOWER THAN POSTED SPEEDS.

2 LANES TO 3 LANES
OR 4 LANES TO 5 LANES

LEFT TURN LANE

SHEET 2 OF 4

	NAME	DATE	REVISIONS	
DESIGNED	J.M.H.	5/85 6/88	NAME	DATE
CHECKED	FMS CTD	6/85 6/88	GEOMETRICS/K.A.G.	07/02
CADD NO.	F-5.25		K.A.G.	09/05

ALL DIMENSIONS ARE IN INCHES (MILLIMETERS) UNLESS OTHERWISE SHOWN.

F.A.P. RTE.	SECTION	COUNTY	TOTAL SHEETS	SHEET NO.
332	48B	VERMILION	27	21

CONTRACT NO. 70462

TYPICAL APPLICATIONS OF PAVEMENT MARKINGS AND MARKERS

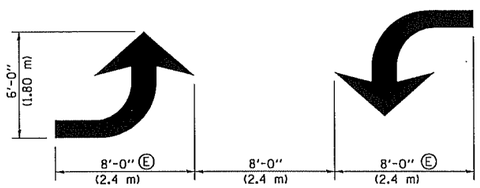

TYPICAL DOUBLE TURN ARROWS (WHITE)

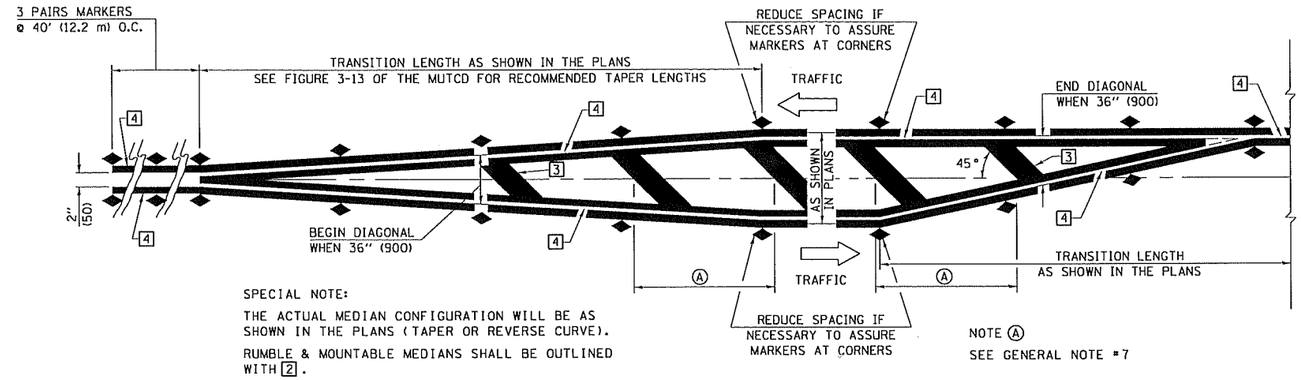

SPECIAL NOTE:

THE ACTUAL MEDIAN CONFIGURATION WILL BE AS SHOWN IN THE PLANS (TAPER OR REVERSE CURVE).

RUMBLE & MOUNTABLE MEDIANS SHALL BE OUTLINED WITH [2].

TYPICAL MEDIAN TRANSITIONS

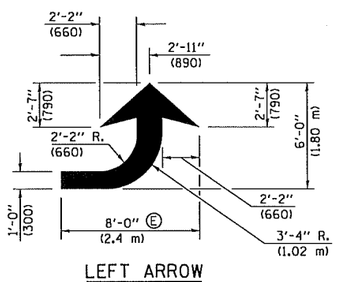

LEFT ARROW

REVERSE FOR RIGHT ARROW
AREA = 15.6 SQ. FT. (1.47 m^2)
(WHITE)

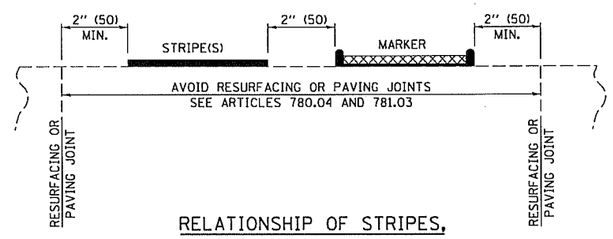

RELATIONSHIP OF STRIPES, MARKERS AND JOINTS

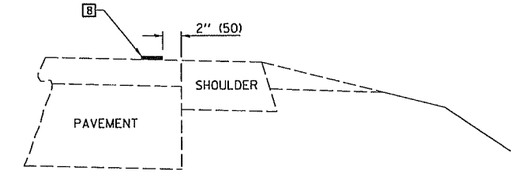

RELATIONSHIP OF EDGE STRIPE TO SAFETY SHOULDER OR PAVED SURFACE

SPECIAL NOTES:

Ⓑ TURN ARROW PAIRS SHALL BE PLACED AT 250' (75 m) INTERVALS AND SHALL BE EVENLY SPACED BETWEEN BOTH ENDS OF THE BIDIRECTIONAL LEFT TURN LANE.

Ⓒ THE SOLID YELLOW PAVEMENT MARKINGS [2] SHOULD GENERALLY START OR END NEAR THE RADIUS POINT OF EACH STREET RETURN EXCEPT WHERE ONE OR BOTH ENDS WOULD INCLUDE STOP BARS.

Ⓓ THE SKIP-DASH PAVEMENT MARKINGS [1] OR [7] SHOULD BE CENTERED BETWEEN BOTH ENDS OF EACH CITY BLOCK AND SHALL BE PLACED SO THEY LINE UP ACROSS FROM EACH OTHER. SEE EXAMPLE ON SHEET 2 OF 3.

Ⓔ TURN ARROW SIZE DEPENDS ON THE LOCATION.
RURAL LOCATION - LARGE ARROW SIZE
URBAN LOCATION - SMALL ARROW SIZE

GENERAL NOTES

1. WHEN MEDIANS ARE PRESENT, PAVEMENT MARKINGS ARE TO BE PLACED ADJACENT TO MEDIANS.
2. SCALE: NONE
3. SOME OF THE INFORMATION INCLUDED WITH THIS DETAIL MAY NOT BE APPLICABLE TO THIS IMPROVEMENT.
4. PAVEMENT MARKINGS ARE TO BE EXTENDED THROUGH OMISSIONS WHEN APPLICABLE.
5. A STRIPING KEY IS AVAILABLE ELSEWHERE AND SHALL BE SHOWN WHERE THE QUANTITIES ARE LISTED.
6. FINAL PAVEMENT MARKINGS SHALL BE IN PLACE PRIOR TO PLACING ANY RAISED REFLECTIVE PAVEMENT MARKERS.
7. THE FOLLOWING CRITERIA SHALL BE USED FOR SELECTING THE DIAGONAL PAVEMENT MARKING SPACING,
   <30 MPH USE 15' (<50 km/h USE 4.5 m)
   30-45 MPH USE 20' (50-75 km/h USE 6.0 m)
   >45 MPH USE 30' (>75 km/h USE 9.0 m)

SHEET 3 OF 4

	NAME	DATE	REVISIONS	
DESIGNED	J.M.H.	5/85 6/88	NAME	DATE
CHECKED	FWS CTD	6/85 6/88	GEOMETRICS/K.A.G.	07/02
CADD NO.	F-5.25		K.A.G.	09/05

ALL DIMENSIONS ARE IN INCHES (MILLIMETERS) UNLESS OTHERWISE SHOWN.

F.A.P. RTE.	SECTION	COUNTY	TOTAL SHEETS	SHEET NO.
332	48B	VERMILION	27	22

CONTRACT NO. 70462

TYPICAL APPLICATIONS OF PAVEMENT MARKINGS AND MARKERS

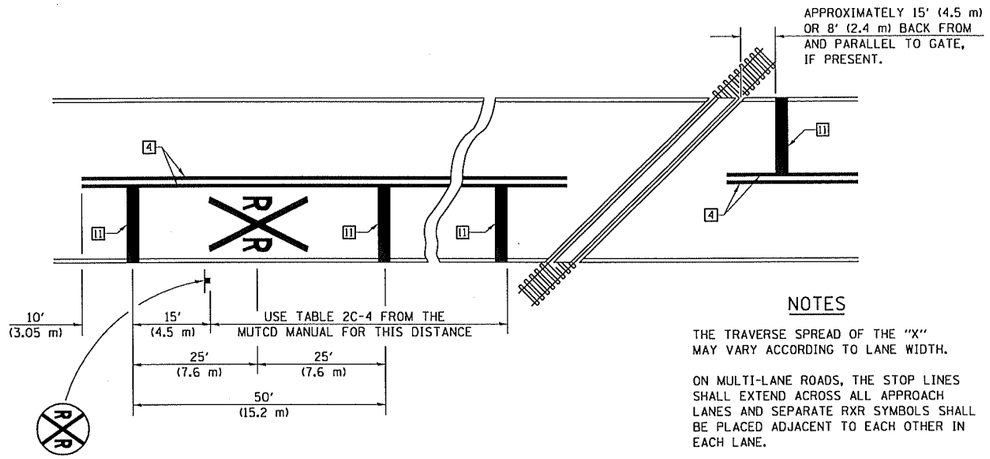

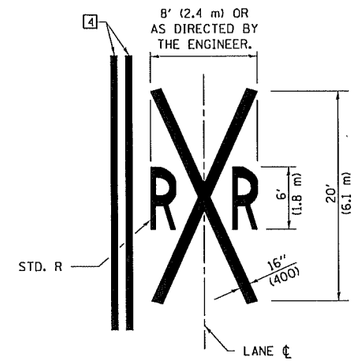

NOTES

THE TRAVERSE SPREAD OF THE "X" MAY VARY ACCORDING TO LANE WIDTH.

ON MULTI-LANE ROADS, THE STOP LINES SHALL EXTEND ACROSS ALL APPROACH LANES AND SEPARATE RXR SYMBOLS SHALL BE PLACED ADJACENT TO EACH OTHER IN EACH LANE.

WHEN THE PAVEMENT MARKING SYMBOL IS USED, A PORTION OF THE SYMBOL SHOULD BE LOCATED DIRECTLY ADJACENT TO THE ADVANCE WARNING SIGN (W10-1) AS PLACED BY TABLE II-1, CONDITION B OF THE MUTCD.

PAVEMENT MARKINGS AT RAILROAD-HIGHWAY GRADE CROSSING

SHEET 4 OF 4

	NAME	DATE	REVISIONS	
DESIGNED	J.M.H.	5/85 6/88	NAME	DATE
CHECKED	FWS CTD	6/85 6/88	GEOMETRICS/K.A.G.	07/02
CADD NO.	F-5.25		K.A.G.	09/05

ALL DIMENSIONS ARE IN INCHES (MILLIMETERS) UNLESS OTHERWISE SHOWN.

CONTRACT NO. 70462

F.A.P RTE.	SECTION	COUNTY	TOTAL SHEETS	SHEET NO.
332	48B	VERMILION	27	23
STA. 9+32.00		TO STA. 11+00.00		
FED. ROAD DIST. NO.	ILLINOIS	FED. AID PROJECT		

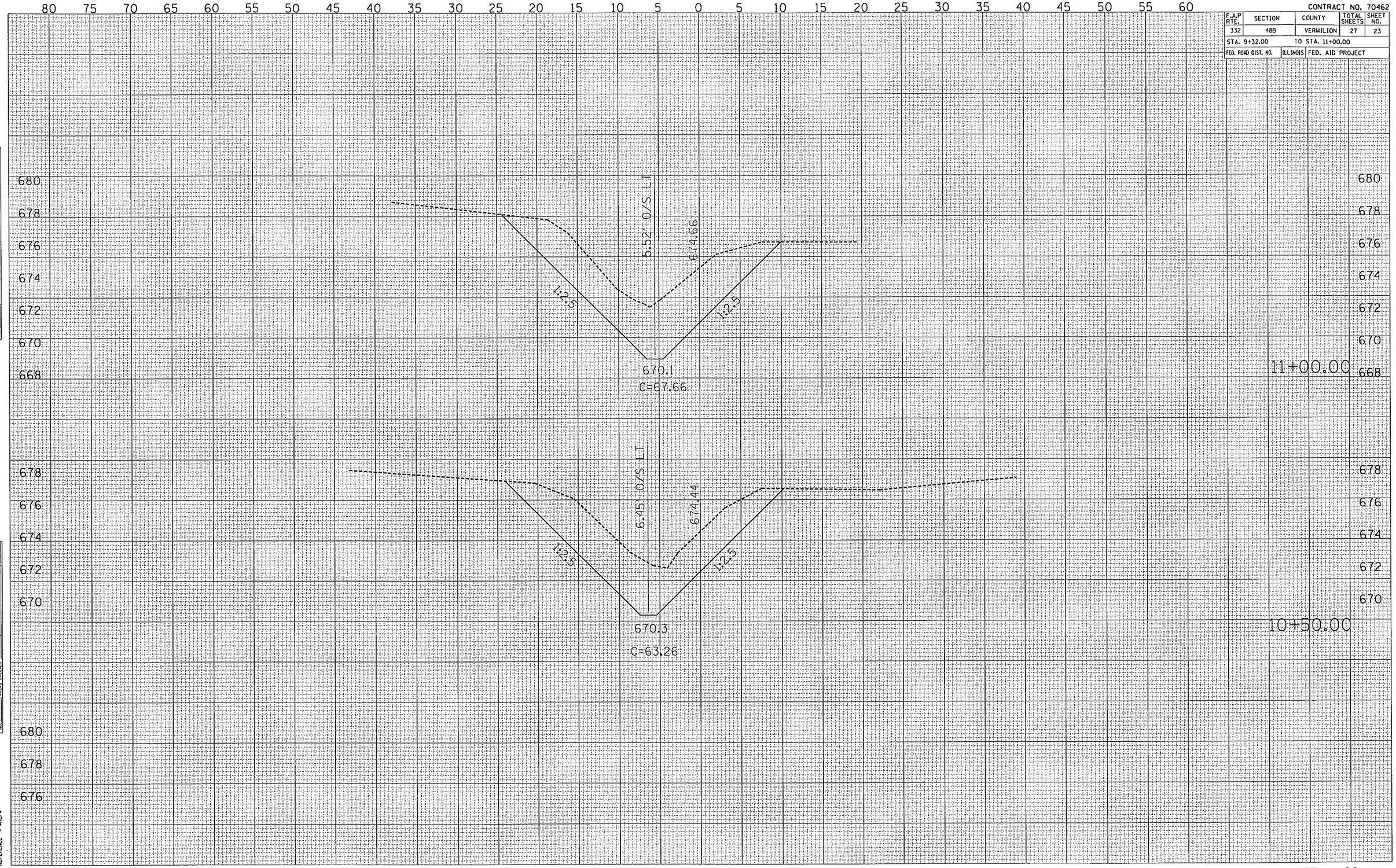

FINAL SURVEY	BY	DATE
SURVEYED		
PLOTTED		
TEMPLATE		
AREAS		
AREAS CHECKED		
NOTE BOOK NO.		

ORIGINAL SURVEY	BY	DATE
SURVEYED		
PLOTTED		
TEMPLATE		
AREAS		
AREAS CHECKED		
NOTE BOOK NO.		

PLOT DATE = 3/23/2006
FILE NAME = c:\projects\d581105 (v8)\bensa.dgn
PLOT SCALE = 10.0000 ' / IN.
REFERENCE = $$REF4

CONTRACT NO. 70462

F.A.P RTE.	SECTION	COUNTY	TOTAL SHEETS	SHEET NO.
332	4BB	VERMILION	27	24
STA. 11+50.00		TO STA. 12+50.00		
FED. ROAD DIST. NO.	ILLINOIS	FED. AID PROJECT		

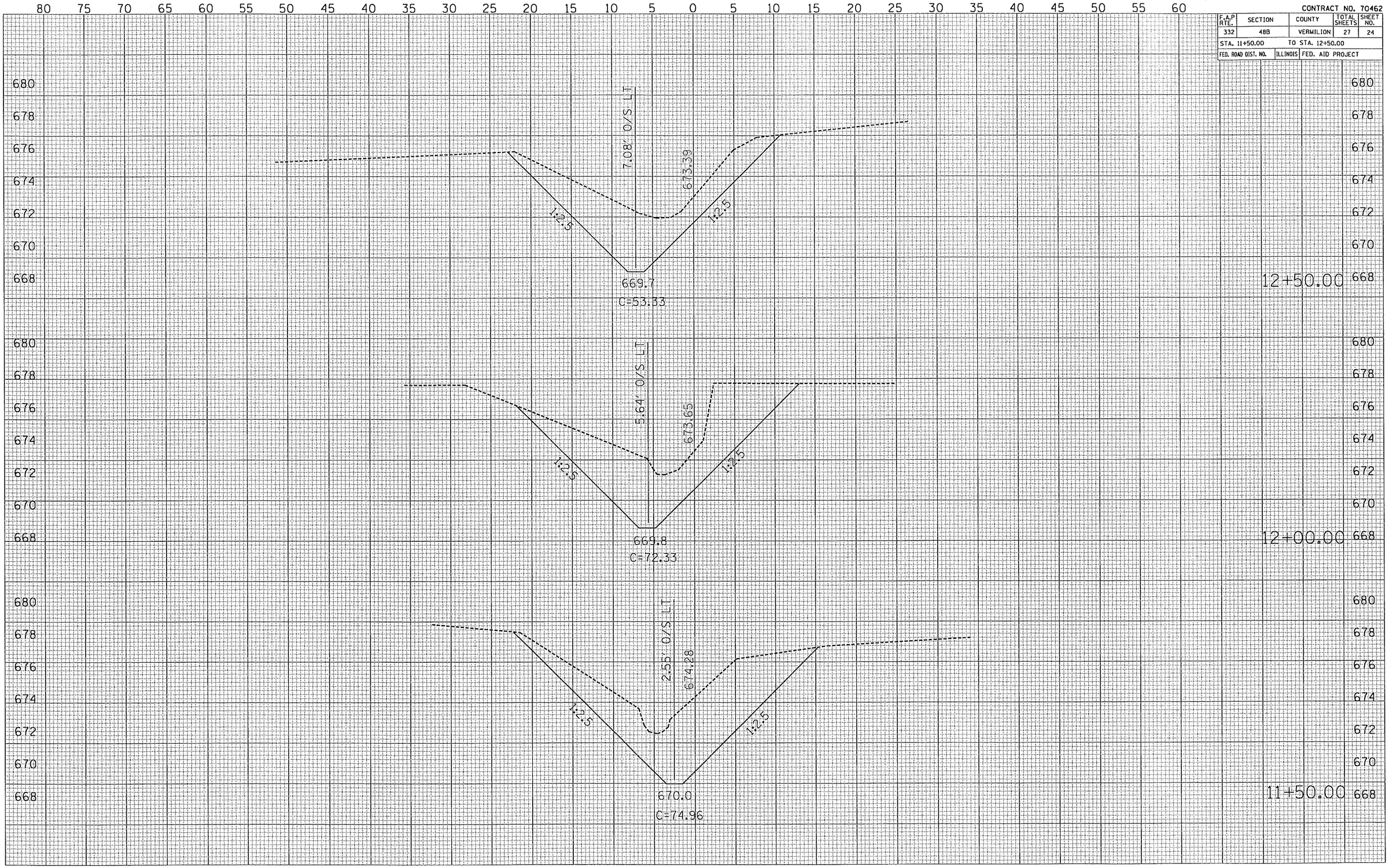

FINAL SURVEY	BY	DATE
NOTE BOOK	SURVEYED	
NO.	PLOTTED	
	TEMPLATE	
	AREAS	
	AREAS CHECKED	

ORIGINAL SURVEY	BY	DATE
NOTE BOOK	SURVEYED	
NO.	PLOTTED	
	TEMPLATE	
	AREAS	
	AREAS CHECKED	

PLOT DATE = 3/23/2006
FILE NAME = c:\projects\d501105 ix81\bsnrw.dgn
PLOT SCALE = 10.0000 ' / IN.
REFERENCE = REF

CONTRACT NO. 70462

F.A.P RTE.	SECTION	COUNTY	TOTAL SHEETS	SHEET NO.
332	48B	VERMILION	27	25

STA. 13+00.00 TO STA. 14+50.00

FED. ROAD DIST. NO. | ILLINOIS | FED. AID PROJECT

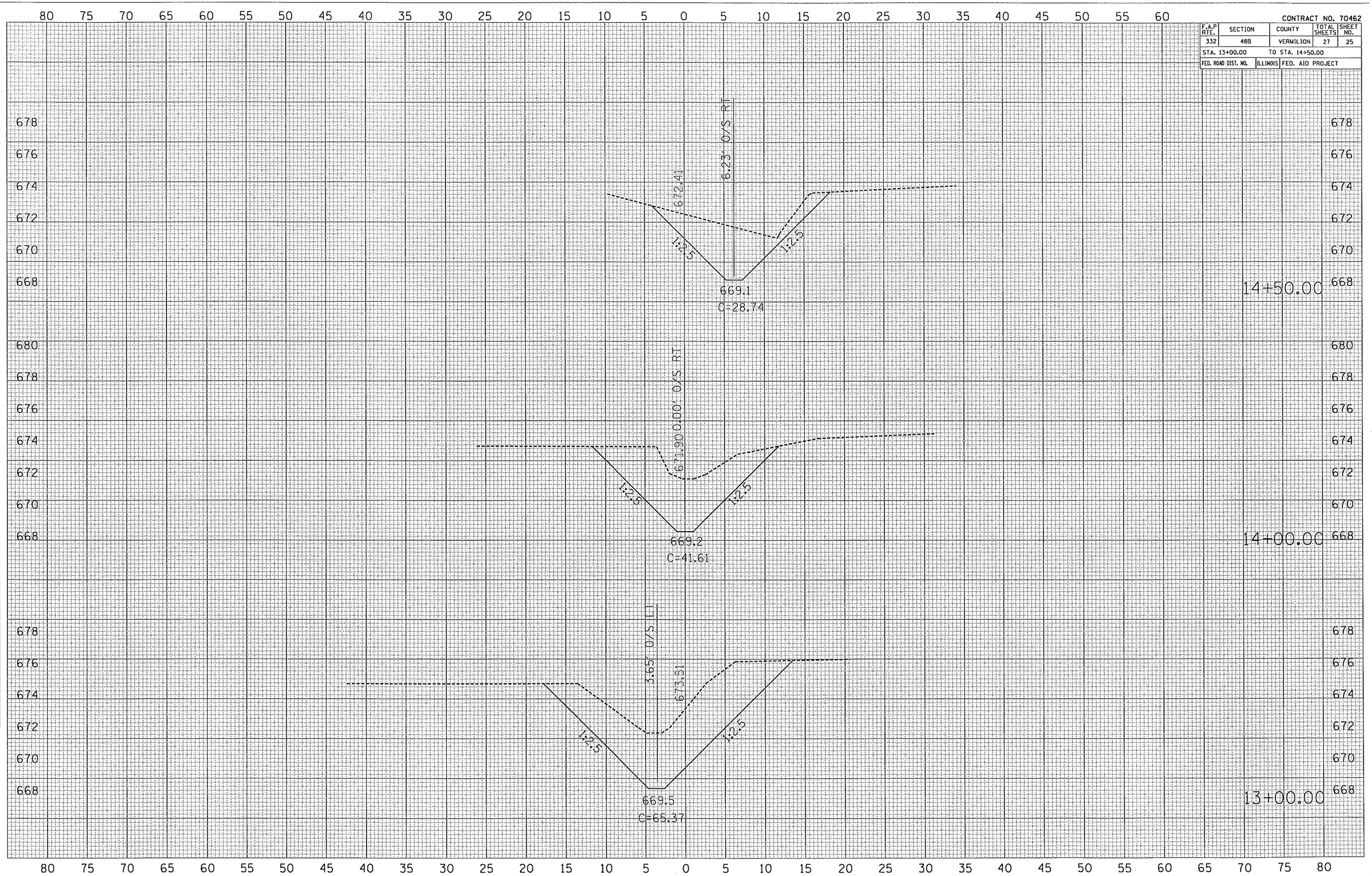

FINAL SURVEY	BY	DATE
SURVEYED		
PLOTTED		
TEMPLATE		
AREAS		
AREAS CHECKED		
NOTE BOOK NO.		

ORIGINAL SURVEY	BY	DATE
SURVEYED		
PLOTTED		
TEMPLATE		
AREAS		
AREAS CHECKED		
NOTE BOOK NO.		

PLOT DATE = 3/23/2006
FILE NAME = c:\projects\d581185 lvb1\bennu.dgn
PLOT SCALE = 10.0000 ' / IN.
REFERENCE = WMS94

CONTRACT NO. 70462

F.A.P RTE.	SECTION	COUNTY	TOTAL SHEETS	SHEET NO.
332	48B	VERMILION	27	26

STA. 15+00.00 TO STA. 16+00.00

FED. ROAD DIST. NO. | ILLINOIS | FED. AID PROJECT

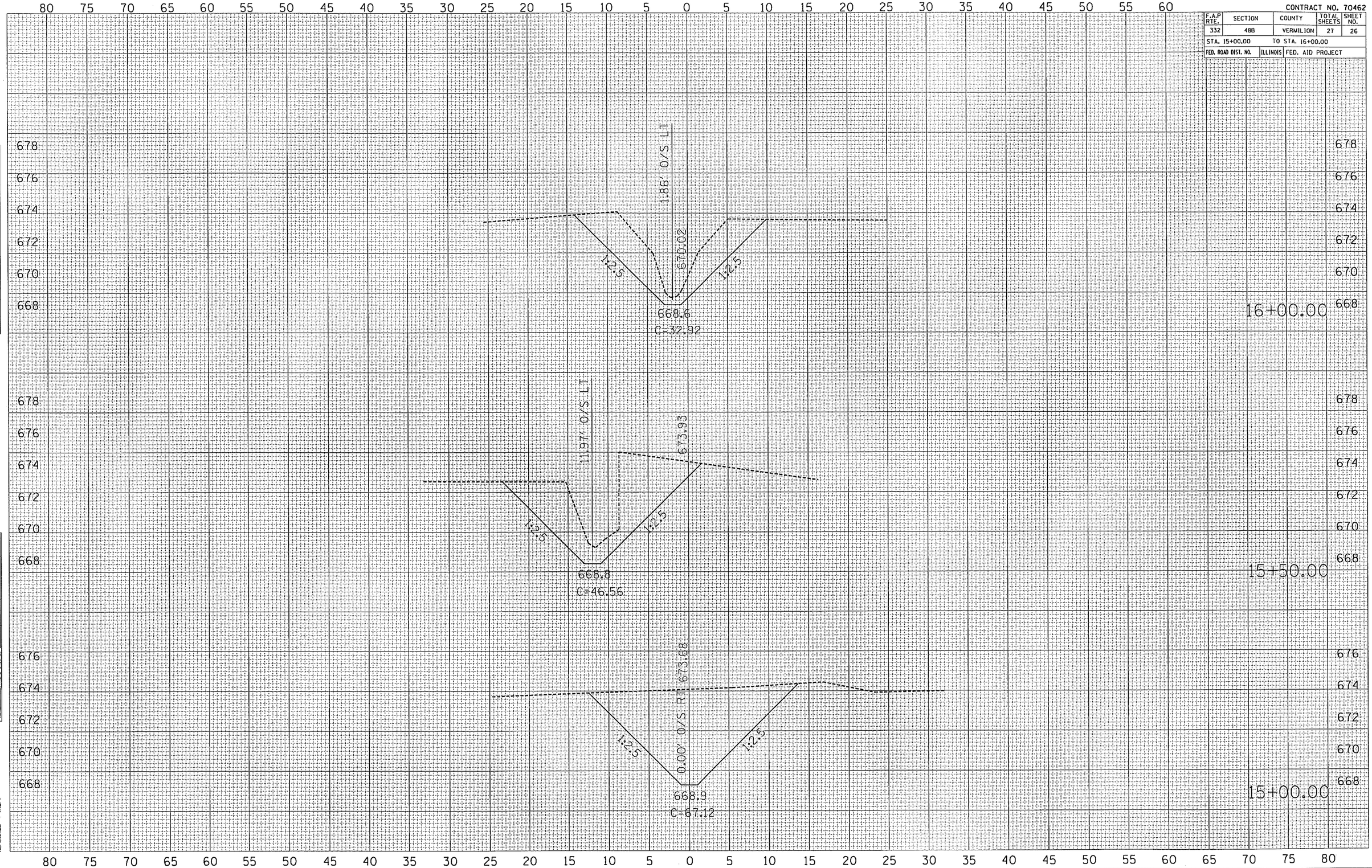

FINAL SURVEY	BY	DATE
SURVEYED		
PLOTTED		
TEMPLATE		
AREAS		
AREAS CHECKED		
NOTE BOOK NO.		

ORIGINAL SURVEY	BY	DATE
SURVEYED		
PLOTTED		
TEMPLATE		
AREAS		
AREAS CHECKED		
NOTE BOOK NO.		

PLOT DATE = 3/23/2006
FILE NAME = c:\projects\d601105 lvb\bensxsdg.dgn
PLOT SCALE = 10.0000 ' / IN.
REFERENCE = REF

CONTRACT NO. 70462

F.A.P RTE.	SECTION	COUNTY	TOTAL SHEETS	SHEET NO.
332	4BB	VERMILION	27	27

STA. 16+50.00 TO STA. 17+00.00

FED. ROAD DIST. NO. | ILLINOIS | FED. AID PROJECT

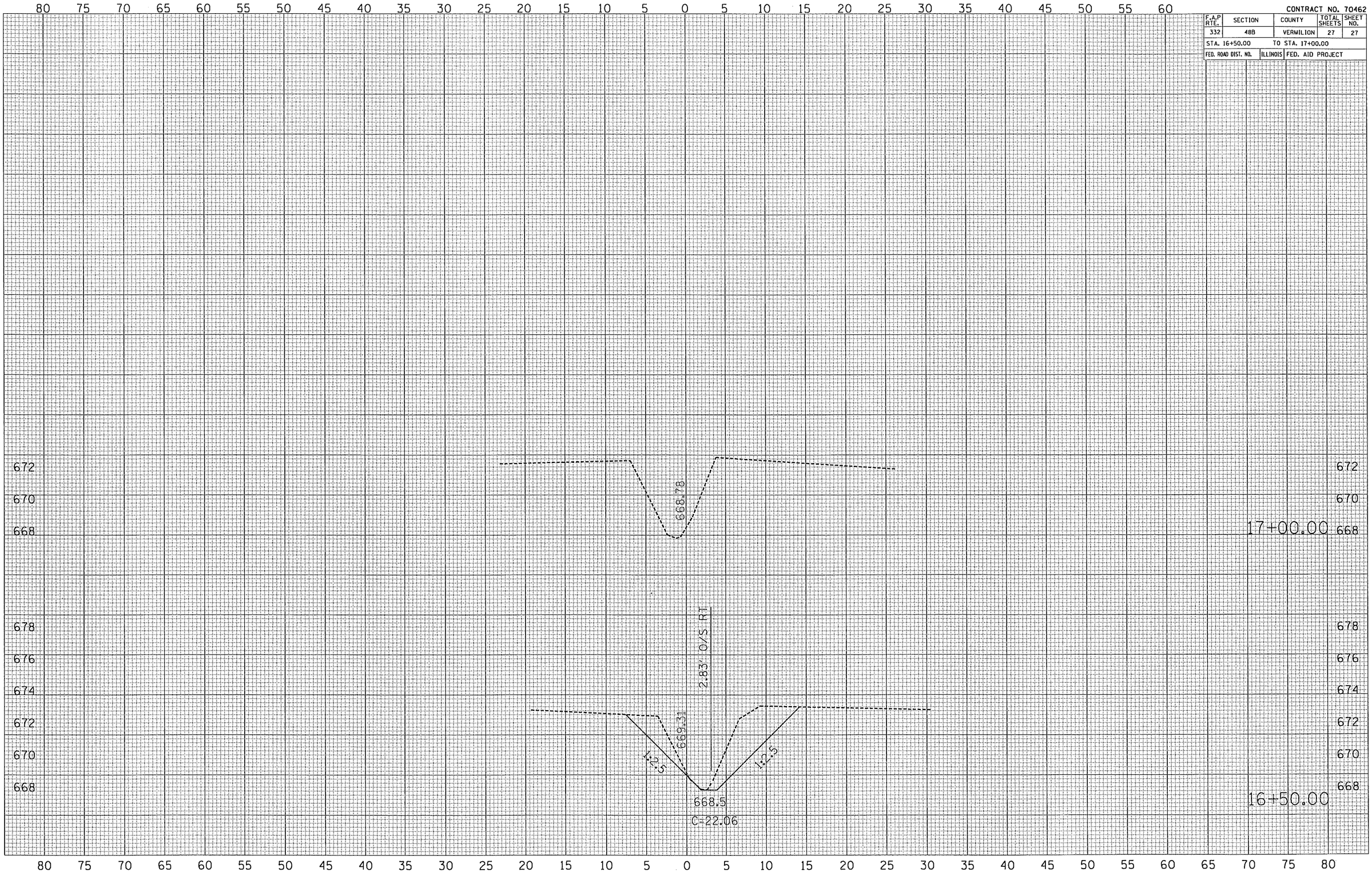

FINAL SURVEY	BY	DATE
SURVEYED		
PLOTTED		
TEMPLATE		
AREAS		
AREAS CHECKED		
NOTE BOOK NO.		

ORIGINAL SURVEY	BY	DATE
SURVEYED		
PLOTTED		
TEMPLATE		
AREAS		
AREAS CHECKED		
NOTE BOOK NO.		

PLOT DATE = 3/23/2006
FILE NAME = c:\projects\d581185 lvb\bennsdgn
PLOT SCALE = 10.0000 ' / IN.
REFERENCE = REF