F.A.P. RTE.	SECTION	COUNTY	TOTAL SHEETS	SHEET No.
315	34-5	HANCOCK	612	247
STA.		TO STA.		
FED. ROAD DIST. No.	ILLINOIS	FED. AID PROJECT		

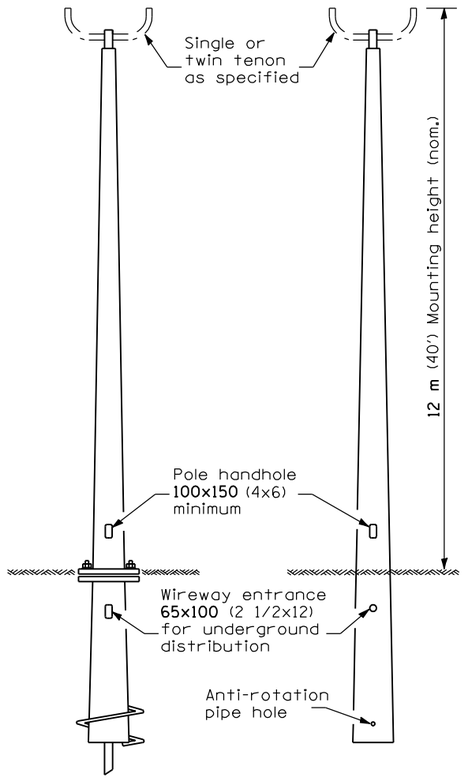

ANCHOR BASE W/ METAL FOUNDATION

BUTT BASE

POLE, FIBERGLASS BREAKAWAY TYPE

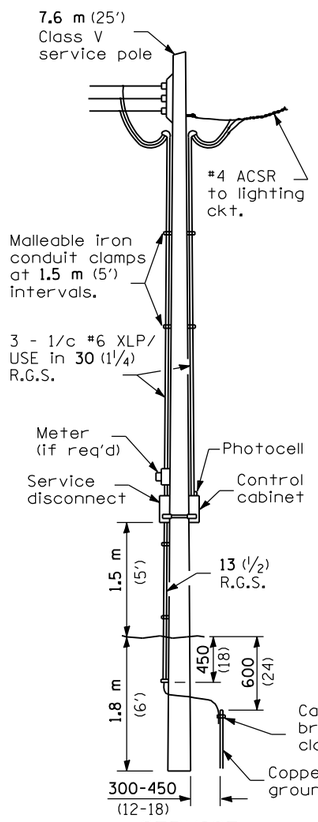

SERVICE INSTALLATION

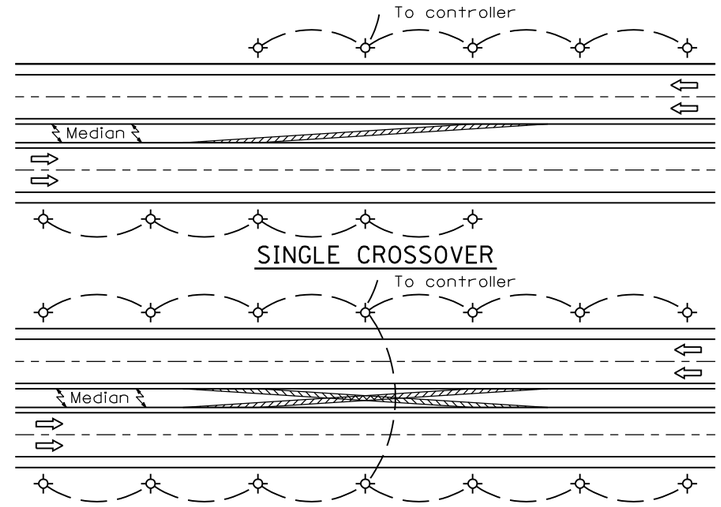

SINGLE CROSSOVER

DUAL CROSSOVER

NOTE:

Min. Pole spacing 60 m (200')
Max. Pole spacing 75 m (250')

Setback shall be min. 9 m (30') or 1.5 m (5') back of ditch, unless breakaway type pole is used.

1. Luminaire
2. Wood pole, class 3 or better
3. 63 (2 1/2) Galv. steel conduit
4. Single offset pole band
5. Conduit bushing
6. Cable clamps on 600 (24) centers
7. 2/c #12 Type USE cable
8. 25 (1) Galv. steel conduit 3.0 m (10') in length

NOTE:

Luminaire(s) shall have a 2-pole inline weatherproof quick disconnect fuse holder.

Luminaire(s) shall be oriented and the mounting angle adjusted as recommended by the Engineer.

Connect luminaire equipment ground to ACSR messenger.

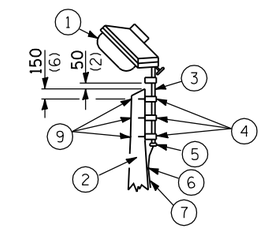

9. 16 (5/8) Ø hot dipped galvanized bolt with flat washer & locknut (3 req'd)
10. Conduit clamps on 900 (36) centers
11. Unit duct
12. Threaded reducer
13. "C" Condulet, threaded
14. 40 (1 1/2) Galv. steel conduit for 1 unit duct or 75 (3) galv. steel conduit for 2 or 3 unit ducts.

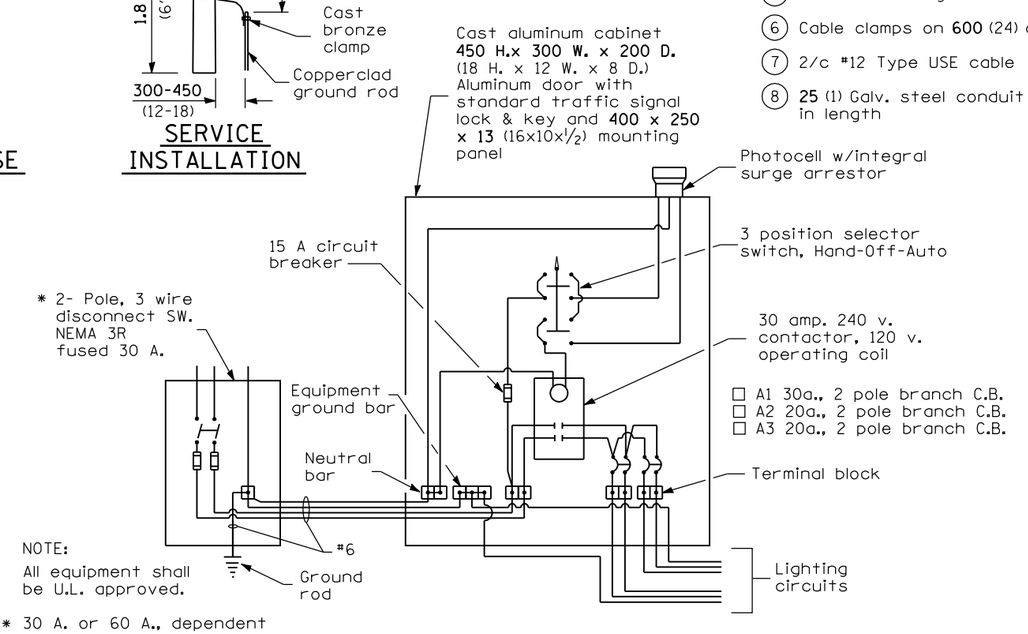

NOTE:

All equipment shall be U.L. approved.

* 30 A. or 60 A., dependent upon utility co. rules.

WIRING DIAGRAM

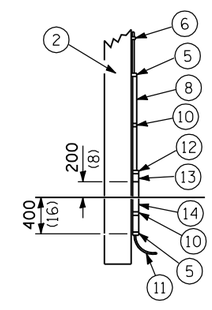

POLE, WOOD

POLE LENGTH	DEPTH IN GROUND
19.8 m (65')	3.6 m (12')
18.0 m (60')	3.0 m (10')
16.8 m (55')	2.7 m (9')
16.0 m (50')	2.4 m (8')
13.7 m (45')	2.1 m (7')
12.0 m (40')	2.0 m (6.5')
10.7 m (35')	1.8 m (6')
9.0 m (30')	1.7 m (5.5')

TEMPORARY ROADWAY LIGHTING

REVISIONS NAME	DATE

ILLINOIS DEPARTMENT OF TRANSPORTATION

FAP 315 (US 136)
LIGHTING PLANS
LIGHTING DETAILS

SCALE: DRAWN BY: RG
DATE: MARCH 10, 2006 CHECKED BY: JAC

•DGN-SPEC•
•DATE-TIME•
•REF01

D6 PROJECT: FILE: .