STATE OF ILLINOIS
DEPARTMENT OF TRANSPORTATION

INDEX OF SHEETS

Sheet No.	Description
1	Gen. Plan, Gen. Notes & Total Bill of Mat'l
2	Superstructure

F.A.I. RTE.	SECTION	COUNTY	TOTAL SHEETS	SHEET NO.
64	82-8HB	ST. CLAIR	39	38
FED. ROAD DIST. NO.	ILLINOIS	FED. AID PROJECT		

CONTRACT NO. 76037

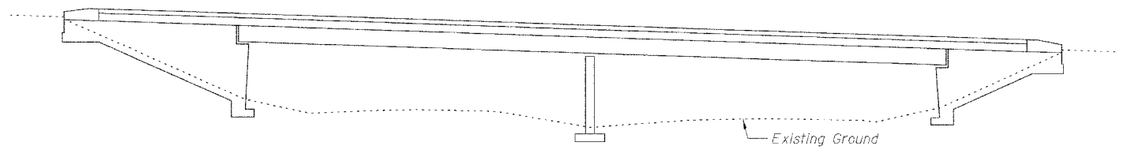

ELEVATION

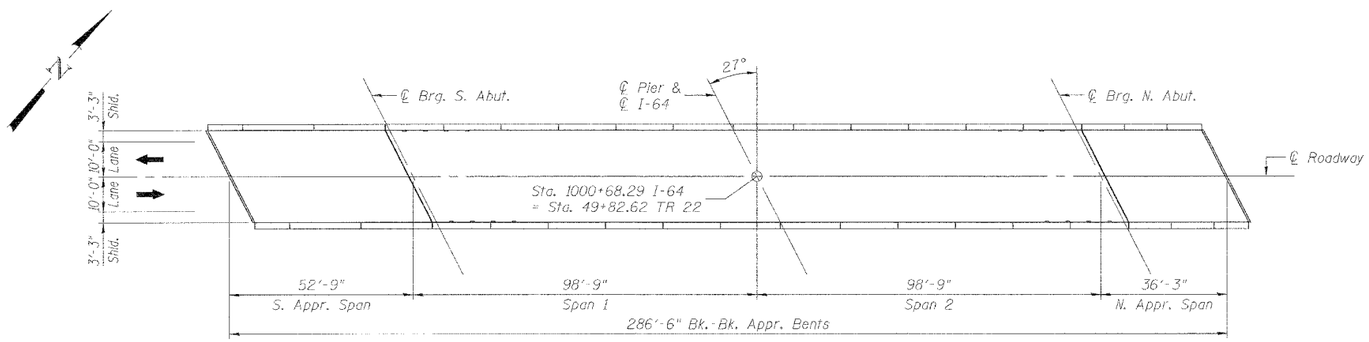

PLAN

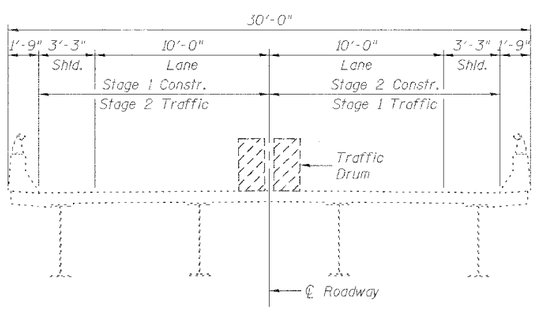

CROSS SECTION
(Looking North)

GENERAL NOTES

Plan dimensions and details relative to existing structure have been taken from existing plans and are subject to nominal construction variations. It shall be the Contractor's responsibility to verify such dimensions and details in the field and make necessary approved adjustments prior to construction or ordering of materials. Such variations shall not be cause for additional compensation for a change in the scope of the work, however, the Contractor will be paid for the quantity actually furnished at the unit price for the work.

All structural steel shall be AASHTO M 270 Grade 36, unless noted otherwise.

The Floor Drain Extensions shall be painted using the Organic Zinc-Rich/ Epoxy/ Urethane Paint System for shop and field painting. The color of the finish coat shall be Interstate Green, Munsell No. 7.5G 4/8. Cost of painting shall be included in the pay item Floor Drain Extension.

Field welding of construction accessories will not be permitted to beams or girders.

A Concrete Sealer shall be applied to the surfaces of the deck and parapets (See Special Provisions for BRIDGE DECK CONCRETE SEALER).

The existing structural steel coating contains lead. The Contractor should take appropriate precautions to deal with the presence of lead on this project.

TOTAL BILL OF MATERIAL

ITEM	UNIT	SUPER	SUB	TOTAL
Floor Drain Extension	Each	8	--	8
Plug Existing Deck Drains	Each	8	--	8
Concrete Sealer	Sq Yd	1055	--	1055
Silicone Joint Sealer, 1.5"	Foot	62	--	62

STATE OF ILLINOIS
DAVID C. DEPP
081-005117
LICENSED
STRUCTURAL ENGINEER

Signed: David Depp
Date: 3-10-2006
Lic. Expires: 11-30-2006

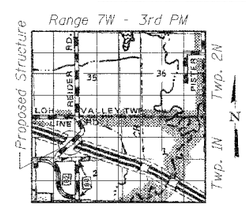

LOCATION SKETCH

GENERAL PLAN
REIDER ROAD (TR 222) OVER
INTERSTATE 64
FAI ROUTE 64 SECTION 82-8HB
ST. CLAIR COUNTY
STATION 1000+68.29
STRUCTURE NO. 082-0185

Johnson, Depp & Quisenberry
CONSULTING ENGINEERS
Springfield, Illinois

DESIGNED:	CDB	DRAWN:	P. Ray
CHECKED:	DCD	CHECKED:	CDB/DCD

DATE: 03/10/2006 - 09:40:18 USER: P. Ray FILE: F:\N0939 IL-DBV#4 I-64 Bridge Repairs \Set2\N-SN085-Reider Rd\0gplan.dgn