F.A.U. RTE.	SECTION	COUNTY	TOTAL SHEETS	SHEET NO.
0369	97-00025-00-BR	WILL	156	48
STA.		TO STA.		
FED. ROAD DIST. NO.	ILLINOIS	FED. AID PROJECT		

CONTRACT NO: 83757

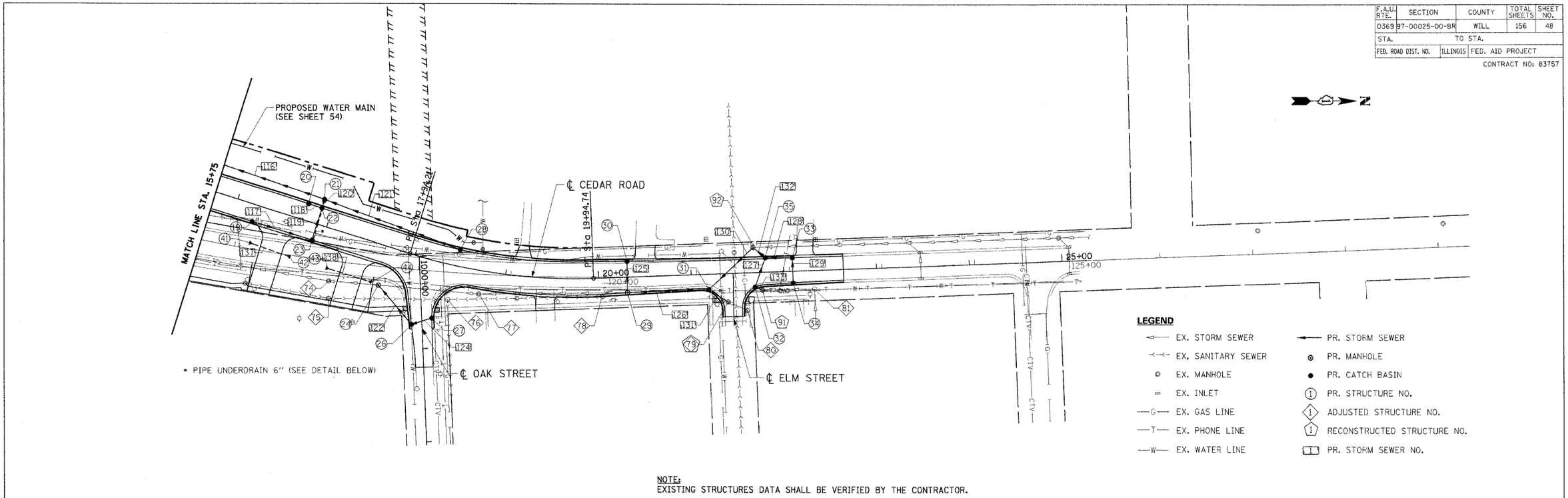

NOTE:
EXISTING STRUCTURES DATA SHALL BE VERIFIED BY THE CONTRACTOR.

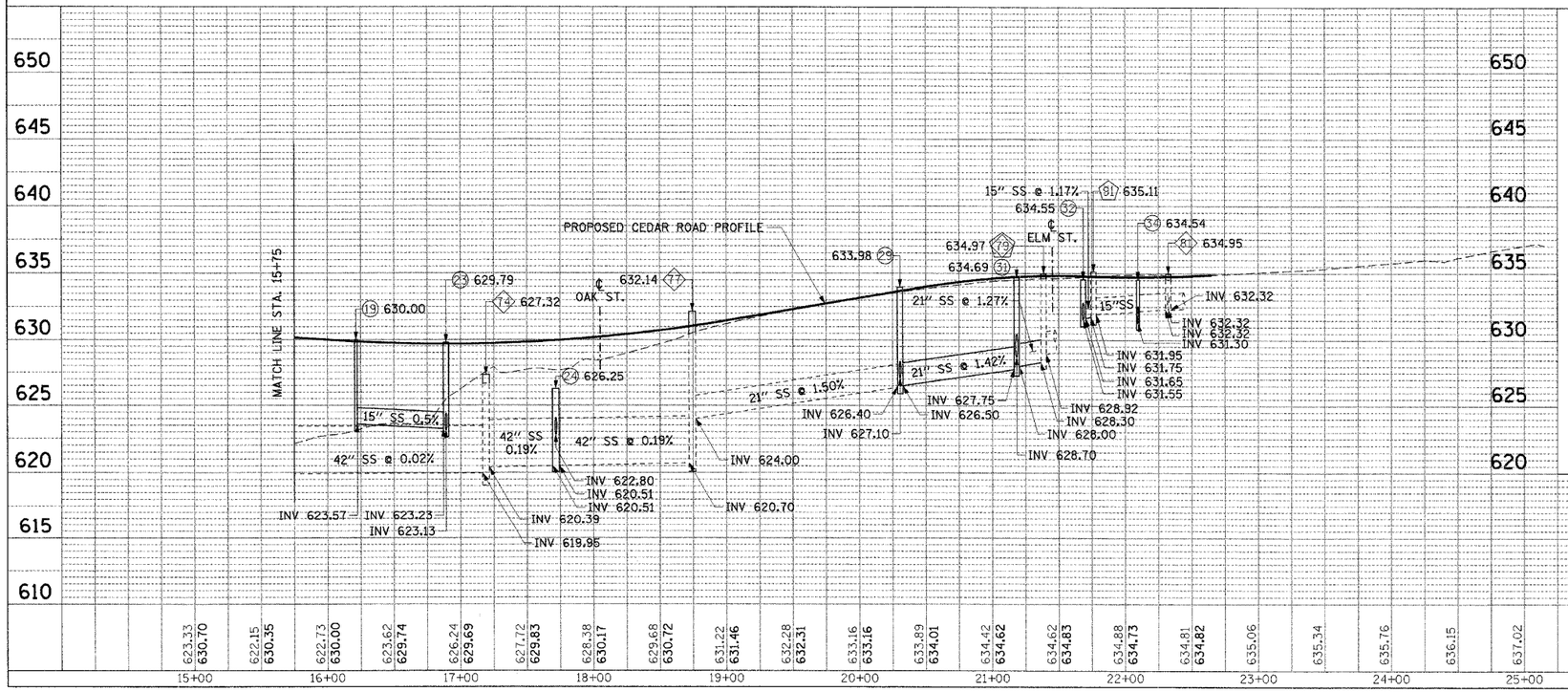

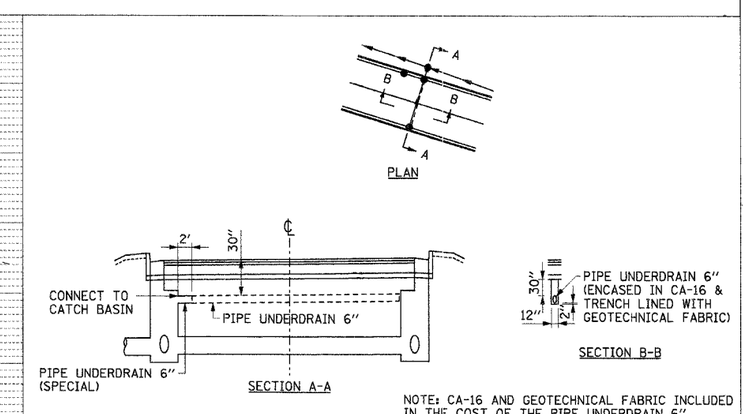

NOTE: CA-16 AND GEOTECHNICAL FABRIC INCLUDED IN THE COST OF THE PIPE UNDERDRAIN 6".

PIPE UNDERDRAIN DETAIL
STATION 16+89.16
NTS

REVISIONS	
NAME	DATE

VILLAGE OF NEW LENOX
F.A.U. (0369) CEDAR ROAD OVER HICKORY CREEK
WILL COUNTY

DRAINAGE & UTILITIES
STA. 15+75.00 TO STA. 22+64.27
EAST SIDE

SCALE: VERT. 1"=5' HORIZ. 1"=50'
DATE: 07/01/05
DRAWN BY: MAA
CHECKED BY: CJH

TENG
TENG & ASSOCIATES, INC.
ENGINEERS/ARCHITECTS/PLANNERS
205 N. MICHIGAN AVE. CHICAGO, IL 60601
TELEPHONE: 312/616-0000

PLAN: SURVEYED, PLOTTED, ALIGNMENT CHECKED, RT. OF WAY CHECKED, CADD FILE NAME, NOTE BOOK NO., BY, DATE

PROFILE: SURVEYED, PLOTTED, GRADES CHECKED, B.M. NOTED, STRUCTURE NOTATNS CHKD, NOTE BOOK NO., BY, DATE

...\TP0000NKS.DGN, ...\TTB00NKZ.DGN, ...\RDW00NKV.DGN, ...\ALTOON14.DGN, ...\RDW00NKF.DGN, ...\PRF00NKZ.DGN, ...\PRF00NKZ.DGN, ...\SUR00NK0.DGN, ...\PRF00NRL.DGN, ...\DRA00NR..DGN, ...\DRA00NL.P.DGN, ...\XSC00NLU.DGN, ...\LGD00NRY.DGN
7-19-2005, 16:20:40 S:\DOCUMENT\023280\CIVIL\DGN\DRA00NUS.DGN ROSSPF