F.A.U. RTE.	SECTION	COUNTY	TOTAL SHEETS	SHEET NO.
0369	97-00025-00-BR	WILL	156	133
STA.		TO STA.		
FED. ROAD DIST. NO.	ILLINOIS	FED. AID PROJECT		

CONTRACT NO: 83757

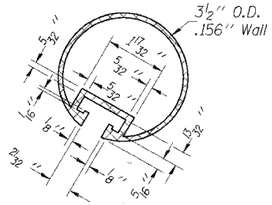

SECTION THRU TOP RAIL

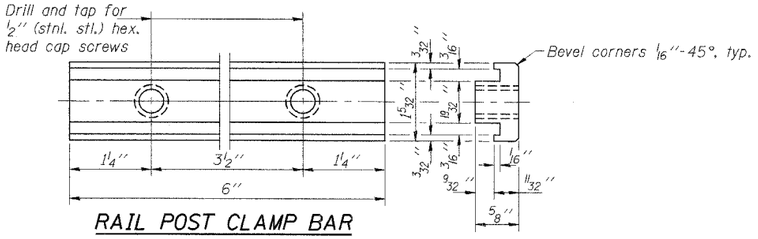

RAIL POST CLAMP BAR

For Top Rail

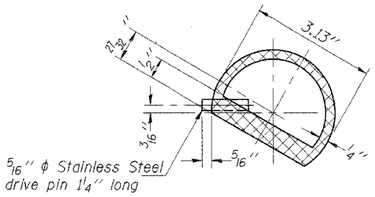

SECTION THRU SPLICE

For Top Rail

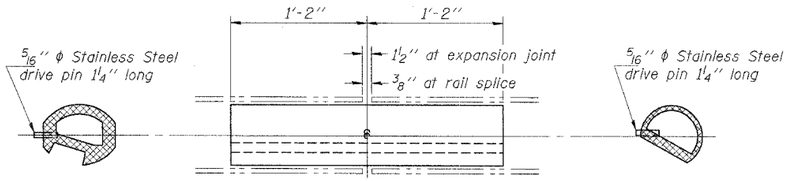

BOTTOM RAIL

RAIL SPLICE

TOP RAIL

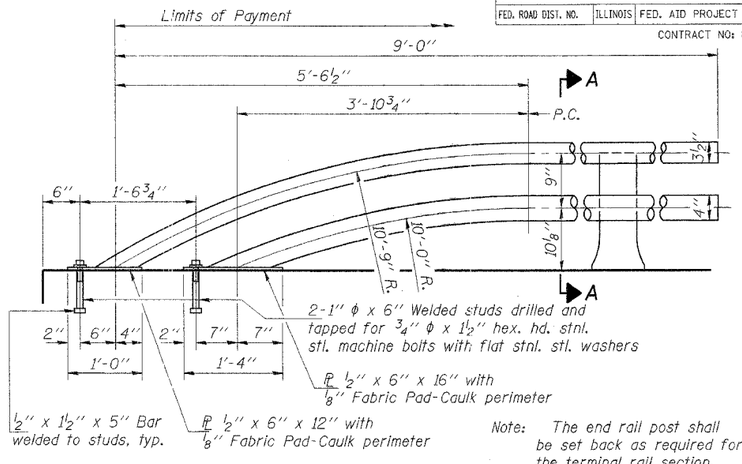

Note: The end rail post shall be set back as required for the terminal rail section.

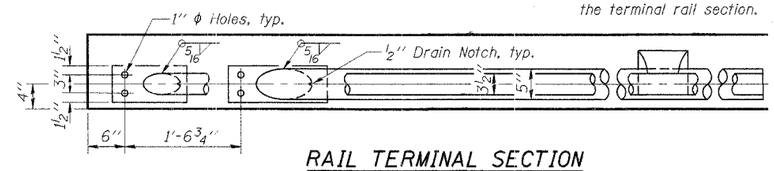

RAIL TERMINAL SECTION

BILL OF MATERIAL

Item	Unit	Quantity
Aluminum Railing, Type L	Foot	110.75

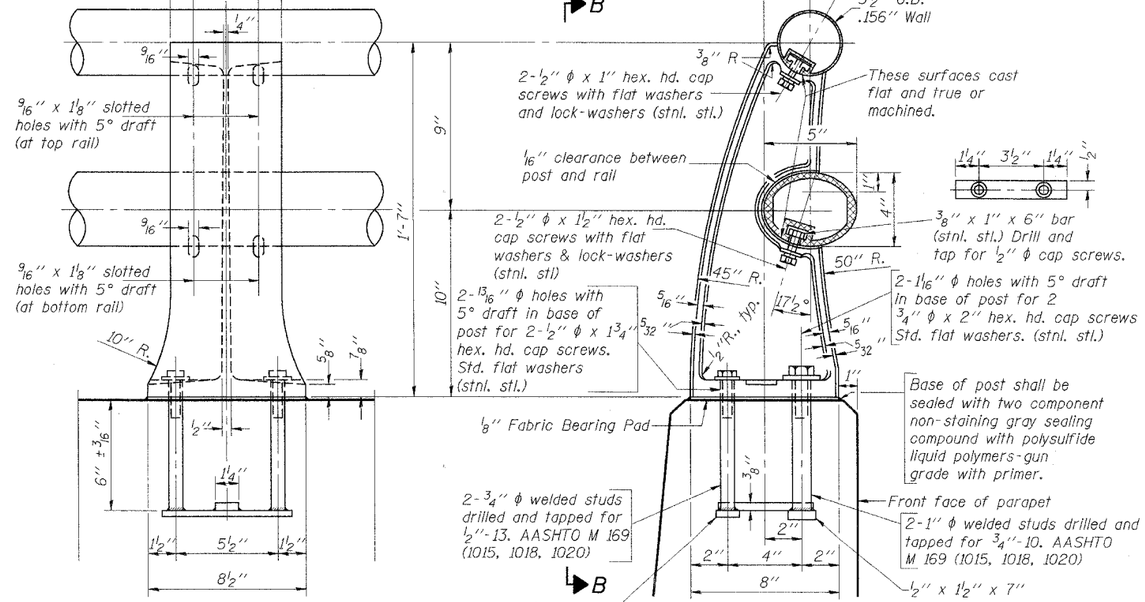

VIEW B-B

SECTION A-A

RAIL POST DETAILS

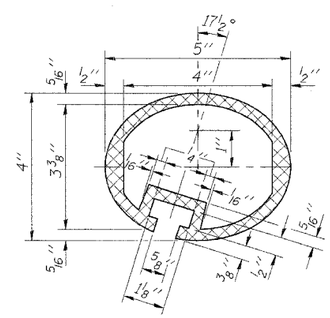

SEC. THRU ELLIPTICAL RAIL SECTION

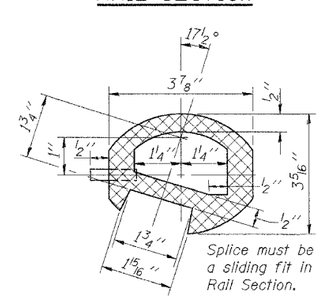

SEC. THRU SPLICE

Notes: All Posts shall be normal to parapet.

All Aluminum Alloy Extruded Rail shall be supplied in modular lengths of 30 feet, except at the end of bridge or over open joints in bridge deck where the rail shall be attached to a minimum of 2 posts. If the rail is on a horizontal curve of 2300 foot radius or less, the modular lengths may be reduced but shall be attached to a minimum of 2 posts.

All joints in rail shall be spliced per detail.

Provide 1-⅛" and 2-1/16" Aluminum Shims for 25% of the Posts. Rail elements shall be parallel to Grade-high spots will be ground and low spots shimmed.

Railing shall be according to Section 509 of the Standard Specifications, except as noted, and will be paid for at the contract unit price per foot for ALUMINUM RAILING, TYPE L.

Aluminum alloy rail shall conform to ASTM B 221 alloy 6061-T6 or 6351-T5 with min. yield 35 ksi, min. tensile 38 ksi, and elongation of 10% in 2 inches.

SHT. S-24

REVISIONS	
NAME	DATE

VILLAGE OF NEW LENOX
F.A.U. (0369) CEDAR ROAD OVER HICKORY CREEK
WILL COUNTY

ALUMINUM RAILING DETAILS

SCALE: NO SCALE — DRAWN BY: FZD

DATE: 07/01/05 — CHECKED BY: KPS

TENG

TENG & ASSOCIATES, INC.
ENGINEERS•ARCHITECTS•PLANNERS
205 N. MICHIGAN AVE. CHICAGO, IL 60601
TELEPHONE: 312616-0300

..\DNPOINT9.DGN,..\SCROONTLDGN,..\DNPOINT9.DGN,..\TTB00NZ.DGN,..\FASCRATCH.DGN,..\DAOORALO.DGN,..\PAROONALO.DGN
S:\DOCUMENT\023980\STRUCT\GEN\DETOONVLO.DGN
7-19-2005, 16:07:36
ROSSPF