F.A.U. RTE.	SECTION	COUNTY	TOTAL SHEETS	SHEET NO.
3580	04-00043-00-TL	WILL	54	21
STA.		TO STA.		
FED. ROAD DIST. NO.	ILLINOIS	FED. AID PROJECT		

CONTRACT NO.: 83855

CONTROLLER SEQUENCE

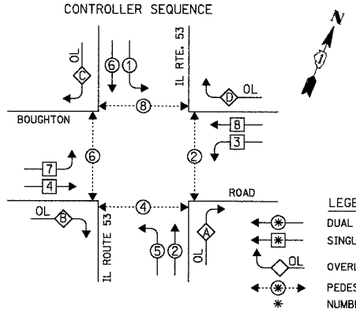

PHASE DESIGNATION DIAGRAM

RIGHT TURN OVERLAP PHASE DESIGNATION

OVERLAP LETTER		PERMISSIVE PHASE		PROTECTED PHASE		DISPLAY
A	=	2	+	3	-	2
B	=	4			-	4
C	=	6	+	7	-	6
D	=	8			-	8

EMERGENCY VEHICLE PREEMPTION SEQUENCE

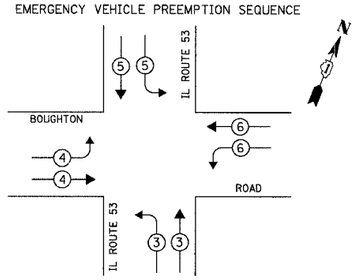

PROPOSED EMERGENCY VEHICLE PREEMPTORS				
EMERGENCY VEHICLE PREEMPTOR	3	4	5	6
MOVEMENT				

SCHEDULE OF QUANTITIES		
ITEM	UNIT	TOTAL
SIGN PANEL - TYPE 1	SQ FT	20
MAINTENANCE OF EXISTING TRAFFIC SIGNAL INSTALLATION	EACH	1
CONTROLLER CABINET TYPE V	EACH	1
TRANSCEIVER - FIBER OPTIC	EACH	1
INDUCTIVE LOOP DETECTOR	EACH	16
RELOCATE EXISTING TRAFFIC SIGNAL CONTROLLER	EACH	1
REMOVE EXISTING TRAFFIC SIGNAL EQUIPMENT	EACH	1
LED SIGNAL FACE RETROFIT, RED ARROW	EACH	4
RELOCATE EXISTING EMERGENCY VEHICLE PRIORITY GPS SYSTEM	EACH	1
RELOCATE EXISTING UPS BATTERY BACK-UP SYSTEM	EACH	1

THE FOLLOWING EXISTING TRAFFIC SIGNAL EQUIPMENT SHALL BE REMOVED BY THE CONTRACTOR, SHALL REMAIN THE PROPERTY OF THE OF THE VILLAGE OF BOLINGBROOK, AND SHALL BE DELIVERED BY THE CONTRACTOR TO THE VILLAGE YARD AS PER THE TRAFFIC SIGNAL SPECIFICATIONS.

1 EACH CABINET

THE FOLLOWING ITEMS SHALL BE REMOVED BY THE CONTRACTOR AND SHALL BE DISPOSED OF BY THEM OUTSIDE THE RIGHT-OF-WAY AT THEIR EXPENSE. THE SALVAGE VALUE OF THE REMOVED EQUIPMENT SHALL BE REFLECTED IN THE CONTRACT BID PRICE.

4 EACH SIGN PANEL TYPE I
4 EACH LED SIGNAL FACE, RED BALL

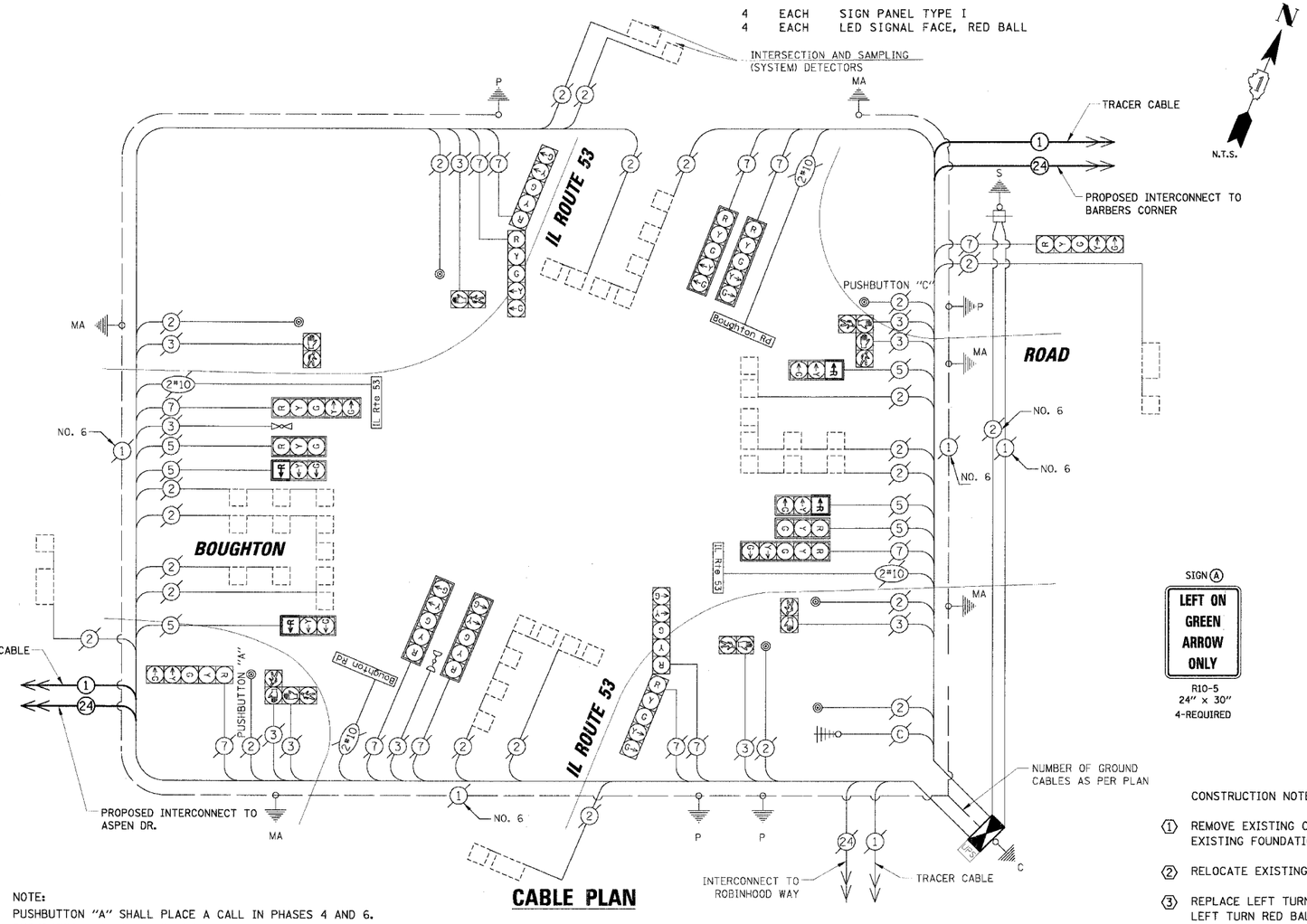

CABLE PLAN

CABLE PLAN LEGEND

EXISTING	PROPOSED	
G	G	8" (200mm) TRAFFIC SIGNAL SECTION
R	R	12" (300mm) TRAFFIC SIGNAL SECTION
W	W	12" (300mm) PEDESTRIAN SIGNAL SECTION
		12" (300mm) PEDESTRIAN SIGNAL SECTION
		CONTROLLER CABINET
		SERVICE INSTALLATION
	T	TELEPHONE INSTALLATION
		VEHICLE DETECTOR, INDUCTION LOOP
		MAGNETIC DETECTOR
		EMERGENCY VEHICLE LIGHT DETECTOR
		CONFIRMATION BEACON
		PUSHBUTTON DETECTOR
2	2	DENOTES NUMBER OF CONDUCTORS. ALL CABLE NO. 14 EXCEPT AS INDICATED. ALL LOOP DETECTOR CABLE TO BE SHIELDED.
1	1	GROUND CABLE IN CONDUIT NO. 6 SOLID COPPER (GREEN)
24	24	FIBER OPTIC CABLE IN CONDUIT NO. 62.5/125 2-MM12F SM12F
R Y G Y G	R Y G Y G	SIGNAL FACE WITH BACKPLATE. "P" INDICATES PROGRAMMED HEAD.
"P"	"P"	
"E"		RAILROAD CONTROL CABINET
"E"		ILLUMINATED SIGN "NO LEFT TURN"
"E"		ILLUMINATED SIGN "NO RIGHT TURN"
H/C C		GROUND ROD AT HANDHOLE (H), DOUBLE HANDHOLE (H), OR CONTROLLER (C)
P P		GROUND ROD AT POST (P) OR MAST ARM POLE (MA)
S S		GROUND ROD AT ELECTRIC SERVICE INSTALLATION
		ILLUMINATED STREET NAME SIGN
		EMERGENCY VEHICLE SYSTEM ANTENNA
		LUMINAIRE
C		COAXIAL CABLE
UPS	UPS	UNINTERRUPTABLE POWER SUPPLY

SIGN (A)

LEFT ON GREEN ARROW ONLY

R10-5
24" x 30"
4-REQUIRED

CONSTRUCTION NOTES:

1. REMOVE EXISTING CABINET. INSTALL NEW TYPE V CABINET ON EXISTING FOUNDATION, AND FIBER OPTIC TRANSCEIVER.
2. RELOCATE EXISTING CONTROLLER, EVP AND UPS UNITS.
3. REPLACE LEFT TURN SIGNS WITH "LEFT ON GREEN ARROW ONLY" AND LEFT TURN RED BALLS WITH RED ARROWS. (4 REQUIRED)

I.D.O.T. TRAFFIC SIGNAL INSTALLATION ELECTRICAL SERVICE REQUIREMENTS					TOTAL WATTAGE
TYPE	NO. OF LAMPS	WATTAGE INCAND.	WATTAGE LED	x % OPERATION	
SIGNAL (RED)	18		17	0.50	153.00
(YELLOW)	18		25	0.25	112.50
(GREEN)	18		15	0.25	67.50
ARROW	24		12	0.10	28.80
PED. SIGNAL	8		25	1.00	200.00
CONTROLLER	1		100	1.00	100.00
ILLUM. SIGN	-		25	0.05	-
ILLUM. ST. NAME SIGN	4		60	0.50	120.00
FLASHER				0.50	
ENERGY COSTS TO:				TOTAL =	781.80

VILLAGE OF BOLINGBROOK
375 BRIARCLIFF ROAD
BOLINGBROOK, ILLINOIS 60440-0951

ENERGY SUPPLY: CONTACT: DALE BOLLINGER
PHONE: (815) 724-5717
COMPANY: COMED

NOTE:
PUSHBUTTON "A" SHALL PLACE A CALL IN PHASES 4 AND 6.
PUSHBUTTON "C" SHALL PLACE A CALL IN PHASES 2 AND 8.

FOUNDATION (DEPTH)	FT.	(m)
TYPE A - POST	4	(1.2)
D - CONTROLLER	4	(1.2)
E - M. ARM POLE		
24" (600mm)	10	(3.0)
30" (750mm)	15	(4.6)
36" (900mm)	15	(4.6)

CABLE SLACK	FT.	(m)
HANDHOLE	6.5	(2.0)
DOUBLE HANDHOLE	13	(4.0)
SIGNAL POST	2	(1.0)
CONTROLLER CAB.	1	(0.5)
FIBER OPTIC	13	(4.0)
ELECTRIC SERVICE	1	(0.5)
GROUND CABLE	1	(0.5)

VERTICAL	FT.	(m)
ALL FOUNDATIONS	3.5	(1.0)
MAST ARM (L) POLE	20'+L-2= (6m+L-0.6m)=	
BRACKET MOUNTED	13	(4.0)
PED. PUSHBUTTON	4	(1.2)
ELECTRIC SERVICE	13.5	(4.1)
SERVICE TO GROUND	13.5	(4.1)
POST MOUNTED	6	(1.8)

NOTE:
THE TRAFFIC SIGNAL CONTROLLER EQUIPMENT FOR THIS PROJECT SHALL BE "ECONOLITE" TO MATCH THE EXISTING ADJACENT SYSTEM.

REVISIONS	
NAME	DATE

ILLINOIS DEPARTMENT OF TRANSPORTATION

SCHEDULE OF QUANTITIES, CABLE PLAN AND PHASE DESIGNATION DIAGRAM

BOUGHTON ROAD AND IL. ROUTE 53
BOLINGBROOK, ILLINOIS

SCALE: N.T.S.
DATE: 4/7/2006
DRAWN BY: FCP/FPB
DESIGNED BY: MKW
CHECKED BY: MJT

CHRISTOPHER B. BURKE ENGINEERING LTD.
9575 West Higgins Road, Suite 600
Rosemont, Illinois 60018
(847) 823-0500

N:\BOLINGBROOK\05559\Traffic\CAB_IL53.dgn