CODE NO.	ITEM	UNIT	TOTAL QUANTITY	100 % STATE ROADWAY 0005 ✓ URBAN ✓
40600290	BITUMINOUS MATERIALS (TACK COAT)	POUND	72763	72763
67000400	ENGINEER'S FIELD OFFICE, TYPE A	CAL MO	7	7
67100100	MOBILIZATION	LSUM	1	1
70100420	TRAFFIC CONTROL AND PROTECTION, STANDARD 701411	EACH	20	20
70100700	TRAFFIC CONTROL AND PROTECTION, STANDARD 701406	LSUM	1	1
70100800	TRAFFIC CONTROL AND PROTECTION, STANDARD 701401	LSUM	1	1
70100815	TRAFFIC CONTROL AND PROTECTION, STANDARD 701446	LSUM	1	1
70200100	NIGHTTIME WORK ZONE LIGHTING	LSUM	1	1
70300100	SHORT TERM PAVEMENT MARKING	FOOT	37912	37912
70300150	SHORT TERM PAVEMENT MARKING REMOVAL	SQ FT	12637	12637
70300220	TEMPORARY PAVEMENT MARKING - LINE 4"	FOOT	229748	229748
70300240	TEMPORARY PAVEMENT MARKING - LINE 6"	FOOT	39616	39616
70300250	TEMPORARY PAVEMENT MARKING - LINE 8"	FOOT	12311	12311
* 78009004	MODIFIED URETHANE PAVEMENT MARKING - LINE 4"	FOOT	229748	229748
* 78009006	MODIFIED URETHANE PAVEMENT MARKING - LINE 6"	FOOT	39616	39616

* SPECIALTY ITEM

△ REV 6-6-17

FILE NAME = pw:\\IL884EBIDINTEG.illinois.gov:PWIDOT\Documents\IDOT Offices\District 8\Projects\D876K23-SHT-S00.dgn	USER NAME = challandeska	DESIGNED -	REVISED -
			REVISED -
	PLOT SCALE = 100.0000 ' / in.	CHECKED -	REVISED -
DgFault	PLOT DATE = 3/30/2017	DATE -	REVISED -

STATE OF ILLINOIS
DEPARTMENT OF TRANSPORTATION

SUMMARY OF QUANTITIES

SCALE: N/A | SHEET 1 OF 2 SHEETS | STA. TO STA.

F.A.I. RTE.	SECTION	COUNTY	TOTAL SHEETS	SHEET NO.
270	60-(4,5)-1RS-5	MADISON	18	3

CONTRACT NO. 76K23

ILLINOIS FED. AID PROJECT

	CODE NO.	ITEM	UNIT	TOTAL QUANTITY	100 % STATE ROADWAY 0005 URBAN
*	78009008	MODIFIED URETHANE PAVEMENT MARKING - LINE 8"	FOOT	12311	12311
*	78100100	RAISED REFLECTIVE PAVEMENT MARKER	EACH	40	40
	X0326808	INTERSTATE WEEKEND CLOSURE, SPECIAL	LSUM	1	1
	X0327979	PAVEMENT MARKING REMOVAL - GRINDING	SQ FT	97134	97134
	X1600001	FIBER-MODIFIED ASPHALT CRACK SEALING	FOOT	203000	203000
	X3000001	RRPM PROTECTION	EACH	4408	4408
	X4405030	LONGITUDINAL PARTIAL DEPTH REMOVAL 3"	FOOT	1441	1441
	X4406030	PARTIAL DEPTH REMOVAL, TYPE I, 3"	SQ YD	31	31
	X4406230	PARTIAL DEPTH REMOVAL, TYPE II, 3"	SQ YD	373	373
	X4406630	PARTIAL DEPTH REMOVAL, TYPE IV, 3"	SQ YD	88	88
	X4420900	LONGITUDINAL PARTIAL DEPTH PATCHING	TON	38	38
	X4421000	PARTIAL DEPTH PATCHING	TON	59	59
	X7015005	CHANGEABLE MESSAGE SIGN	CAL DA	500	500
	X7030005	TEMPORARY PAVEMENT MARKING REMOVAL	SQ FT	97134	97134

1 1 1

14

* SPECIALTY ITEM

	CODE NO.	ITEM	UNIT	TOTAL QUANTITY	100 % STATE ROADWAY 0005 URBAN
	Z0016702	DETOUR SIGNING	LSUM	1	1
	X1600003	MICRO-SURFACING, 2 PASSES, MIXTURE "E"	SQ YD	393757	393757
Ø	Z0076604	TRAINEES TRAINING PROGRAM GRADUATE	HOUR	2000	2000

1

22

Ø 0042

FILE NAME = pw:\\IL084EBIDINTEG.illinois.gov:PWIDOT\Documents\IDOT Offices\District 8\Projects\D876K23\Sheets\D876K23-sht-500.dgn	USER NAME = chellardeske	DESIGNED -	REVISED -
			REVISED -
	PLOT SCALE = 100.0000 ' / in.	CHECKED -	REVISED -
Default	PLOT DATE = 3/30/2017	DATE -	REVISED -

STATE OF ILLINOIS
DEPARTMENT OF TRANSPORTATION

SUMMARY OF QUANTITIES

SCALE: N/A | SHEET 2 OF 2 SHEETS | STA. TO STA.

F.A.I. RTE.	SECTION	COUNTY	TOTAL SHEETS	SHEET NO.
270	60-(4,5)-1RS-5	MADISON	18	4
		CONTRACT NO. 76K23		
		ILLINOIS FED. AID PROJECT		

1 REV 6-6-17

REV

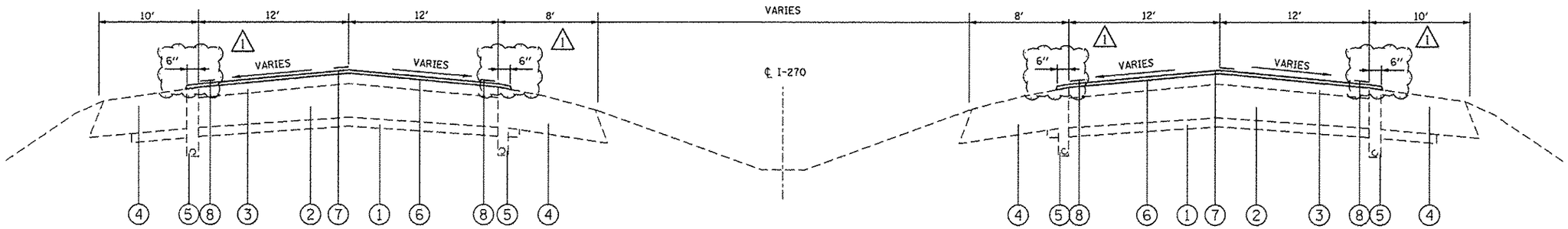

WESTBOUND
STA. 258+54 TO STA. 317+80
STA. 324+65 TO STA. 333+87
STA. 337+63 TO STA. 399+97
STA. 590+00 TO STA. 644+09
STA. 648760 TO STA. 686+16
STA. 690+00 TO STA. 793+70
STA. 795+82 TO STA. 839+47
STA. 848+05 TO STA. 852+43
STA. 861+00 TO STA. 885+66

EASTBOUND
STA. 258+56 TO STA. 317+66
STA. 324+52 TO STA. 334+05
STA. 337+78 TO STA. 399+76
STA. 607+50 TO STA. 644+37
STA. 648+81 TO STA. 685+89
STA. 689+72 TO STA. 794+05
STA. 798+40 TO STA. 857+42
STA. 860+67 TO STA. 871+97
STA. 875+58 TO STA. 880+04

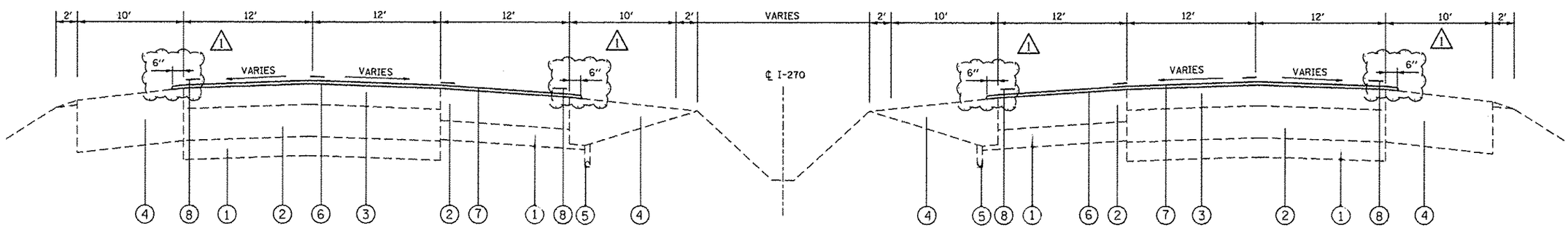

WESTBOUND
STA. 412+30 TO STA. 415+60
STA. 438+89 TO STA. 522+89
STA. 559+16 TO STA. 587+00
STA. 856+00 TO STA. 858+75

EASTBOUND
STA. 433+16 TO STA. 492+66
STA. 510+96 TO STA. 533+84
STA. 553+95 TO STA. 607+50

LEGEND

1. EXISTING SUB-BASE GRANULAR MATERIAL
2. EXISTING PCC PAVEMENT, 10"
3. EXISTING HOT-MIX ASPHALT OVERLAY
4. EXISTING HOT-MIX ASPHALT SHOULDER
5. EXISTING UNDERDRAIN
6. PROPOSED BITUMINOUS MATERIALS (TACK COAT)
7. PROPOSED MICRO-SURFACING, 2-PASSES, MIX "E"
8. PROPOSED MODIFIED URETHANE PAVEMENT MARKING

1 REVISED 6-6-17

FILE NAME = pw:\\IL004EBIDINTEG.illinois.gov:PWIDOT\Documents\IDOT Offices\District 8\Projects\D876K23\DRAWINGS\GADsheets\D876K23-sht-typical.dgn	USER NAME = ohallendaske	DESIGNED -	REVISED -	STATE OF ILLINOIS DEPARTMENT OF TRANSPORTATION	TYPICAL SECTIONS	F.A.I. RTE.	SECTION	COUNTY	TOTAL SHEETS	SHEET NO.
		DRAWN	REVISED -			270	60-(4,5)-1R5-5	MADISON	18	5
	PLOT SCALE = 100.0000 ' / in.	CHECKED -	REVISED -					CONTRACT NO. 76K23		
Default	PLOT DATE = 6/5/2017	DATE -	REVISED -		SCALE: N/A SHEET OF SHEETS STA. TO STA.		ILLINOIS FED. AID PROJECT			

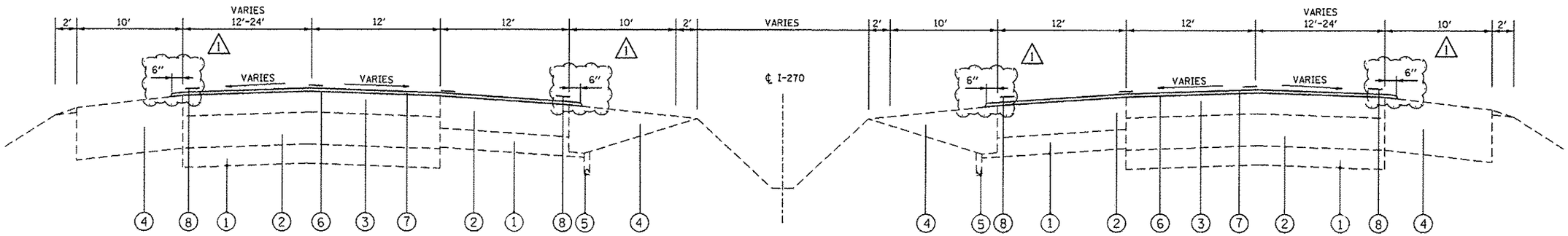

WESTBOUND
STA. 522+89 TO STA. 528+75

EASTBOUND
STA. 402+92 TO STA. 406+00
STA. 492+66 TO STA. 500+96

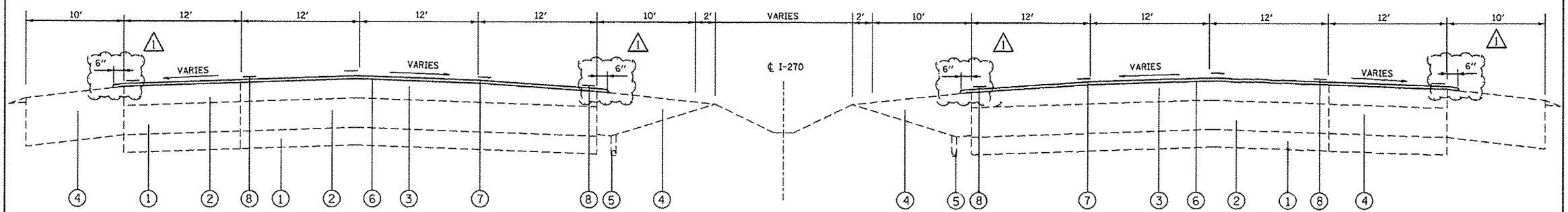

WESTBOUND
STA. 415+60 TO STA. 424+10
STA. 528+75 TO STA. 544+75

EASTBOUND
STA. 406+00 TO STA. 433+16
STA. 500+96 TO STA. 510+96
STA. 533+84 TO STA. 553+95

LEGEND

1. EXISTING SUB-BASE GRANULAR MATERIAL
2. EXISTING PCC PAVEMENT, 10"
3. EXISTING HOT-MIX ASPHALT OVERLAY
4. EXISTING HOT-MIX ASPHALT SHOULDER
5. EXISTING UNDERDRAIN
6. PROPOSED BITUMINOUS MATERIALS (TACK COAT)
7. PROPOSED MICRO-SURFACING, 2-PASSES, MIX "E"
8. PROPOSED MODIFIED URETHANE PAVEMENT MARKING

△1 REVISED 6-6-17

FILE NAME = pw:\\IL004EBIDINTEG.illinois.gov:PWIDOT\Documents\IDOT Offices\District 8\Projects\D876K23-sht-typical.dgn	USER NAME = challendeke	DESIGNED -	REVISED -	STATE OF ILLINOIS DEPARTMENT OF TRANSPORTATION	TYPICAL SECTIONS	F.A.I. RTE.	SECTION	COUNTY	TOTAL SHEETS	SHEET NO.
			REVISED -			270	60-(4,5)-1RS-5	MADISON	18	6
	PLOT SCALE = 100.0000 ' / in.	CHECKED -	REVISED -					CONTRACT NO. 76K23		
Default	PLOT DATE = 6/5/2017	DATE -	REVISED -		SCALE: N/A SHEET OF SHEETS STA. TO STA.		ILLINOIS FED. AID PROJECT			

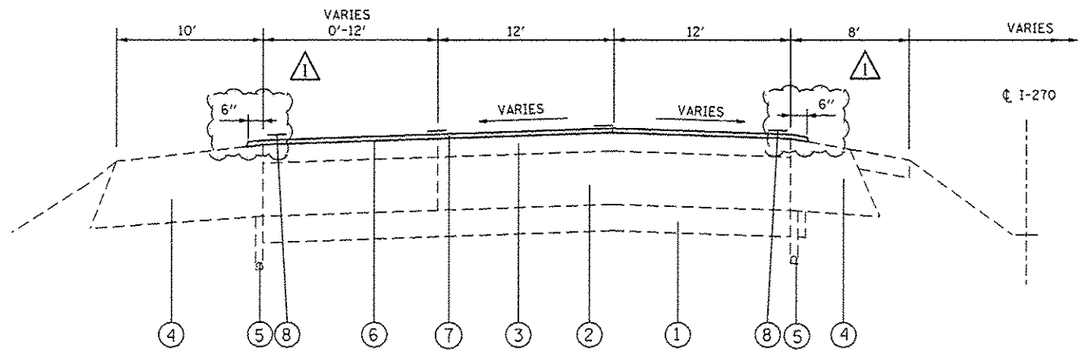

WESTBOUND
STA. 403+11 TO STA. 412+30
STA. 587+00 TO STA. 590+00
STA. 839+47 TO STA. 848+05
STA. 852+43 TO STA. 856+00

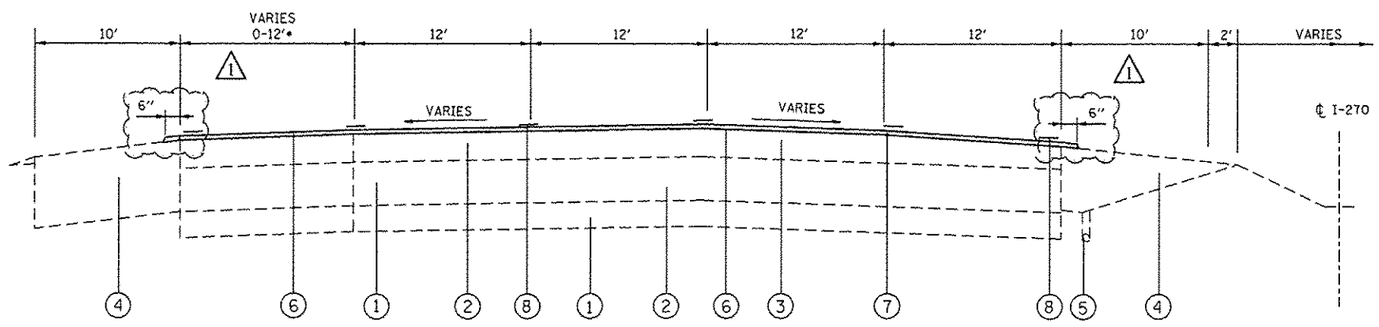

WESTBOUND
STA. 424+10 TO STA. 430+10
STA. 544+75 TO STA. 559+16
•STA. 430+10 TO STA. 438+89 - 5-12' LANES

LEGEND

1. EXISTING SUB-BASE GRANULAR MATERIAL
2. EXISTING PCC PAVEMENT, 10"
3. EXISTING HOT-MIX ASPHALT OVERLAY
4. EXISTING HOT-MIX ASPHALT SHOULDER
5. EXISTING UNDERDRAIN
6. PROPOSED BITUMINOUS MATERIALS (TACK COAT)
7. PROPOSED MICRO-SURFACING, 2-PASSES, MIX "E"
8. PROPOSED MODIFIED URETHANE PAVEMENT MARKING

1 REVISED 6-6-17

FILE NAME = pw:\\IL084EBIDINTEG.illinois.gov:PWIDOT\Documents\IDOT Offices\District 8\Projects\D876K23\DRAWING\Data\CADsheets\D876K23-sht-typical.dgn	USER NAME = challandeske	DESIGNED -	REVISED -	STATE OF ILLINOIS DEPARTMENT OF TRANSPORTATION	TYPICAL SECTIONS	F.A.I. RTE.	SECTION	COUNTY	TOTAL SHEETS	SHEET NO.
			REVISED -			270	60-(4,5)-1R5-5	MADISON	18	7
	PLOT SCALE = 100.0000 ' / in.	CHECKED -	REVISED -					CONTRACT NO. 76K23		
Default	PLOT DATE = 6/5/2017	DATE -	REVISED -		SCALE: N/A SHEET OF SHEETS STA. TO STA.		ILLINOIS FED. AID PROJECT			

RESURFACING SCHEDULE				
			MICRO-SURFACING, 2 PASSES, MIX "E"	BITUMINOUS MATERIALS TACK COAT
STATION	TO	STATION	SQ YD	POUND
EASTBOUND				
258+56	TO	317+66	16416.7	2836.8
317+66	TO	324+52	BRIDGE OMISSION 060-0042	
324+52	TO	334+05	3198.0	457.4
334+05	TO	337+78	BRIDGE OMISSION 060-0044	
337+78	TO	399+76	17184.7	2975.0
399+76	TO	402+92	BRIDGE OMISSION 060-0046	
402+92	TO	406+00	2094.0	258.7
406+00	TO	433+16	15142.0	2607.4
433+16	TO	492+66	24456.7	4284.0
492+66	TO	500+96	4530.0	697.2
500+96	TO	510+96	5990.0	960.0
510+96	TO	533+84	9808.7	1647.4
533+84	TO	553+95	11382.0	1930.6
553+95	TO	607+50	22076.7	3855.6
607+50	TO	644+37	10488.7	1769.8
644+37	TO	648+81	BRIDGE OMISSION 060-0051	
648+81	TO	685+89	10544.7	1779.8
685+89	TO	689+72	BRIDGE OMISSION 060-0319	
689+72	TO	794+05	28478.0	5007.8
794+05	TO	798+40	BRIDGE OMISSION 060-0055	
798+40	TO	857+42	16395.3	2833.0
857+42	TO	860+67	BRIDGE OMISSION 060-0057	
860+67	TO	871+97	3670.0	542.4
871+97	TO	875+58	BRIDGE OMISSION 060-0059	
875+58	TO	880+04	1846.0	214.1
		EB SUB-TOTAL	203702	34657
10% ADDITIONAL FOR ULTRA-THIN AREAS				3466 *
		EB SUB-TOTAL	203702	38123

*10% QUANTITY OF TACK COAT HAS BEEN ADDED FOR ADDITIONAL COVERAGE OVER TOP AS OF EXISTING ULTRA-THIN OVERLAY.

RESURFACING SCHEDULE				
			MICRO-SURFACING, 2 PASSES, MIX "E"	BITUMINOUS MATERIALS TACK COAT
STATION	TO	STATION	SQ YD	POUND
WESTBOUND				
258+54	TO	317+80	16459.3	2844.5
317+80	TO	324+65	BRIDGE OMISSION 060-0043	
324+65	TO	333+87	3115.3	442.6
333+87	TO	337+63	BRIDGE OMISSION 060-0045	
337+63	TO	339+97	1280.7	112.3
399+97	TO	403+11	BRIDGE OMISSION 060-0047	
403+11	TO	412+30	3720.0	551.4
412+30	TO	415+60	1976.7	237.6
415+60	TO	424+10	5190.0	816.0
424+10	TO	430+10	4256.7	648.0
430+10	TO	438+89	6516.7	1054.8
438+89	TO	522+89	34256.7	6048.0
522+89	TO	528+75	3391.3	492.2
528+75	TO	544+75	9190.0	1536.0
544+75	TO	559+16	9302.7	1556.3
559+16	TO	587+00	11792.7	2004.5
587+00	TO	590+00	1656.7	180.0
590+00	TO	664+09	10535.3	1778.2
644+09	TO	648+75	BRIDGE OMISSION 060-0052	
648+76	TO	686+16	10630.0	1795.2
686+16	TO	690+00	BRIDGE OMISSION 060-0320	
690+00	TO	793+70	28310.0	4977.6
793+70	TO	795+82	BRIDGE OMISSION 060-0055	
795+82	TO	839+47	12296.7	2095.2
839+47	TO	848+05	3516.7	514.8
848+05	TO	852+43	1824.7	210.2
852+43	TO	856+00	1846.7	214.2
856+00	TO	858+75	1756.7	198.0
858+75	TO	861+00	BRIDGE OMISSION 060-0058	
861+00	TO	885+66	7232.7	1183.7
		WB SUB-TOTAL	190055	31491
10% ADDITIONAL FOR ULTRA-THIN AREAS				3149 *
		WB SUB-TOTAL	190055	34640
		GRAND TOTAL	393757	72763

1 REVISED 6-6-17

FILE NAME = pw:\\IL084EBIDINTEG.illinois.gov:PWIDOT\Documents\IDOT Offices\District 8\Projects\D876K23-sht-sched.dgn	USER NAME = challandeake	DESIGNED -	REVISED -
		DRAWN -	REVISED -
	PLOT SCALE = 100.0000 ' / in.	CHECKED -	REVISED -
Default	PLOT DATE = 6/8/2017	DATE -	REVISED -

STATE OF ILLINOIS
DEPARTMENT OF TRANSPORTATION

EB & WB RESURFACING SCHEDULES

SCALE: N/A | SHEET 1 OF 6 SHEETS | STA. TO STA.

F.A.I. RTE.	SECTION	COUNTY	TOTAL SHEETS	SHEET NO.
270	60-(4,5)-1RS-5	MADISON	18	8

CONTRACT NO. 76K23

ILLINOIS FED. AID PROJECT

PAVEMENT REMOVAL FOR PATCHING								
MILE POINT	LANE	LENGTH (FT)	WIDTH (FT)	SQ YD				
MILE POINTS START AT ST. THOMAS ROAD (WEST TO EAST)					PARTIAL DEPTH REMOVAL, 3"			LONGITUDINAL PARTIAL DEPTH REMOVAL, 3"
EASTBOUND					TYPE I	TYPE II	TYPE IV	
0.99	2	3	12	4.00	4.00			
1.50	2	40	3	13.33		13.33		
1.94	1	3	12	4.00	4.00			
1.99	2	3	12	4.00	4.00			
2.24	1	3	12	4.00	4.00			
2.24	2	3	12	4.00	4.00			
2.35	1	3	12	4.00	4.00			
2.61	2	3	12	4.00	4.00			
2.73	3	40	3	13.33		13.33		
3.19	2	6	12	8.00		8.00		
3.19	3	6	12	8.00		8.00		
3.25	3	8	12	10.67		10.67		
3.26	3	6	12	8.00		8.00		
3.26	2	6	12	8.00		8.00		
3.28	3	4	12	5.33		5.33		
3.29	2	4	12	5.33		5.33		
3.29	3	4	12	5.33		5.33		
3.57	3	4	12	5.33		5.33		
4.35	2	4	12	5.33		5.33		
4.59	2	4	12	5.33		5.33		
4.84	1	4	12	5.33		5.33		
7.36	2	40	12	53.33			53.33	
8.14	2	10	6	6.67		6.67		
8.53	1	5	12	6.67		6.67		
8.63	1	4	12	5.33		5.33		
8.64	2	4	12	5.33		5.33		
		SUB-TOTAL			28.0	130.7	53.3	0.0
ANTICIPATED FAILURES (10%)					2.8	13.1	5.3	0.0
EB SUB-TOTAL					31	144 *	59*	0 *

*NOT TOTAL QUANTITY.
SEE WESTBOUND SCHEDULE
FOR REMAINING QUANTITY

1

RAISED REFLETIVE PAVEMENT MARKER	
MILE POINT	
EASTBOUND	EACH
0.99	0
1.50	2
1.94	0
1.99	0
2.24	0
2.24	0
2.35	0
2.61	0
2.73	2
3.19	0
3.19	0
3.25	0
3.26	0
3.26	0
3.28	0
3.29	0
3.29	0
3.57	0
4.35	0
4.59	0
4.84	0
7.36	2
8.14	0
8.53	0
8.63	0
8.64	0
EB RRPM TOTAL	6 *

*NOT TOTAL QUANTITY.
SEE WESTBOUND SCHEDULE
FOR REMAINING QUANTITY

1 REV. 6-6-2017

PAVEMENT REMOVAL FOR PATCHING							
MILE POINT	LANE	LENGTH (FT)	WIDTH (FT)	SQ YD	PARTIAL DEPTH REMOVAL, 3"		LONGITUDINAL PARTIAL
WESTBOUND MILE POINTS START AT I-55 (EAST TO WEST)					TYPE II	TYPE IV	DEPTH REMOVAL, 3" (FOOT)
0.47	1	40	6	26.67		26.67	
0.72	2	4	20	8.89	8.89		
1.03	2	4	12	5.33	5.33		
1.18	2	4	12	5.33	5.33		
1.50	2	4	12	5.33	5.33		
1.59	2	15	6	10.00	10.00		
3.08	1	4	12	5.33	5.33		
3.08	2	4	12	5.33	5.33		
3.76	1	4	12	5.33	5.33		
3.76	2	4	12	5.33	5.33		
4.25	2	4	12	5.33	5.33		
5.91	2	4	12	5.33	5.33		
6.99	3	4	12	5.33	5.33		
7.03	2-3	100	2	22.22			100
7.14	3	100	2	22.22			100
7.30	3	4	12	5.33	5.33		
7.38	3	500	2	111.11			500
7.63	3	4	12	5.33	5.33		
7.83	3	300	2	66.67			300
7.86	1	4	12	5.33	5.33		
7.86	2	4	12	5.33	5.33		
7.86	3	4	12	5.33	5.33		
7.88	3	4	12	5.33	5.33		
8.39	3	4	12	5.33	5.33		
8.82	2	4	12	5.33	5.33		
8.82	3	4	12	5.33	5.33		
9.05	1	10	12	13.33	13.33		
9.29	2	4	12	5.33	5.33		
9.30	1-2	150	2	33.33			150
9.47	1-2	160	2	35.56			160
9.47	2	4	12	5.33	5.33		
9.48	2	4	12	5.33	5.33		
9.48	2	4	12	5.33	5.33		
9.48	1	4	12	5.33	5.33		
9.48	2	4	12	5.33	5.33		
9.48	2	4	12	5.33	5.33		
9.50	2	4	12	5.33	5.33		
9.52	2	4	12	5.33	5.33		
9.53	2	4	12	5.33	5.33		
9.62	2	4	12	5.33	5.33		
9.62	2	4	12	5.33	5.33		
10.89	2	4	12	5.33	5.33		
11.03	2	4	12	5.33	5.33		
		SUB-TOTAL			208.2	26.7	1310
ANTICIPATED FAILURES (10%)					20.8	2.7	131
WB SUB-TOTAL					229*	29*	1441*

1

RAISED REFLECTIVE PAVEMENT MARKER	
MILE POINT	
WESTBOUND	EACH
0.47	2
0.72	0
1.03	0
1.18	0
1.50	0
1.59	0
3.08	0
3.08	0
3.76	0
3.76	0
4.25	0
5.91	0
6.99	0
7.03	2
7.14	2
7.30	0
7.38	12
7.63	0
7.83	8
7.86	0
7.86	0
7.86	0
7.88	0
8.39	0
8.82	0
8.82	0
9.05	0
9.29	0
9.30	4
9.47	4
9.47	0
9.48	0
9.48	0
9.48	0
9.48	0
9.48	0
9.50	0
9.52	0
9.53	0
9.62	0
9.62	0
10.89	0
11.03	0
WB TOTAL	34*

1 6-6-2017

*NOT TOTAL QUANTITY.
SEE EASTBOUND SCHEDULE
FOR REMAINING QUANTITY

F.A.I. RTE.	SECTION	COUNTY	TOTAL SHEETS	SHEET NO.
270	60-(4,5)-1RS-5	MADISON	18	12
		CONTRACT NO. 76K23		
		ILLINOIS FED. AID PROJECT		

PAVEMENT PATCHING						
LOCATION	LANE	LENGTH	WIDTH	AREA	PARTIAL DEPTH	LONGITUDINAL PARTIAL
MILE POINT		FT	FT	SQ YD	PATCHING	DEPTH PATCHING
MILE POINTS START AT ST. THOMAS ROAD (WEST TO EAST)					TON	TON
EASTBOUND						
0.99	2	3	12	4.00	0.70	
1.50	2	40	3	13.33	2.30	
1.94	1	3	12	4.00	0.70	
1.99	2	3	12	4.00	0.70	
2.24	1	3	12	4.00	0.70	
2.24	2	3	12	4.00	0.70	
2.35	1	3	12	4.00	0.70	
2.61	2	3	12	4.00	0.70	
2.73	3	40	3	13.33	2.30	
3.19	2	6	12	8.00	1.40	
3.19	3	6	12	8.00	1.40	
3.25	3	8	12	10.67	1.80	
3.26	3	6	12	8.00	1.40	
3.26	2	6	12	8.00	1.40	
3.28	3	4	12	5.33	0.90	
3.29	2	4	12	5.33	0.90	
3.29	3	4	12	5.33	0.90	
3.57	3	4	12	5.33	0.90	
4.35	2	4	12	5.33	0.90	
4.59	2	4	12	5.33	0.90	
4.84	1	4	12	5.33	0.90	
7.36	2	40	12	53.33	9.00	
8.14	2	10	6	6.67	1.20	
8.53	1	5	12	6.67	1.20	
8.63	1	4	12	5.33	0.90	
8.64	2	4	12	5.33	0.90	
EB TOTAL					36	0

1

PAVEMENT PATCHING						
LOCATION	LANE	LENGTH	WIDTH	AREA	PARTIAL DEPTH	LONGITUDINAL PARTIAL
MILE POINT		FT	FT	SQ YD	PATCHING	DEPTH PATCHING
MILE POINTS START AT I-55 (EAST TO WEST)					TON	TON
WESTBOUND						
0.47	1	40	6	26.67	4.50	
0.72	2	4	20	8.89	1.50	
1.03	2	4	12	5.33	0.90	
1.18	2	4	12	5.33	0.90	
1.50	2	4	12	5.33	0.90	
1.59	2	15	6	10.00	1.70	
3.08	1	4	12	5.33	0.90	
3.08	2	4	12	5.33	0.90	
3.76	1	4	12	5.33	0.90	
3.76	2	4	12	5.33	0.90	
4.25	2	4	12	5.33	0.90	
5.91	2	4	12	5.33	0.90	
6.99	3	4	12	5.33	0.90	
7.03	2-3	100	2	22.22		3.80
7.14	3	100	2	22.22		3.80
7.30	3	4	12	5.33	0.90	
7.38	3	500	2	111.11		18.70
7.63	3	4	12	5.33	0.90	
7.83	3	300	2	66.67		11.20
7.86	1	4	12	5.33	0.90	
7.86	2	4	12	5.33	0.90	
7.86	3	4	12	5.33	0.90	
7.88	3	4	12	5.33	0.90	
8.39	3	4	12	5.33	0.90	
8.82	2	4	12	5.33	0.90	
8.82	3	4	12	5.33	0.90	
9.05	1	10	12	13.33	2.30	
9.29	2	4	12	5.33	0.90	
9.30	1-2	150	2	33.33		5.60
9.47	1-2	160	2	35.56		6.00
9.47	2	4	12	5.33	0.90	
9.48	2	4	12	5.33	0.90	
9.48	2	4	12	5.33	0.90	
9.48	1	4	12	5.33	0.90	
9.48	2	4	12	5.33	0.90	
9.48	2	4	12	5.33	0.90	
9.50	2	4	12	5.33	0.90	
9.52	2	4	12	5.33	0.90	
9.53	2	4	12	5.33	0.90	
9.62	2	4	12	5.33	0.90	
9.62	2	4	12	5.33	0.90	
10.89	2	4	12	5.33	0.90	
11.03	2	4	12	5.33	0.90	
WB TOTAL					23	38

1

1 REV. 6-6-2017