CODE NO.	ITEM DESCRIPTION	UNIT	TOTAL QUANTITY	us 20 ROADWAY 0003 90% FED 10% STATE	1-39 ROADWAY 0003 90% FED 10% STATE	RAMPS BD & DB ROADWAY 0003 90% FED 10% STATE	us 20, MULFORD & LINDEN ROADWAY 0004 90% FED 10% STATE	RAMPS DA, AD & BD ROADWAY 0004 90% FED 10% STATE	BRIDGE SN 101-0207 0010 90% FED 10% STATE	BRIDGE SN IOI-0215 0010 90% FED 10% STATE	BRIDGE SN IOI-0204 0010 90% FED 10% STATE	BRIDGE SN IOI-0216 0010 90% FED 10% STATE	BRIDGE SN 101-0212 0010 90% FED 10% STATE	ROADWAY LIGHTING us 20 0021 90% FED 10% STATE	ROADWAY LIGHTING 1-39 0021 90% FED 10% STATE	ROADWAY SIGNING 1-39 0044 90% FED 10% STATE	ROADWAY SIGNING OTHER 0044 90% FED 10% STATE
51203900	TEST PILE STEEL HP14X89	EACH	6							4	2						
51204000	TEST PILE STEEL HP14X 102	EACH	2										2				
51204650	PILE SHOES	EACH	120							92	12		16				
51265001	DRILLING AND SETTING PILES (IN SOIL)	CU FT	2,366.8	3							2,366.8	3					
51265002	DRILLING AND SETTING PILES (IN ROCK)	CU FT	1,188.0								1,188.0						
51500100	NAME PLATES	EACH	5						1	1	1	1	1				
52000110	PREFORMED JOINT STRIP SEAL	FOOT	305						82.0	108.0	115.0						
52100010	ELASTOMERIC BEARING ASSEMBLY, TYPE I	EACH	13							7		6					
52100020	ELASTOMERIC BEARING ASSEMBLY, TYPE 2	EACH	7							7							
52100520	ANCHOR BOLTS, 1"	EACH	124						48	28	24	24					
52100530	ANCHOR BOLTS, 1 1/4"	EACH	24								24						
52100540	ANCHOR BOLTS, 1 1/2"	EACH	28							28							
52200020	TEMPORARY SOIL RETENTION SYSTEM	SQ FT	7,996			1,371	4,803	1,106			716						
52200500	MECHANICALLY STABILIZED EARTH RETAINING WALL	SQ FT	10,271							10,271							

* SPECIALTY ITEM
\# NON-PARTICIPATING ITEM

3 REV. 6/6/23 REV. 5/12/23 REV. 5/4/23

DRAINAGE SCHEDULE - PIPES

PIPE ID	STRUCTURES		INVERTS		LENGTH	SLOPE	PAY ITEM							
							542A2749	542A3391	542A3403	542JA024	542JA072	550A0120	550A0160	550A0410
	UPSTREAM	DOWNSTREAM	UPSTREAM	DOWNSTREAM			PIPE CULVERTS, CLASS A, TYPE 4 24"	PIPE CULVERTS, CLASS A, TYPE 5 36"	PIPE CULVERTS, CLASS A, TYPE 5 48"	PIPE CULVERTS, CLASS A 24" (JACKED)	PIPE CULVERTS, CLASS A 72" (JACKED)	STORM SEWERS, CLASS A, TYPE 1 24"	STORM SEWERS, CLASS A, TYPE 1 36"	STORM SEWERS, CLASS A, TYPE 2 24"
-	-	-	(FT)	(FT)	(FT)	(%)	FOOT	FOOT	FOOT	FOOT	FOOT	FOOT	FOOT	FOOT
P-E325	E325	E322	820.00	819.00	249	0.40	-	-	-	-	-	-	-	-
P-E330	E330	E325	822.00	820.00	297	0.67	-	-	-	-	-	-	-	-
P-E905	E905	E900	845.96	845.82	19	0.74	-	-	-	-	-	-	-	-
P-F103	F103	F100	801.30	801.00	120	0.25	-	-	-	-	-	-	-	-
P-F106	F106	F103	801.60	801.30	138	0.22	-	-	-	-	-	-	-	-
P-F108	F108	F106	802.20	802.10	20	0.50	-	-	-	-	-	-	-	-
P-F110	F110	F108	803.50	803.20	7	4.29	-	-	-		-	-	-	7
P-F205	F205	F200	811.20	811.00	104	0.19	-	-	-	73 △3	-	-	-	31 △3
P-F207	F207	F204	806.10	806.00	255	0.04	-	-	-	-	-	-	-	-
P-F209	F209	F207	807.00	806.70	40	0.75	-	-	-	-	-	-	-	-
P-F210	F210	F205	811.50	811.20	12	2.50	-	-	-	-	-	-	-	12
P-F220	F220	F210	811.90	811.50	195	0.21	-	-	-	-	-	-	-	195
P-F225	F225	F220	813.27	813.17	12	0.83	-	-	-	-	-	-	-	12
P-F230	F230	F220	812.40	811.90	195	0.26	-	-	-	-	-	-	-	195
P-F235	F235	F230	812.60	812.40	12	1.67	-	-	-	-	-	-	-	12
P-F274	F274	F272	817.38	815.00	177	1.34	-	-	-	-	-	-	-	-
P-F276	F276	F274	819.50	817.38	69	3.07	-	-	-	-	-	-	-	-
P-F305	F305	F300	805.30	805.00	71	0.42	-	-	-	-	-	-	-	-
P-F507	F507	F504	812.50	812.00	142	0.35	-	-	-	-	-	-	-	-
P-F509	F509	F507	813.00	812.50	72	0.69	-	-	-	-	-	-	-	-
P-F510	F510	F507	812.75	812.50	69	0.36	-	-	-	-	-	-	-	69
P-F513	F513	F510	812.78	812.75	5	0.60	-	-	-	-	-	-	-	5
P-F515	F515	F513	812.80	812.78	5	0.40	-	-	-	-	-	-	-	5
P-F520	F520	F507	812.90	812.50	119	0.34	-	-	-	-	-	-	-	119
P-F525	F525	F520	813.00	812.90	15	0.67	-	-	-	-	-	-	-	15
P-F530	F530	F520	813.50	812.90	175	0.34	-	-	-	-	-	-	-	175
P-F535	F535	F530	813.60	813.50	15	0.67	-	-	-	-	-	-	-	15
P-F615	F615	F610	815.00	814.00	91	1.10	-	-	-	-	-	-	-	-
P-F815	F815	F810	829.15	817.00	20	60.75	-	-	-	-	-	-	-	-
P-F905	F905	F900	843.26	843.18	9	0.89	-	-	-	-	-	-	-	-
P-F915	F915	F910	843.96	843.88	18	0.44	-	-	-	-	-	-	-	-
P-F925	F925	F920	850.07	849.95	27	0.44	-	-	-	-	-	-	-	-
P-F935	F935	F930	849.68	849.64	7	0.57	-	-	-	-	-	-	-	-
P-G156	G156	G155	786.80	786.50	60	0.50	-	-	-	-	-	-	-	-
P-G158	G158	G156	787.50	786.80	29	2.41	-	-	-	-	-	-	-	29
P-G160	G160	G156	788.19	788.00	35	0.54	-	-	-	-	-	-	-	-

DRAINAGE SCHEDULE - PIPES

PIPE ID	STRUCTURES		INVERTS		LENGTH	SLOPE	PAY ITEM							
							542A2749	542A3391	542A3403	542JA024	542JA072	550A0120	550A0160	550A0410
	UPSTREAM	DOWNSTREAM	UPSTREAM	DOWNSTREAM			PIPE CULVERTS, CLASS A, TYPE 4 24"	PIPE CULVERTS, CLASS A, TYPE 5 36"	PIPE CULVERTS, CLASS A, TYPE 5 48"	PIPE CULVERTS, CLASS A 24" (JACKED)	PIPE CULVERTS, CLASS A 72" (JACKED)	STORM SEWERS, CLASS A, TYPE 1 24"	STORM SEWERS, CLASS A, TYPE 1 36"	STORM SEWERS, CLASS A, TYPE 2 24"
-	-	-	(FT)	(FT)	(FT)	(%)	FOOT	FOOT	FOOT	FOOT	FOOT	FOOT	FOOT	FOOT
P-G452	G452	G450	803.85	803.75	11	0.91	-	-	-	-	-	-	-	11
P-G455	G455	G450	803.40	802.75	193	0.34	-	-	-	-	-	-	-	-
P-G457	G457	G455	804.50	804.40	11	0.91	-	-	-	-	-	-	-	11
P-G460	G460	G455	804.10	803.40	193	0.36	-	-	-	-	-	-	-	-
P-G462	G462	G460	805.20	805.10	11	0.91	-	-	-	-	-	-	-	11
P-G482	G482	G410	792.80	792.60	33	0.61	-	-	-	-	-	-	-	-
P-G485	G485	G482	793.20	792.80	92	0.43	-	-	-	-	-	-	-	-
P-G535	G535	G530	810.30	810.30	49	0.00	-	-	-	-	-	-	-	49
P-G545	G545	G540	804.06	804.00	7	0.86	-	-	-	-	-	-	-	-
P-G650	G650	G645	785.30	785.20	50	0.20	-	-	-	-	-	-	-	-
P-G710	G710	G700	785.50	785.00	211	0.24	-	-	-	-	-	-	-	-
P-G810	G810	G800	785.50	784.20	211	0.62	-	-	-	-	-	-	-	-
P-G843	G843	G840	783.70	783.50	15	1.33	-	-	-	-	-	15	-	-
P-G845	G845	G843	783.80	783.70	10	1.00	-	-	-	-	-	10	-	-
P-G855	G855	G852	784.20	784.00	5	4.00	-	-	-	-	-	-	-	5
P-G857	G857	G855	784.37	784.20	106	0.16	-	-	-	-	-	-	-	-
P-G859	G859	G857	784.50	784.37	81	0.16	-	-	-	-	-	-	-	-
P-G860	G860	G857	787.42	787.37	10	0.50	-	-	-	-	-	-	-	10
P-G865	G865	G860	787.52	787.42	12	0.83	-	-	-	-	-	-	-	12
P-G870	G870	G860	788.01	787.42	118	0.50	-	-	-	-	-	-	-	118
P-G875	G875	G870	788.11	788.01	12	0.83	-	-	-	-	-	-	-	12
P-G905	G905	G900	824.54	824.46	9	0.89	-	-	-	-	-	-	-	-
P-G915	G915	G910	824.54	824.47	11	0.64	-	-	-	-	-	-	-	-
P-G925	G925	G920	824.49	824.37	15	0.80	-	-	-	-	-	-	-	-
P-G935	G935	G930	824.49	824.42	14	0.50	-	-	-	-	-	-	-	-
UNDISTRIBUTED							-	-	-		-	-	-	73 3
TOTAL							279	210	235	73 3	413	279	3[illegible]	2549

NOTE:

[1] UNDISTRIBUTED QUANTITY TO BE APPLIED WHERE EXISTING PIPES ARE REMOVED BELOW PROPOSED SUBGRADE

[2] SEE UNDERDRAIN SCHEDULE FOR SLOTTED DRAIN

MODEL: Pipe Schedule
FILE NAME: pw://pwnesis-pw.bentley.com:pwnesis-pw-01/Documents/10800s/10800.00/Final_Docs/CAD_Sheets/Drainage/D261CE67-Sh-01-Sh-05-CH-14.dgn

USER NAME = afaulkner	DESIGNED - A. FAULKNER	REVISED - 3 06/07/2023	STATE OF ILLINOIS DEPARTMENT OF TRANSPORTATION
	DRAWN - A. FAULKNER	REVISED -	
PLOT SCALE = 0.16666633 ' / in.	CHECKED - C. RUTKOWSKI	REVISED -	
PLOT DATE = 6/6/2023	DATE - 03/31/2023	REVISED -	

DRAINAGE SCHEDULES

SCALE: N/A | SHEET 49 OF 51 SHEETS | STA. | TO STA.

F.A.I. RTE.	SECTION	COUNTY	TOTAL SHEETS	SHEET NO.
39	(5)RS & (5&5HB)RC	WINNEBAGO	2192	579
		CONTRACT NO. 64B13		
	ILLINOIS	FED. AID PROJECT		

3 REV. 6/6/23

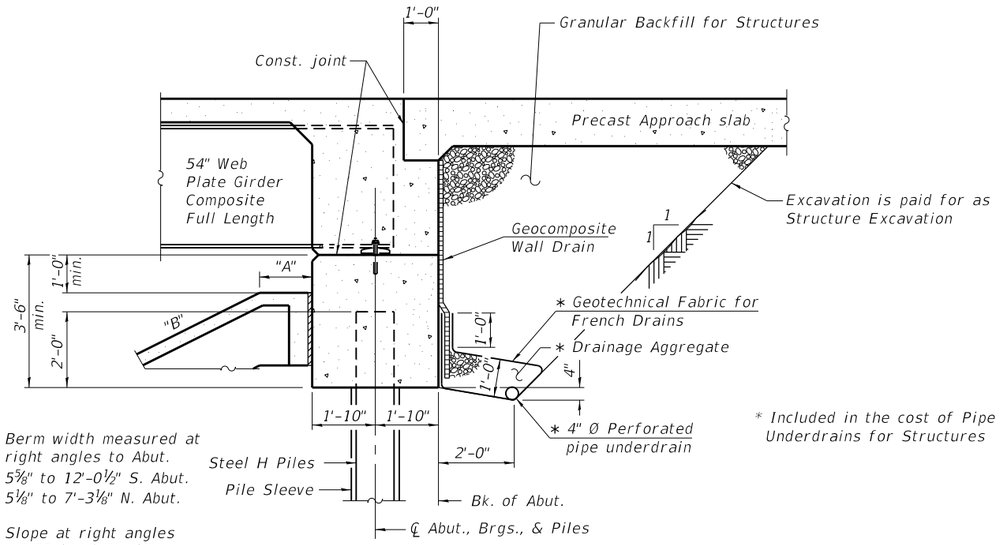

"A" - Berm width measured at right angles to Abut.
5⅝" to 12'-0½" S. Abut.
5⅛" to 7'-3⅛" N. Abut.

"B" - Slope at right angles
1:2.65 (V:H) S. Abut.
1:2.32 (V:H) N. Abut.

SECTION THRU INTEGRAL ABUTMENT

(Horiz. dim. @ Rt. ∠'s)

* Included in the cost of Pipe Underdrains for Structures

INDEX OF SHEETS

1. General Plan and Elevation
2. General Data
3-4. Stage Construction Details
5-8. Top Of Slab Elevations
9. Top Of South Approach Slab Elevations
10. Top Of North Approach Slab Elevations
11. Superstructure
12-13. Superstructure Details
14. Diaphragm Details
15. Drainage Scupper, DS-11
16-18. Precast Bridge Approach Slab Details
19. Preformed Joint Strip Seal
20. Framing Plan
21. Structural Steel Details
22. Design Data Tables
23. Bearing Details
24. South Abutment
25. North Abutment
26-27. Abutment Details
28. Pier 1
29. Pier 2
30. Bar Splicer Details
31. HP Pile Details
32. Concrete Parapet Slipforming Option
33-37. Boring Logs

TOTAL BILL OF MATERIAL

ITEM	UNIT	SUPER	SUB	TOTAL
Structure Excavation	Cu. Yd.		5,572	5,572
Rock Excavation for Structures	Cu. Yd.		17	17
Floor Drains	Each	14		14
Concrete Structures	Cu. Yd.		371.5	371.5
Concrete Superstructure	Cu. Yd.	578.3		578.3
Protective Coat	Sq. Yd.	2,165		2,165
Furnishing & Erecting Structural Steel	L. Sum	0.2		0.2
Stud Shear Connectors	Each	9,342		9,342
Reinforcement Bars, Epoxy Coated	Pound	149,670	47,130	196,800
Bar Splicers	Each		300	300
Mechanical Splicers	Each		2	2
Slope Wall 4 Inch	Sq. Yd.		1,214	1,214
Furnishing Steel Piles HP14x89	Foot		300	300
Driving Piles	Foot		300	300
Test Pile Steel HP14x89	Each		2	2
Pile Shoes	Each		12	12
Furnishing Steel Piles W14x211	Foot		~~781~~	~~781~~
Drilling and Setting Piles (In Soil)	Cu. Ft.		2,366.8	2,366.8
Drilling and Setting Piles (In Rock)	Cu. Ft.		1,188.0	1,188.0
Name Plates	Each	1		1
Preformed Joint Strip Seal	Foot	115.0		115.0
Anchor Bolts, 1"	Each	24		24
Anchor Bolts, 1¼"	Each	24		24
Temporary Soil Retention System	Sq. Ft.		716	716
Granular Backfill for Structures	Cu. Yd.		349	349
Geocomposite Wall Drain	Sq. Yd.		165	165
Pipe Underdrains for Structures 4"	Foot		239	239
Drainage Scuppers, DS-11	Each	2		2
Diamond Grinding (Bridge Section)	Sq. Yd.	1,914		1,914
Bridge Deck Grooving (Longitudinal)	Sq. Yd.	1,089		1,089
Concrete Wearing Surface, 5"	Sq. Yd.	280		280
Precast Bridge Approach Slab	Sq. Ft.	2,380		2,380

3

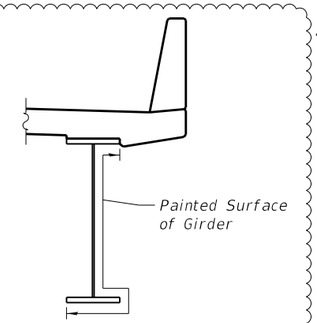

EXTERIOR FASCIAS

PAINTING LIMITS

(System 3)

3

STATION 364+92.09
BUILT BY
STATE OF ILLINOIS
F.A.I. RT. 39 SEC. (201-3)K
LOADING HL-93
STRUCTURE NO. 101-0204

NAME PLATE

See Std. 515001

Notes:

All drainage system components shall extend to 2'-0" from the end of each wingwall except an outlet pipe shall extend until intersecting with the side slopes. The pipes shall drain into concrete headwalls. (See Article 601.05 of the Standard Specifications and Highway Standard 601101).

See Sheet 1 of 37 for Section A-A.

GENERAL NOTES

Calculated Weight of Structural Steel = 27,230 lbs (M270 Grade 36)
= 581,810 lbs (M270 Grade 50)

No field welding is permitted except as specified in the contract documents.

Reinforcement bars designated (E) shall be epoxy coated.

Bearing seat surfaces shall be constructed or adjusted to the designated elevations within a tolerance of ⅛ inch (0.01 ft.). Adjustment shall be made either by grinding the surface or by shimming the bearings.

The embankment configuration shown shall be the minimum that must be placed and compacted prior to construction of the abutments.

The concrete for bridge decks finished according to Article 503.16(a) of the Standard Specifications shall be placed and compacted parallel to the skew in uniform increments along centerline of bridge. The machine used for finishing shall be set parallel to the skew for striking off and screeding the concrete.

Slopewall shall be reinforced with welded wire fabric, 6" x 6" - W4.0 x W4.0, weighing 58 lbs. per 100 sq. ft.

All new structural steel shall be metalized, unless noted otherwise. See Special Provision for "Metallizing of Structural Steel."

Fasteners shall be ASTM F 3125 Grade A325 Type 1, mechanically galvanized bolts in metallized areas.

Protective Coat shall be applied to the entire surface of the bridge deck, approach slabs and to the top and traffic face of all bridge deck and approach slab parapets.

Structure Excavation limits shall be to 1'-0" min. below the bottom of the girders except at the abutment and pier caps. For limits of Structure Excavation at the abutment and pier caps see Sheet 4 of 37. The excavation below these areas shall be paid for in the Roadway Plans.

3 The interior metallized areas shall be painted with System 1. Exterior fascia and bottom of bottom flange areas shall be metallized and shop painted using System 3. See painting limits on this sheet. The color of the final finish coat of paint shall be Blue, Munsell No. 10B 3/6.

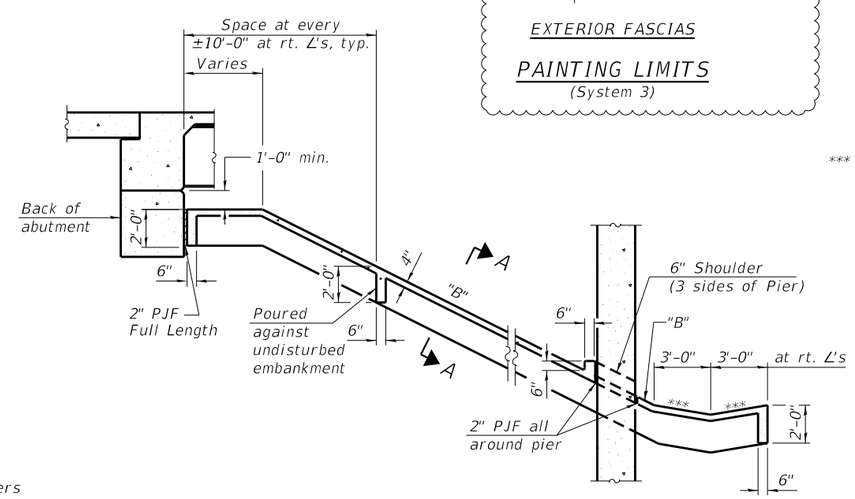

*** 1:6 (V:H)

SECTION THRU CONCRETE SLOPEWALL

(South Abutment)

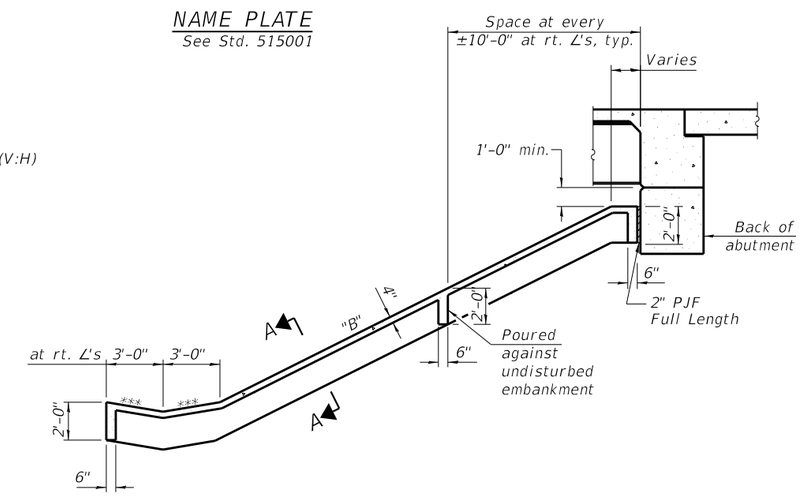

SECTION THRU CONCRETE SLOPEWALL

(North Abutment)

QUIGG ENGINEERING INC	USER NAME = rwhiteside	DESIGNED - RPW	REVISED - 3 06/07/2023	STATE OF ILLINOIS DEPARTMENT OF TRANSPORTATION
	D264C62-1010204-SHT-002-GeneralDetails	CHECKED - KFO	REVISED -	
	PLOT SCALE = 0.1667 ' / in.	DRAWN - LMC	REVISED -	
	PLOT DATE = 03/31/2023	CHECKED - MDC	REVISED -	

GENERAL DATA
STRUCTURE NO. 101-0204
SHEET 2 OF 37 SHEETS

F.A.I. RTE.	SECTION	COUNTY	TOTAL SHEETS	SHEET NO.
39	(201-3)K	WINNEBAGO	2192	864
		CONTRACT NO. 64B13		
	ILLINOIS	FED. AID PROJECT		

3 REV. 6/6/23

MODEL: Default
FILE NAME: pw:\\benesch-pw.bentley.com:benesch-pw-01\Documents\108009\108000.00\Eng_Docs\CAD_Sheets\SN 0204 Ramp DA [Quigg]\D264C62-1010204-SHT-002-GeneralDetails
6/6/2023 3:08:30 PM

Notes:
Space reinforcement in cap to miss anchor bolts.
Pour steps monolithically with cap.
The steel W-Piles shall be according to AASHTO M270 Grade 50.
Bars indicated thus 10x2-#5 etc. indicates 10 lines of bars with 2 lengths per line.
Stage I Construction includes the excavation for the Pier Cap and the construction of the Pier Cap and the drilling and setting of piles in soil and rock.
Stage II Construction includes the excavation for the Pier Stem and the construction of the Pier Stem.
See Sheet 30 of 37 for Bar Splicer Details.

PILE DATA

Type: W14x211
Nominal Required Bearing: Set in Rock
Factored Resistance Available: 2170 kip
Est. Length: 37 ft.
No. Production Piles: 11

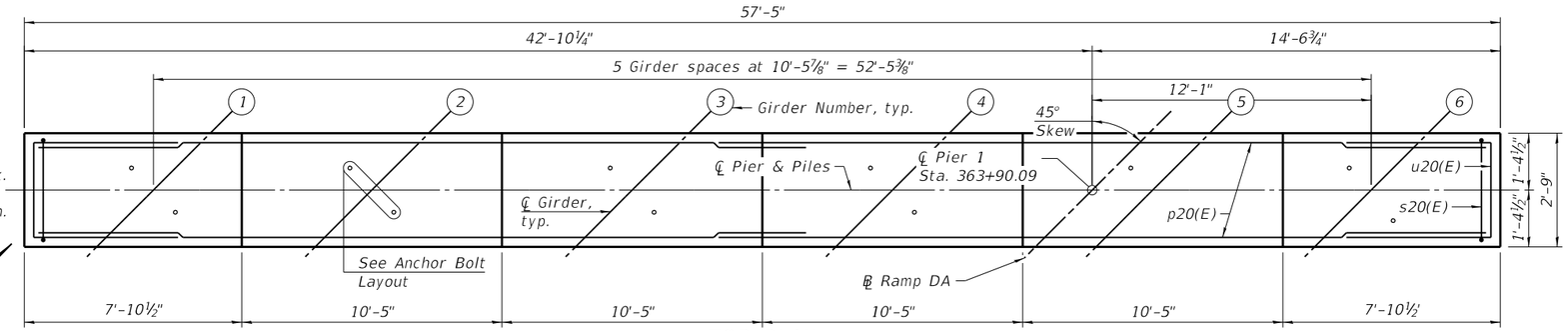

TOP PLAN

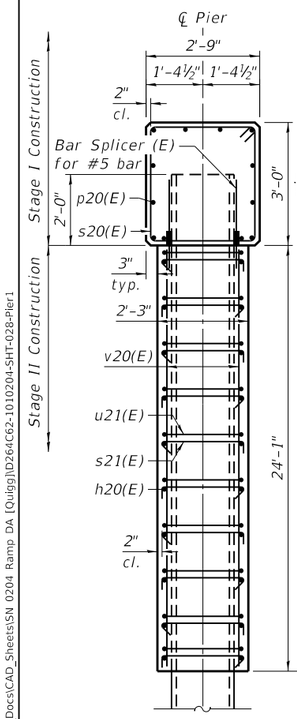

END VIEW

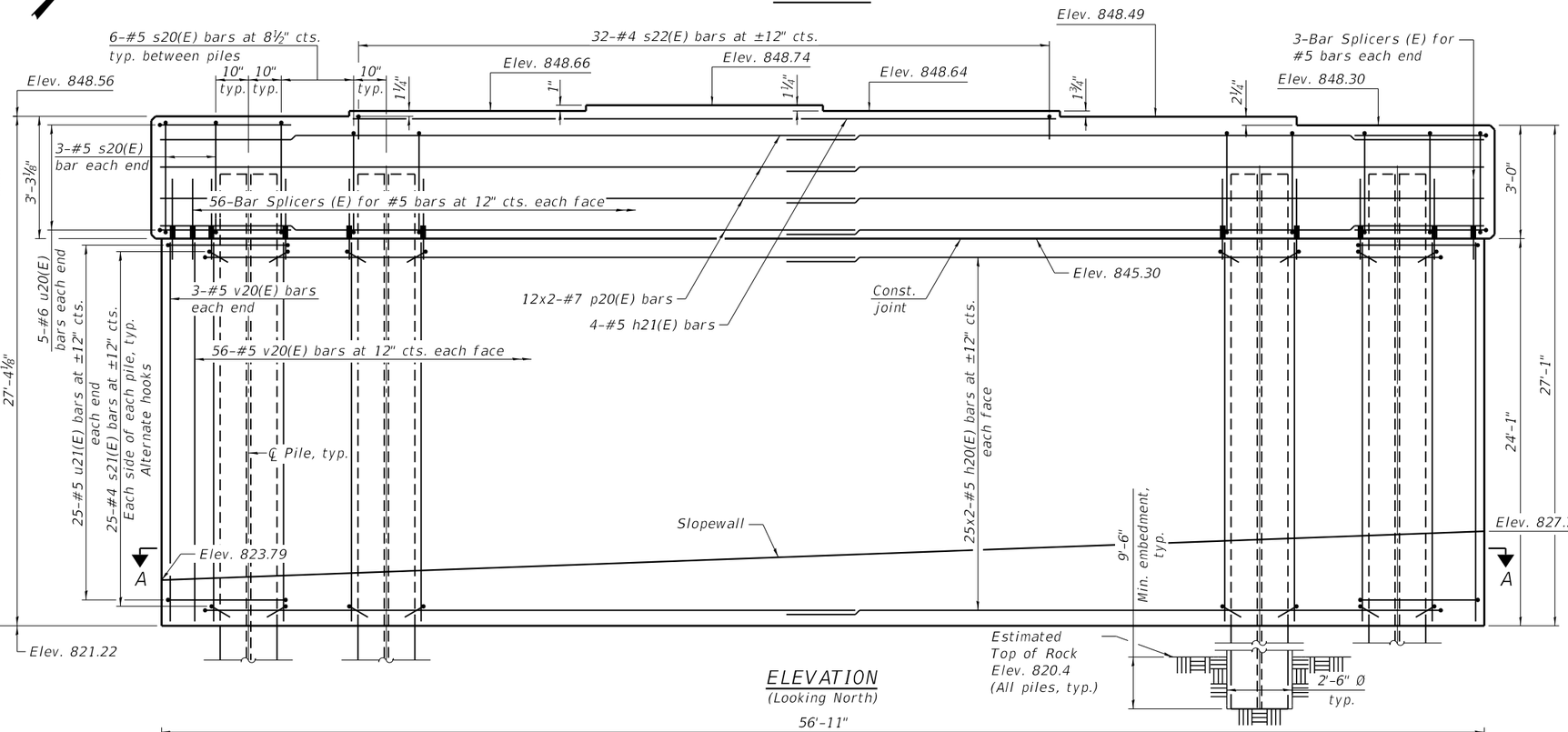

ELEVATION
(Looking North)

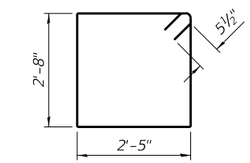

BAR s30(E)

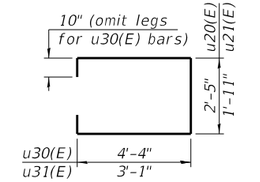

BARS u30(E) & u31(E)

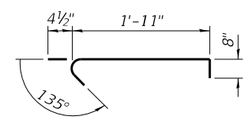

BAR s31(E)

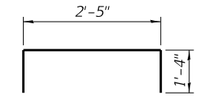

BAR s32(E)

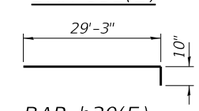

BAR h30(E)

MINIMUM BAR LAP

#5 bars = 3'-7"
#7 bars = 5'-6"

PIER 1
BILL OF MATERIAL

Bar	No.	Size	Length	Shape
h20(E)	100	#5	30'-1"	
h21(E)	4	#5	30'-11"	
p20(E)	24	#7	31'-6"	
s20(E)	66	#5	11'-1"	
s21(E)	550	#4	3'-0"	
s22(E)	32	#4	5'-1"	
u20(E)	10	#6	11'-1"	
u21(E)	50	#5	9'-9"	
v20(E)	118	#5	23'-9"	
Reinforcement Bars, Epoxy Coated			Pound	10,390
Furnishing Steel Piles W14x211			Foot	407
Concrete Structures			Cu. Yd.	133.4
Drilling and Setting Piles (In Soil)			Cu. Ft.	1,344.6
Drilling and Setting Piles (In Rock)			Cu. Ft.	513.0
Structure Excavation			Cu. Yd.	481

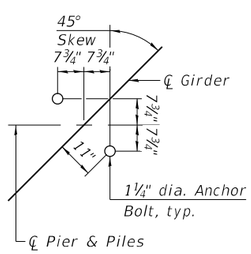

ANCHOR BOLT LAYOUT

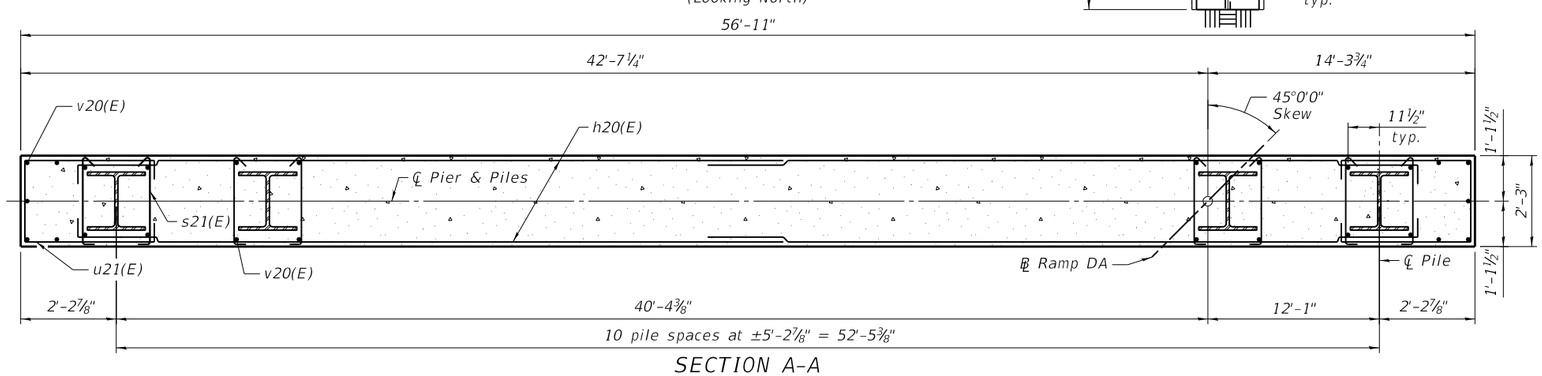

SECTION A-A

MODEL: Default
FILE NAME: pw:\\benesch-pw.bentley.com:benesch-pw-01\Documents\108009\108000.00\Eng_Docs\CAD_Sheets\SN 0204 Ramp DA [Quigg]\D264C62-1010204-SHT-028-Pier1
6/6/2023 12:33:04 PM

QUIGG ENGINEERING INC

USER NAME = rwhiteside	DESIGNED - RPW	REVISED - 3 06/07/2023	
D264C62-1010204-SHT-028-Pier1	CHECKED - KFO	REVISED -	
PLOT SCALE = 0.1667 ' / in.	DRAWN - LMC	REVISED -	
PLOT DATE = 03/31/2023	CHECKED - MDC	REVISED -	

STATE OF ILLINOIS
DEPARTMENT OF TRANSPORTATION

PIER 1
STRUCTURE NO. 101-0204
SHEET 28 OF 37 SHEETS

F.A.I. RTE.	SECTION	COUNTY	TOTAL SHEETS	SHEET NO.
39	(201-3)K	WINNEBAGO	2192	890
		CONTRACT NO. 64B13		
		ILLINOIS FED. AID PROJECT		

3 REV. 6/6/23

Notes:
Space reinforcement in cap to miss anchor bolts.
Pour steps monolithically with cap.
The steel W-Piles shall be according to AASHTO M270 Grade 50.
Bars indicated thus 10x2-#5 etc. indicates 10 lines of bars with 2 lengths per line.
Stage I Construction includes the excavation for the Pier Cap and the construction of the Pier Cap and the drillling and setting of piles in soil and rock.
Stage II Construction includes the excavation for the Pier Stem and the construction of the Pier Stem.
See Sheet 30 of 37 for Bar Splicer Details.

PILE DATA

Type: W14x211
Nominal Required Bearing: Set in Rock
Factored Resistance Available: 2170 kip
Est. Length: 34 ft.
No. Production Piles: 11

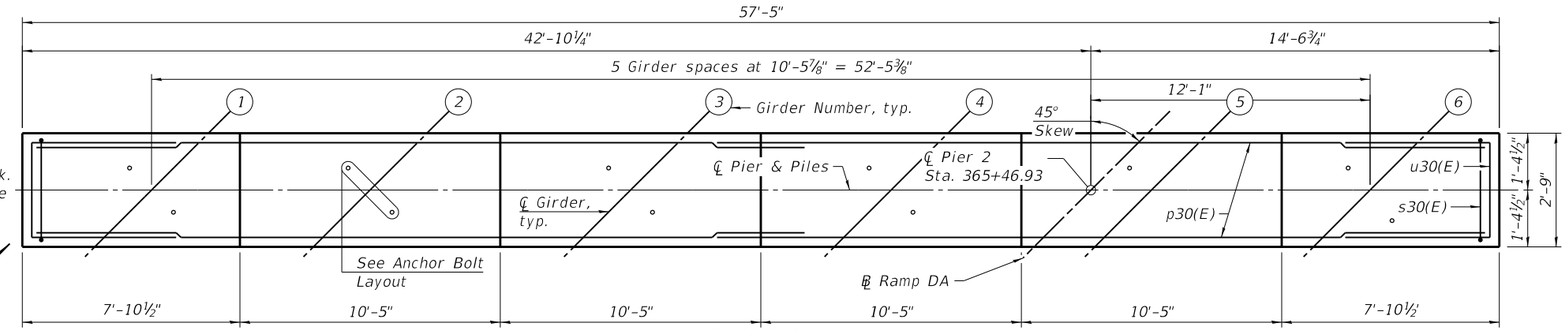

TOP PLAN

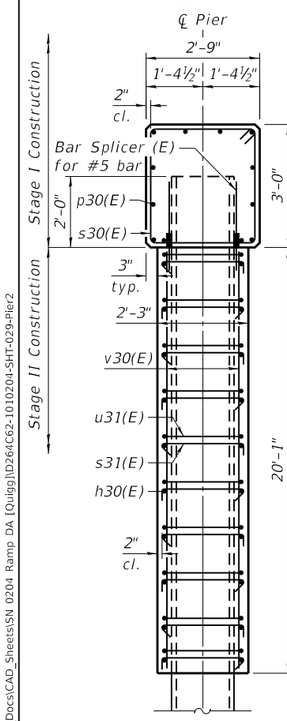

END VIEW

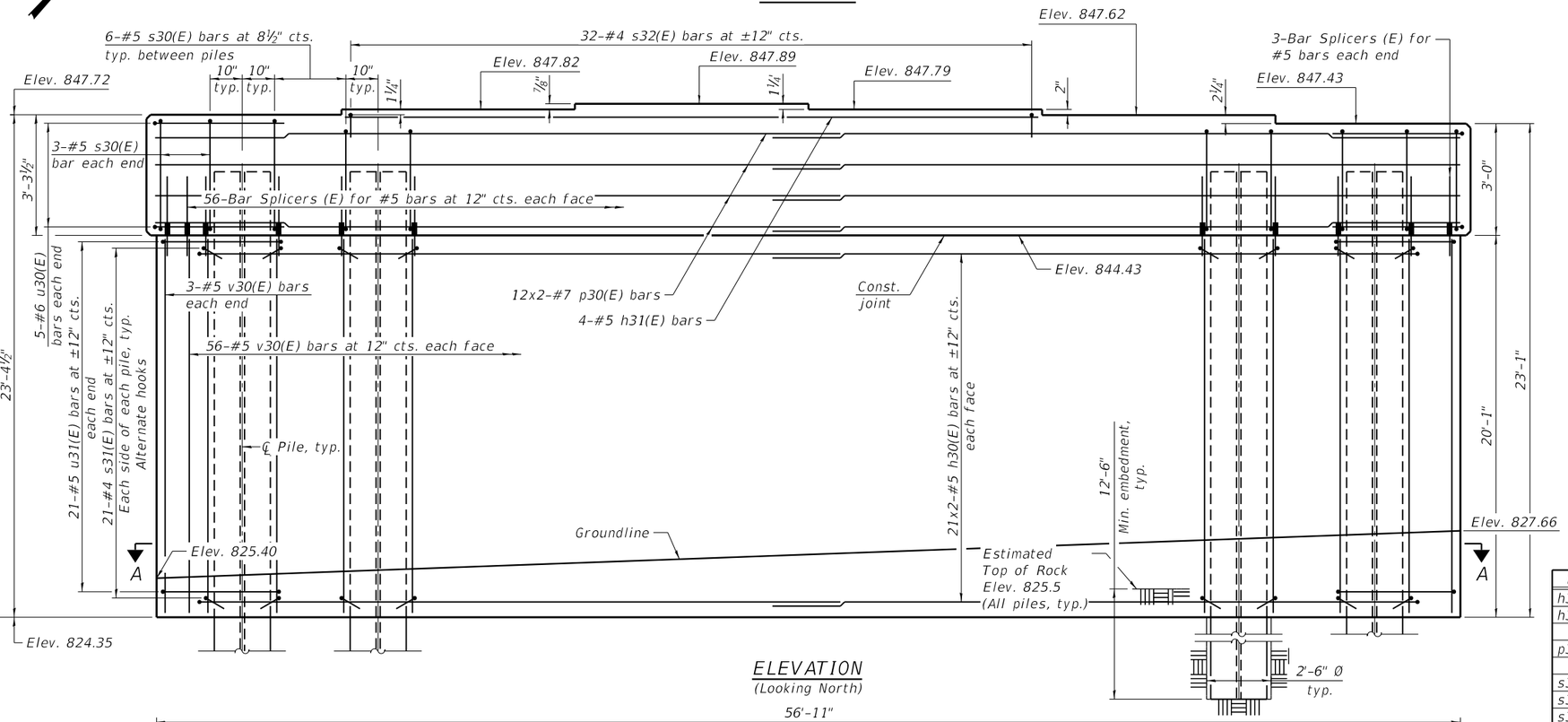

ELEVATION
(Looking North)

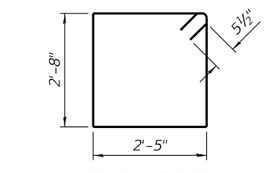

BAR s30(E)

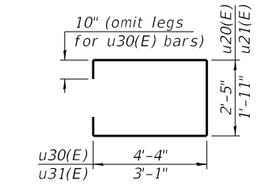

BARS u30(E) & u31(E)

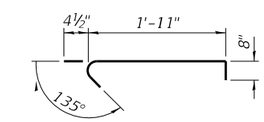

BAR s31(E)

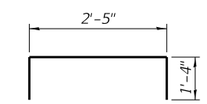

BAR s32(E)

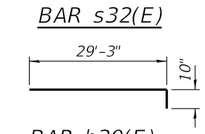

BAR h30(E)

MINIMUM BAR LAP
#5 bars = 3'-7"
#7 bars = 5'-6"

PIER 2
BILL OF MATERIAL

Bar	No.	Size	Length	Shape
h30(E)	84	#5	30'-1"	
h31(E)	4	#5	30'-11"	
p30(E)	24	#7	31'-6"	
s30(E)	66	#5	11'-1"	
s31(E)	462	#4	3'-0"	
s32(E)	32	#4	5'-1"	
u30(E)	10	#6	11'-1"	
u31(E)	42	#5	9'-9"	
v30(E)	118	#5	19'-9"	
Reinforcement Bars, Epoxy Coated			Pound	9,140
Furnishing Steel Piles W14x211			Foot	374
Concrete Structures			Cu. Yd.	114.6
Drilling and Setting Piles (In Soil)			Cu. Ft.	1,022.2
Drilling and Setting Piles (In Rock)			Cu. Ft.	675.0
Rock Excavation for Structures			Cu. Yd.	17
Structure Excavation			Cu. Yd.	408

3

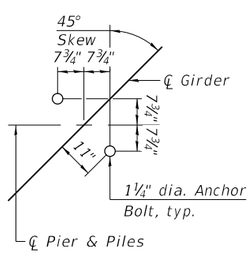

ANCHOR BOLT LAYOUT

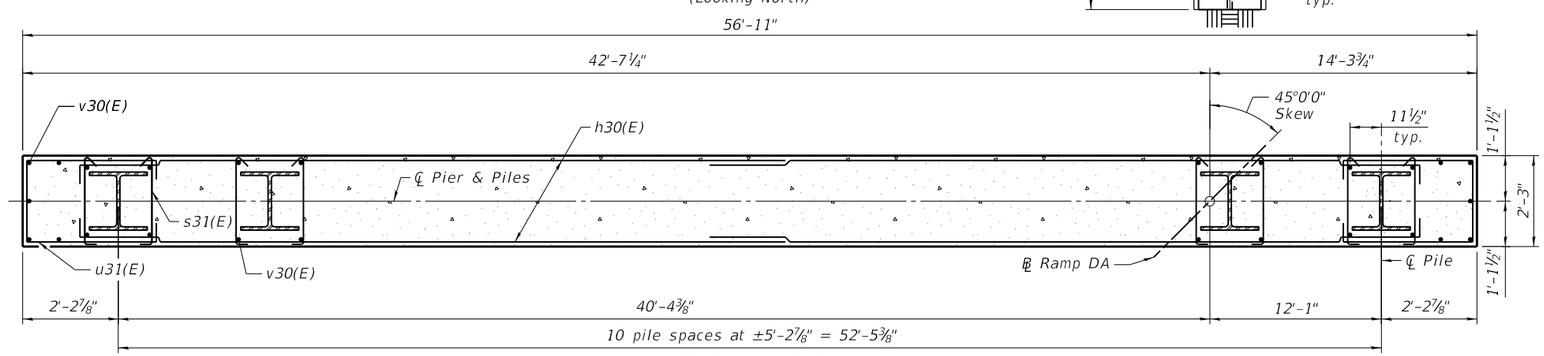

SECTION A-A

QUIGG ENGINEERING INC	USER NAME = rwhiteside	DESIGNED - RPW	REVISED - 3 06/07/2023
	D264C62-1010204-SHT-029-Pier2	CHECKED - KFO	REVISED -
	PLOT SCALE = 0.1667 ' / in.	DRAWN - LMC	REVISED -
	PLOT DATE = 03/31/2023	CHECKED - MDC	REVISED -

STATE OF ILLINOIS
DEPARTMENT OF TRANSPORTATION

PIER 2
STRUCTURE NO. 101-0204

SHEET 29 OF 37 SHEETS

F.A.I. RTE.	SECTION	COUNTY	TOTAL SHEETS	SHEET NO.
39	(201-3)K	WINNEBAGO	2192	891
		CONTRACT NO. 64B13		
		ILLINOIS	FED. AID PROJECT	

MODEL: Default
FILE NAME: pw:\\benesch-pw.bentley.com:benesch-pw-01\Documents\108000s\108000.00\Eng_Docs\CAD_Sheets\SN 0204 Ramp DA [Quigg]\D264C62-1010204-SHT-029-Pier2
6/6/2023 12:33:09 PM

3 REV. 6/6/23

INDEX OF SHEETS

1 General Plan and Elevation
2 General Data
3 Slope Wall and Pile Layout
4-6 Top of Slab Elevations
7 Top of S Approach Slab Elevations
8 Top of N Approach Slab Elevations
9 Superstructure
10 Superstructure Details
11 Concrete Parapet Slipforming Option
12 Diaphragm Details
13-15 Precast Bridge Approach Slab
16 Modified Preformed Joint Strip Seal
17 Framing Plan
18-19 Structural Steel Details
20 Guided Expansion HLMR Pot Bearing Details
21 Fixed Bearing Details
22-23 South Abutment
24-25 North Abutment
26 Pier Details
27 Metal Shell Pile Details
28-31 Soil Boring Logs

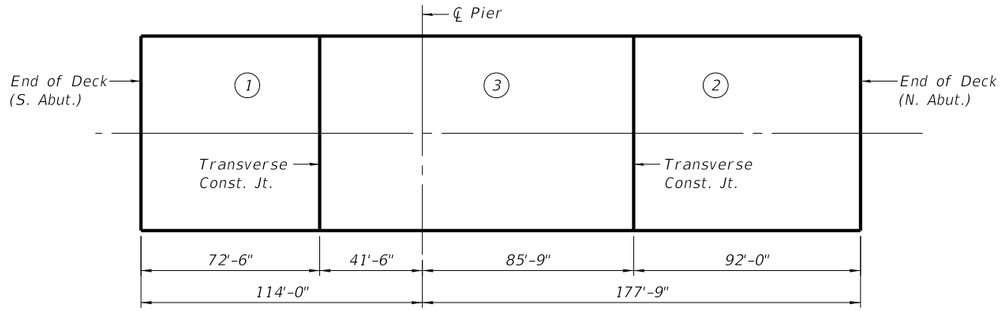

DECK POURING SEQUENCE

When the deck pour is stopped for the day at one or more of the bonded construction joints in the deck pouring sequence as shown, the next pour shall not be made until both of the following are met:

1. At least 72 hours have elapsed from the end of the previous pour.
2. The concrete strength shall have attained a minimum flexural strength of 675 psi or a minimum compression strength of 4,000 psi

TOTAL BILL OF MATERIAL

ITEM	UNIT	SUPER	SUB	TOTAL
Removal Of Existing Structures No. 5	Each	0.5	0.5	1
Protective Shield	Sq Yd	1,048	———	1,048
Structure Excavation	Cu Yd	———	600	600
Concrete Structures	Cu Yd	25.3	166.7	192.0
Concrete Superstructure	Cu Yd	501.4	———	501.4
Protective Coat	Sq Yd	1,862	81	1,943
Furnishing And Erecting Structural Steel	L. Sum	0.2	———	0.2
Stud Shear Connectors	Each	4,488	———	4,488
Reinforcement Bars, Epoxy Coated	Pound	127,710	27,720	155,430
Slope Wall 4 Inch	Sq Yd	———	437	437
Furnishing Metal Shell Piles 12"x0.25"	Foot	———	880	880
Driving Piles	Foot	———	880	880
Test Pile Metal Shells	Each	———	3	3
Name Plates	Each	1	———	1
Preformed Joint Strip Seal	Foot	82	———	82
Anchor Bolts, 1"	Each	———	48	48
Granular Backfill For Structures	Cu Yd	———	263	263
Geocomposite Wall Drain	Sq Yd	———	140	140
Pipe Underdrains For Structures 4"	Foot	———	210	210
Diamond Grinding (Bridge Section)	Sq Yd	1,407	———	1,407
Bridge Deck Grooving (Longitudinal)	Sq Yd	938	———	938
Concrete Wearing Surface, 5"	Sq Yd	280	———	280
Precast Bridge Approach Slab	Sq Ft	2,380	———	2,380
High Load Multi-Rotational Bearings, Pot Guided Expansion, 600K	Each	———	6	6

GENERAL NOTES:

Fasteners shall be ASTM F3125 Grade A325 Type 1, Hot-Dip Galvanized Bolts in metalized areas. Bolts 7/8" Ø, holes 15/16" Ø unless otherwise noted.

Calculated weight of Structural Steel = 625,640 lbs. (Grade 50),
Calculated weight of Structural Steel = 18,830 lbs. (Grade 36)

All new structural steel to be metalized. See Special Provisions for "Metalizing of Structural Steel".

3 The interior metallized areas shall be painted with System 1. Exterior fascia and bottom of bottom flange areas shall be metallized and shop painted using System 3. See painting limits on detail on this sheet. The color of the final finish coat of paint shall be Blue, Munsell No. 10B 3/6.

The existing structural steel coating contains lead. The Contractor shall take appropriate precautions to deal with the presence of lead on this project.

No field welding is permitted except as specified in the contract documents.

Reinforcement bars designated (E) shall be epoxy coated.

Bearing seat surfaces shall be constructed or adjusted to the designated elevations within a tolerance of 1/8 in. (0.01 ft.) Adjustments shall be made by grinding the surface or by shimming the Bearings.

The existing structure (S.N. 101-0131) carrying Mulford Road over I-39 & U.S. 20 shall removed per Article 501.04 of the Standard Specifications. See Staging Plans in the roadway plans for timing of removal and related staging information. Please reference the "Additional Information" provided to bidders for existing structure plans.

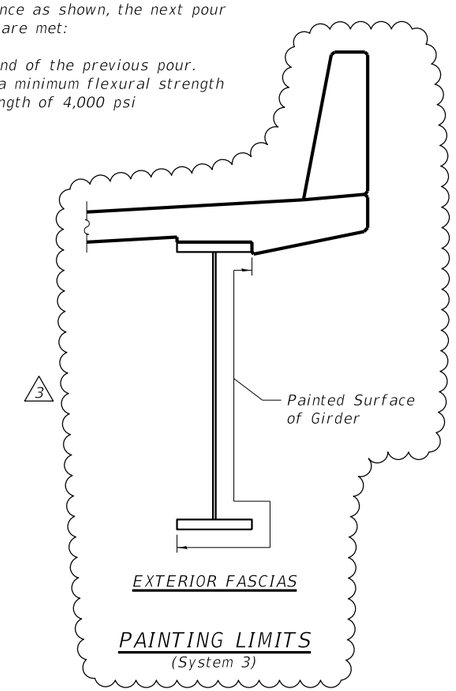

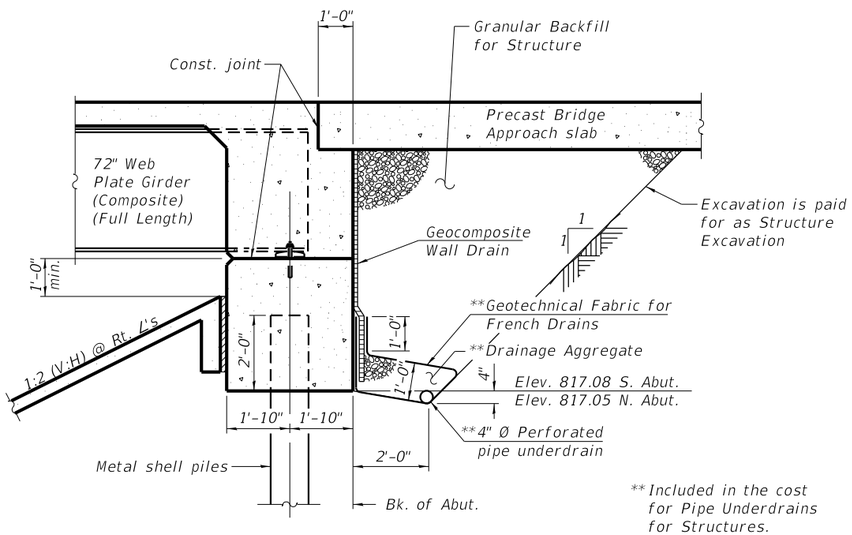

** Included in the cost for Pipe Underdrains for Structures.

SECTION THRU INTEGRAL ABUTMENT

(Horiz. dim. @ Rt. ∠'s)

All drainage componants shall extend to 2'-0" from the end of each wingwall, except an outlet pipe shall extend until intersecting with theside slopes. The pipe shall drain into concrete headwalls. (see Artical 601.05 of the Standard Specifications and Highwall Standard 601101).

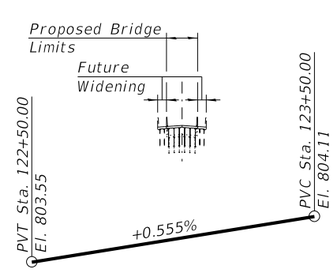

PROPOSED PROFILE

Along I-39 S.B.L. (Ramp BD) Outside E.O.P.

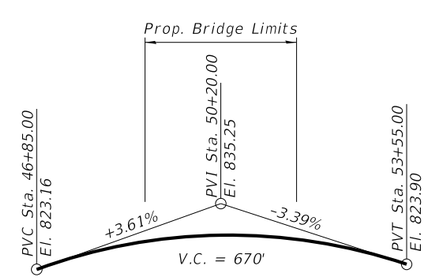

PROPOSED PROFILE

Along ℄ Mulford Road.
The profile grade shows the final elevations after grinding.

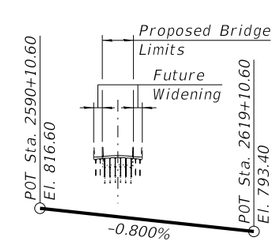

PROPOSED PROFILE

Along I-39 NBL and US-20 Inside E.O.P.

MODEL: Default
FILE NAME: pw:\\benesch-pw.bentley.com:benesch-pw-01\Documents\10800s\10800.00\Eng_Docs\CAD_Sheets\SN 0207 Mulford (WHA)\D64C62-1010207-002-GPE.dgn

WILLETT HOFMANN & ASSOCIATES INC
ENGINEERING ARCHITECTURE LAND SURVEYING
809 EAST 2ND STREET, DIXON, IL 61021-0367
T 815-284-3381 DESIGN FIRM: #184-000918

USER NAME = frank	DESIGNED - EEL	REVISED -	3 06/07/2023
	CHECKED - DCB	REVISED -	
	DRAWN - FDL	REVISED -	
PLOT DATE = 6/6/2023	DATE - 03/31/2023	REVISED -	

STATE OF ILLINOIS
DEPARTMENT OF TRANSPORTATION

SHEET 2 OF 31 SHEETS

F.A.I RTE.	SECTION	COUNTY	TOTAL SHEETS	SHEET NO.
39	(201-3)K	WINNEBAGO	2192	925
	WHA # 1390D19	CONTRACT NO. 64B13		
		ILLINOIS	FED. AID PROJECT	

3 REV. 6/6/23