F.A.I. RTE.	SECTION	COUNTY	TOTAL SHEETS	SHEET NO.
94	*	COOK	860	240
STA.		TO STA.		
FED. ROAD DIST. NO.	ILLINOIS	FED. AID PROJECT		

* (1516.1, 1717 & 1818) R-8

62694

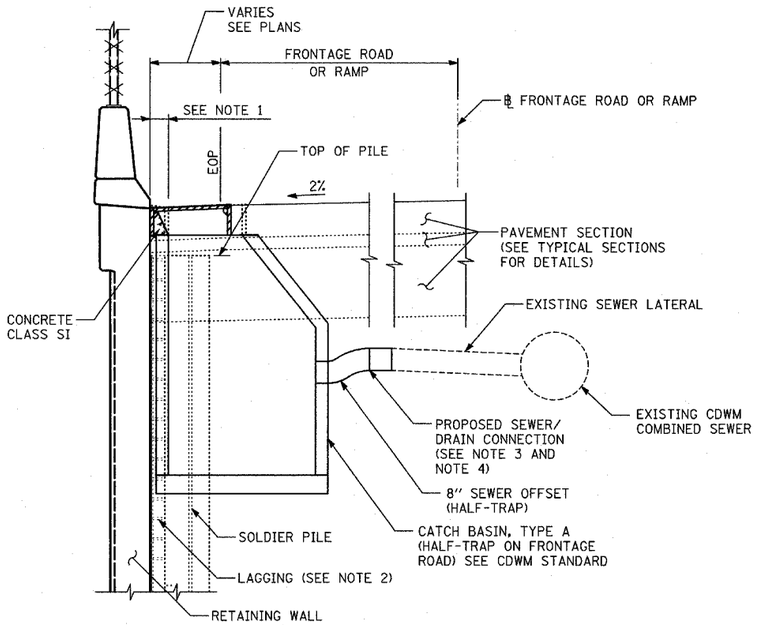

CROSS SECTION THRU WALL/CATCH BASIN

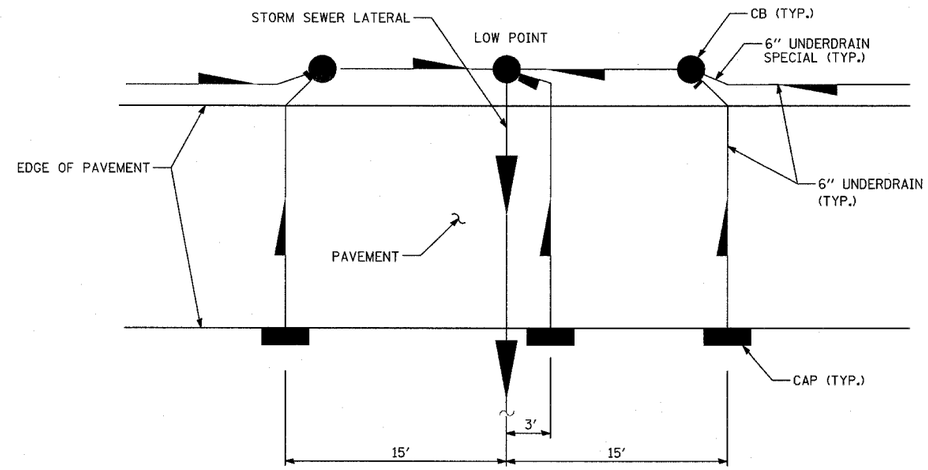

PIPE UNDERDRAIN 6", AT ROADWAY SAGS

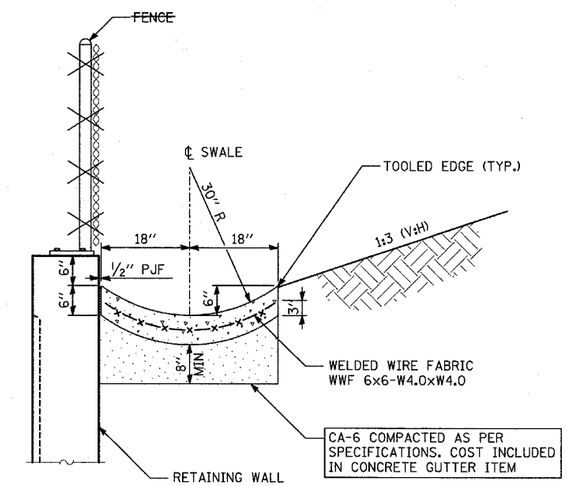

CONCRETE GUTTER

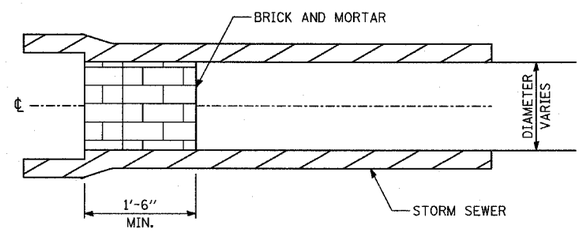

STORM SEWER PLUG

NOTES:

1. THIS WORK CONSISTS OF FURNISHING BRICKS AND MORTAR AS SHOWN AND AS DIRECTED BY THE ENGINEER AT LOCATIONS SHOWN IN THE PLANS TO PLUG THE EXISTING AND/OR PROPOSED STORM SEWER LATERAL STUBS. THIS PLUG WILL BE REMOVED BY OTHERS FOR FUTURE EXTENSION OF THE STORM SEWER.
2. THIS WORK SHALL NOT BE PAID FOR SEPARATELY, PER ARTICLE 550.05.

NOTES:

1. SLOPE SHOULDER AREA BETWEEN CATCH BASIN GRATE AND BARRIER WALL TOWARDS GRATE WHEN USING TYPE 1 F&G.
2. ALL CATCH BASINS ARE LOCATED TO AVOID SOLDIER PILES AND ENCASEMENT. WOOD LAGGING IS REQUIRED TO BE REMOVED FOR THE CONTACT AREA BETWEEN THE CATCH BASIN AND WALL TO ALLOW FOR CATCH BASIN CONSTRUCTION. COST INCLUDED IN CATCH BASIN PAY ITEM.
3. ALL EXISTING CATCH BASINS ALONG FRONTAGE ROADS THAT ARE BEING REMOVED AND REPLACED SHALL CONNECT TO EXISTING CDWM SEWER LATERALS WITH SAME PIPE MATERIAL AND SIZE AS EXISTING LATERALS, PAID FOR FOOT, AS "DRAIN CONNECTION". ALL NEW CONNECTIONS TO COMBINED SEWER SHALL BE "COMBINED SEWER, ESVCP, TYPE 2, OF THE SIZE SPECIFIED" (SEE SCHEDULE FOR SPECIFIC SIZE) PAID FOR FOOT, AS "COMBINED SEWER ESVCP, TYPE 2".
4. INVERT ELEVATION FOR ALL PROPOSED SEWER LATERALS WITH A CDWM HALF TRAP (1/2) CONNECTION.
5. ALL NECESSARY PRECUATIONS SHALL BE TAKEN BY THE CONTRACTOR TO AVOID DAMAGE TO GEOCOMPOSITE WALL DRAIN. IF ANY PART GETS DAMAGED DURING CONSTRUCTION, THEN IT SHALL BE REPLACED WITH NO ADDITIONAL COST TO THE DEPARTMENT. COST SHALL BE INCLUDED IN CATCH BASIN ITEM.

TYLIN INTERNATIONAL

REVISIONS	
NAME	DATE
REVISED	04/15/05

ILLINOIS DEPARTMENT OF TRANSPORTATION

F.A.I. 94 (DAN RYAN EXPRESSWAY)

DRAINAGE DETAILS
SHEET 1 OF 3

SCALE: NONE DRAWN BY: MB

DATE: MARCH 18, 2005 CHECKED BY: DA