F.A.I. RTE.	SECTION	COUNTY	TOTAL SHEETS	SHEET NO.
94	•	COOK	860	422
STA. 2200+00.00		TO STA. 2362+00.00		
FED. ROAD DIST. NO.	ILLINOIS	FED. AID PROJECT		

• (1516.1, 1717 & 1818) R-8

62694

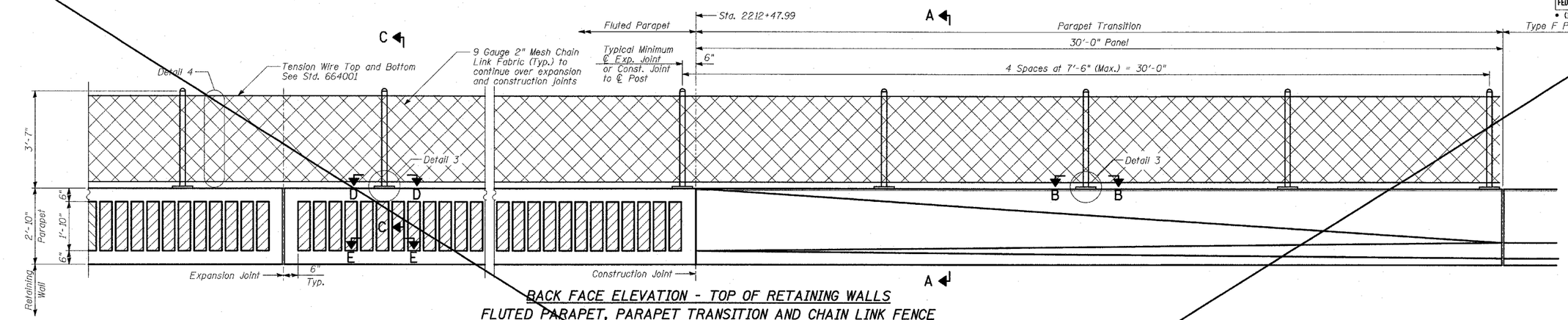

BACK FACE ELEVATION - TOP OF RETAINING WALLS FLUTED PARAPET, PARAPET TRANSITION AND CHAIN LINK FENCE

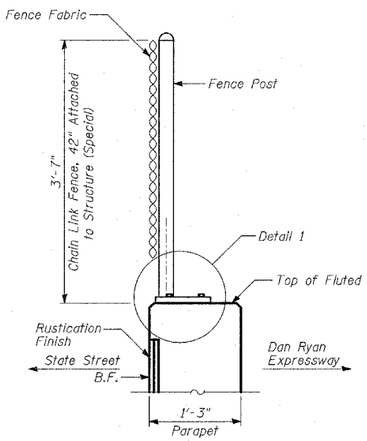

SECTION C-C

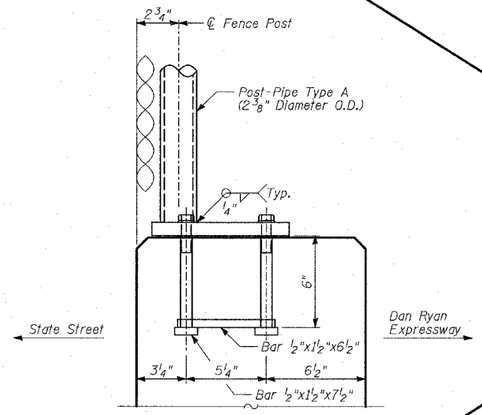

DETAIL 1

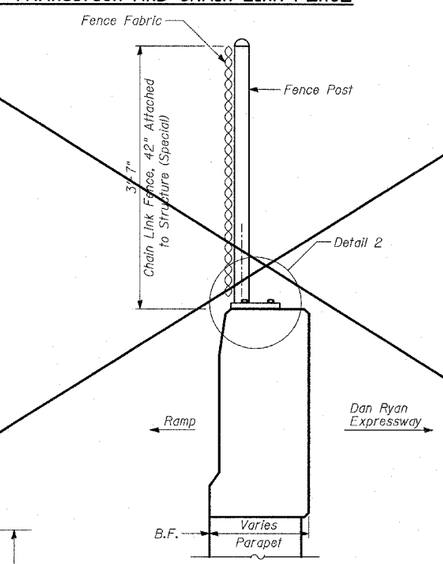

SECTION A-A

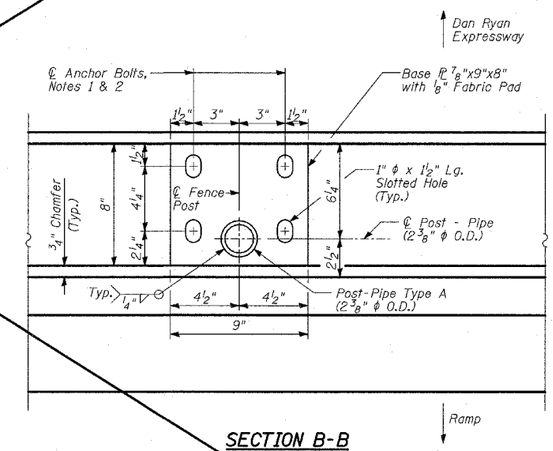

SECTION B-B
BASE PLATE PLAN

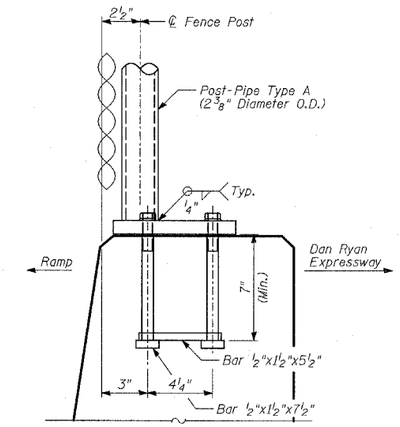

DETAIL 2

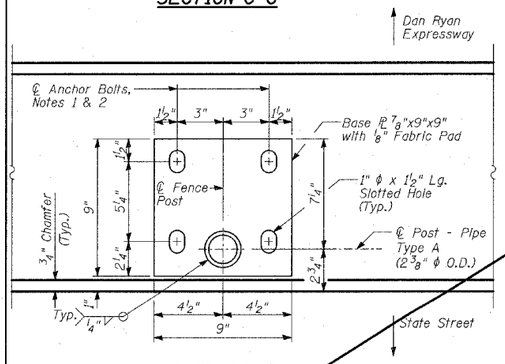

SECTION D-D
BASE PLATE PLAN

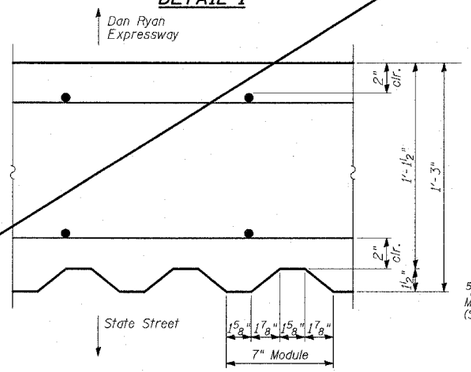

SECTION E-E

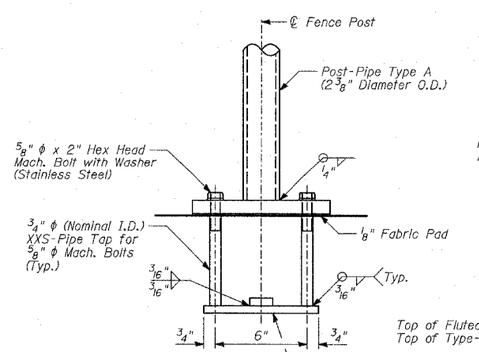

DETAIL 3

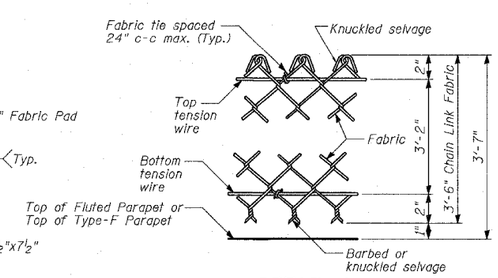

DETAIL 4

ITEM	UNIT	TOTAL
Chain Link Fence, 42" Attached to Structure (Special)	FOOT	592

SHEET 11 OF 20

NOTES:

1. In lieu of the cast-in-place anchor bolt assembly shown, the Contractor has the option of drilling and epoxy grouting 5/8" diameter anchor rods with 1 1/4" diameter washers. The Contractor shall use the capsule or the adhesive cartridge type anchor rods that have been previously tested and given prior approval by the Department. The Contractor shall install these anchor rods in pre-drilled holes according to the manufacturer's recommendations and procedures. The capsule or adhesive cartridge shall be sealed with pre-measured amounts of adhesive chemical. Anchor rod threading to be peened after nuts are installed.
2. For additional chain link details, see Standard 664001.

TY·LIN INTERNATIONAL

REVISIONS	
NAME	DATE
REVISED	04/15/05

ILLINOIS DEPARTMENT OF TRANSPORTATION

F.A.I. 94 (DAN RYAN EXPRESSWAY)
RETAINING WALL ALONG STATE ST.
ENTRANCE RAMP AT 95TH ST.
WALL 1 - CHAIN LINK FENCE, 42"
ATTACHED TO STRUCTURE (SPECIAL)

S.N. 016-W943 DESIGNED BY: MI, MAF
SCALE: N.T.S. DRAWN BY: MAF, TB
DATE: MARCH 18, 2005 CHECKED BY: TD, MI

$FILE$
$DATE$