F.A.I. RTE.	SECTION	COUNTY	TOTAL SHEETS	SHEET NO.
94	•	COOK	860	467
STA. 2200+00.00	TO STA. 2362+00.00			
FED. ROAD DIST. NO.	ILLINOIS	FED. AID PROJECT		

• (1516.1, 1717 & 1818) R-8

62694

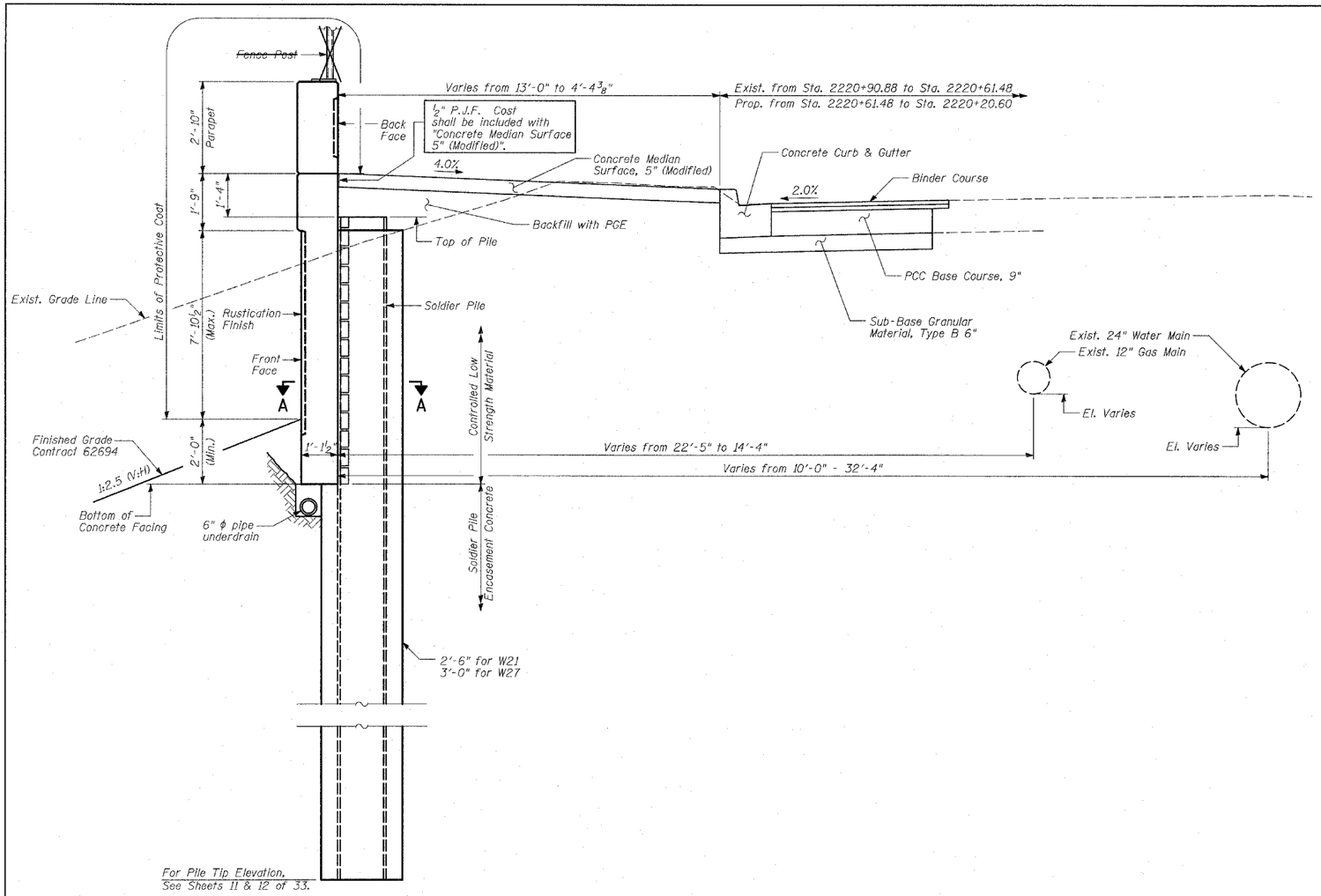

For Pile Tip Elevation, See Sheets 11 & 12 of 33.

CROSS SECTION THRU WALL

(Sta. 2220+90.88 to Sta. 2220+20.60)

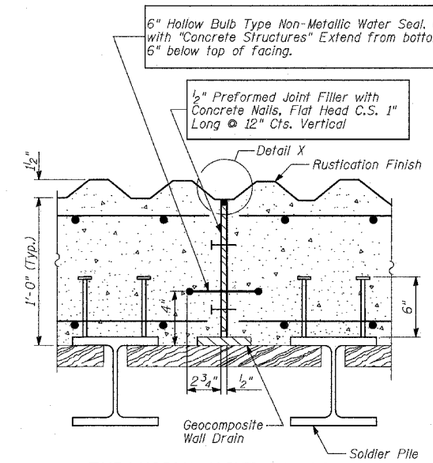

EXPANSION JOINT DETAILS

(Joint in Valley)

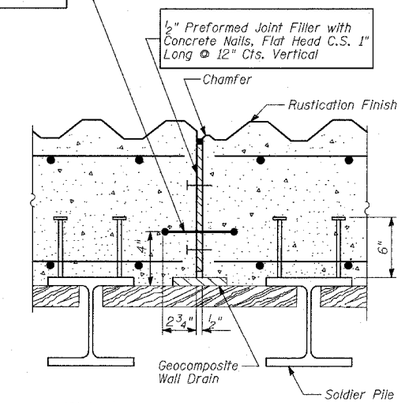

EXPANSION JOINT DETAILS

(Joint on Diagonal)

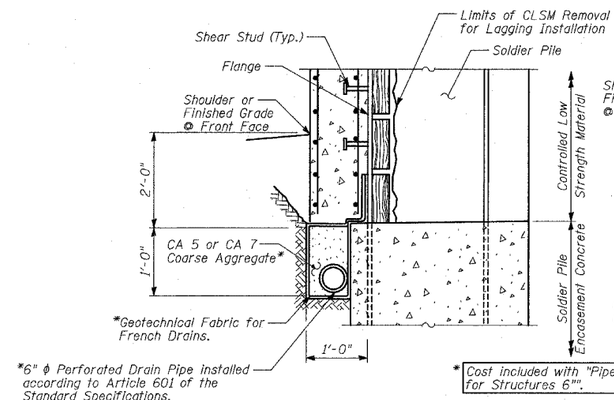

PIPE UNDERDRAIN DETAIL AT SOLDIER PILE

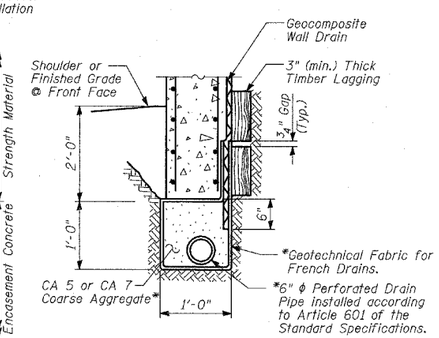

PIPE UNDERDRAIN DETAIL BETWEEN SOLDIER PILES

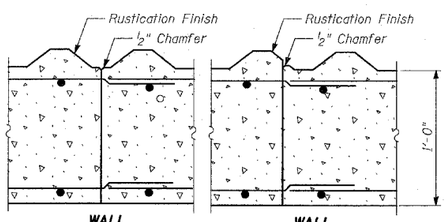

WALL (Joint in Valley) **WALL** (Joint on Diagonal)

CONSTRUCTION JOINT DETAILS

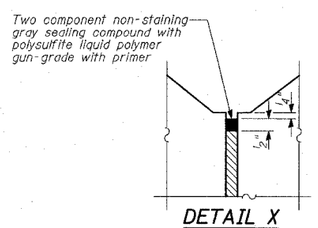

DETAIL X

BILL OF MATERIAL

ITEM	UNIT	TOTAL
Porous Granular Embankment	CU YD	1,332
Structure Excavation	CU YD	648
Stud Shear Connectors	EACH	3,180
Untreated Timber Lagging	SQ FT	11,160
Geocomposite Wall Drain	SQ YD	1,308
Pipe Underdrains for Structures, 6"	FOOT	1,229

TY·LIN INTERNATIONAL

SHEET 18 OF 33

REVISIONS	
NAME	DATE
REVISED	04/15/05

ILLINOIS DEPARTMENT OF TRANSPORTATION

F.A.I. 94 (DAN RYAN EXPRESSWAY)
RETAINING WALL ALONG STATE ST.
93RD ST. TO 91ST ST.
WALL 2B

WALL CROSS SECTIONS & DETAILS (2 OF 2)

S.N. 016-W961 DESIGNED BY: MI, DJR
SCALE: N.T.S. DRAWN BY: DJR, MAF
DATE: MARCH 18, 2005 CHECKED BY: TD, MI