F.A.I. RTE.	SECTION	COUNTY	TOTAL SHEETS	SHEET NO.
94	•	COOK	860	583
STA. 2200+00.00	TO STA. 2362+00.00			
FED. ROAD DIST. NO.	ILLINOIS	FED. AID PROJECT		

• (1516.1, 1717 & 1818) R-8

62694

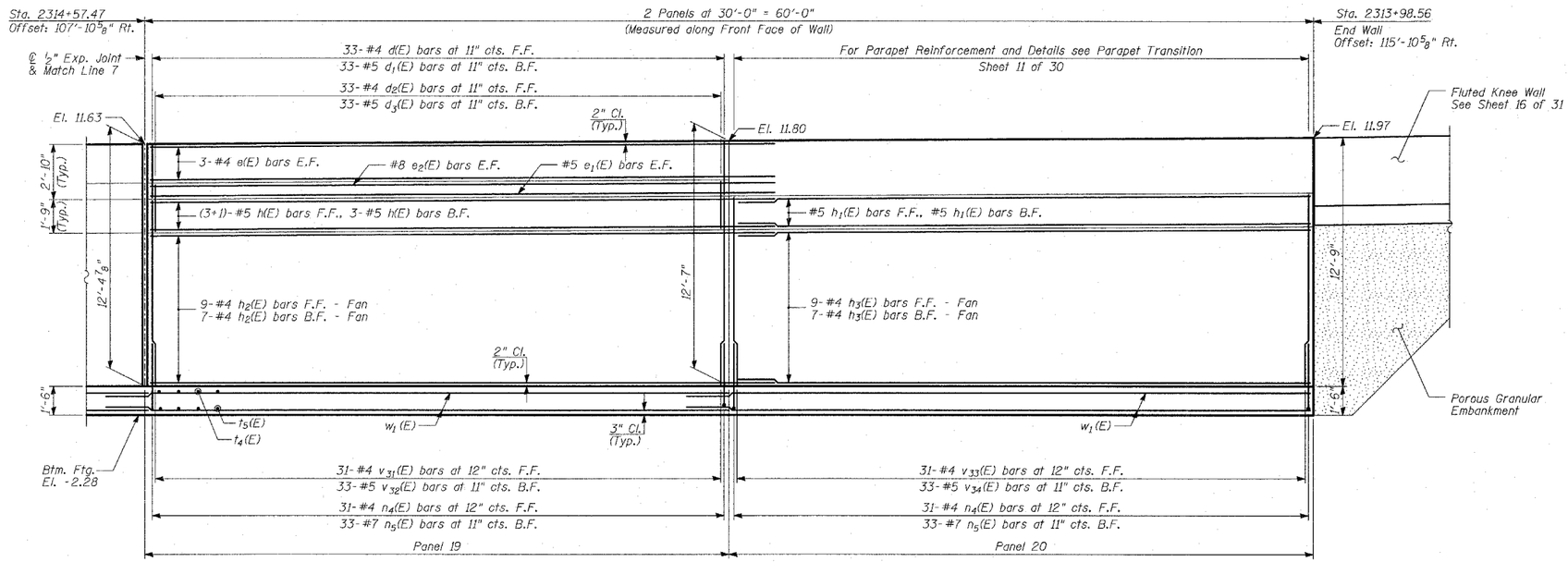

ELEVATION

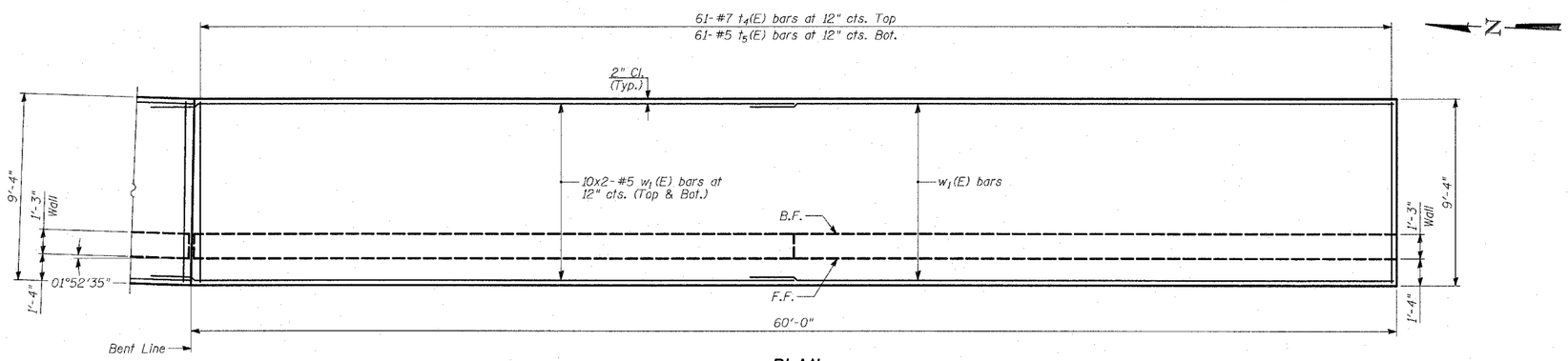

PLAN

NOTES:

1. Work this Sheet with Sheets 11 thru 13, 16, and 19 thru 21 of 31.
2. For Lap Splices, see Sheet 13 of 31.
3. Bars indicated thus 10x2-#5 etc. indicates 10 lines of bars with 2 lengths per line.
4. B.F. - denotes Back Face.
5. E.F. - denotes Each Face.
6. F.F. - denotes Front Face.

TY·LIN INTERNATIONAL

REVISIONS	
NAME	DATE
REVISED	05/06/05
REVISED	04/15/05

ILLINOIS DEPARTMENT OF TRANSPORTATION

F.A.I. 94 (DAN RYAN EXPRESSWAY)
RETAINING WALL ALONG STATE ST.
ENTRANCE RAMP AT 79TH ST.
WALL 69 - PLAN AND ELEVATION
STA. 2314+57.47 TO STA. 2313+98.56

S.N. 016-W975 DESIGNED BY: MAF, SNB
SCALE: N.T.S. DRAWN BY: MAF, SNB
DATE: MARCH 18, 2005 CHECKED BY: TD, MI