F.A.I. RTE.	SECTION	COUNTY	TOTAL SHEETS	SHEET NO.
94	•	COOK	860	584
STA. 2200+00.00		TO STA. 2362+00.00		
FED. ROAD DIST. NO.	ILLINOIS	FED. AID PROJECT		

• (1516.1, 1717 & 1818) R-8

62694

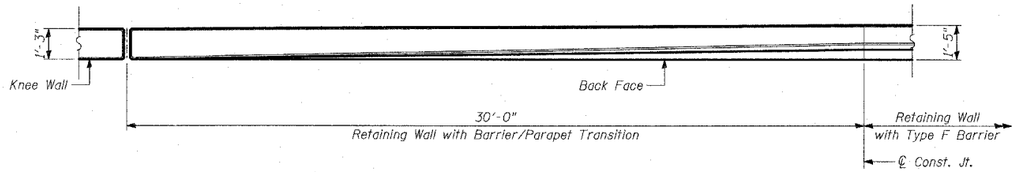

PLAN

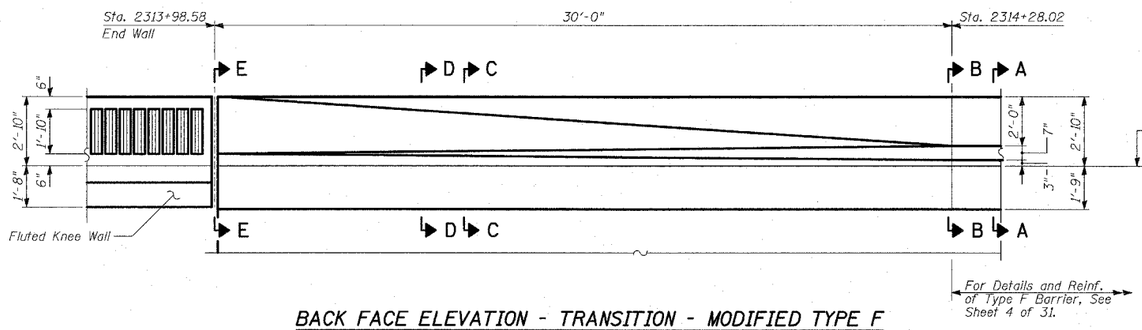

BACK FACE ELEVATION - TRANSITION - MODIFIED TYPE F BARRIER TO FLUTED PARAPET - CONCRETE DIMENSIONS

(From Sta. 2313+98.58 to Sta. 2314+28.02)

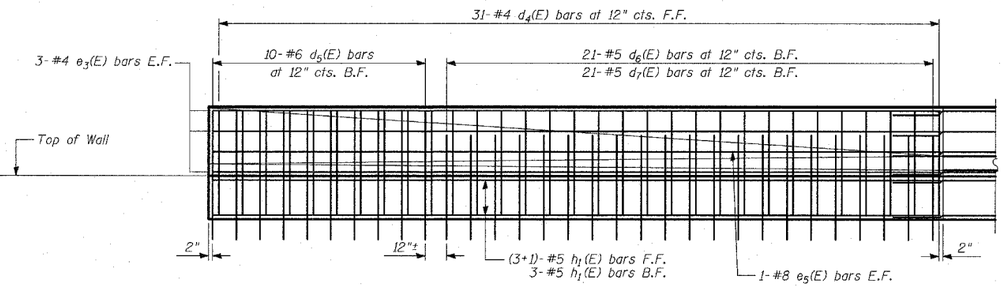

BACK FACE ELEVATION - TRANSITION - MODIFIED TYPE F BARRIER TO FLUTED PARAPET - REINFORCEMENT

(From Sta. 2313+98.58 to Sta. 2314+28.02)

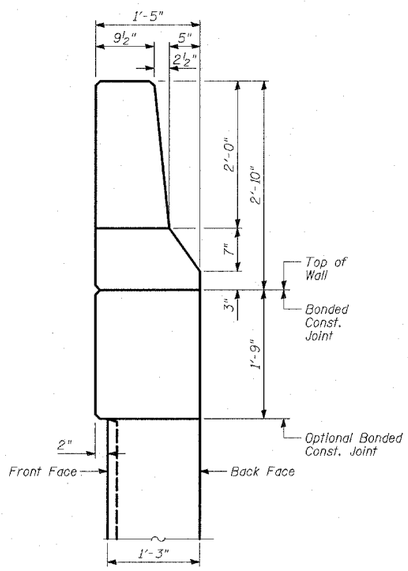

SECTION A-A

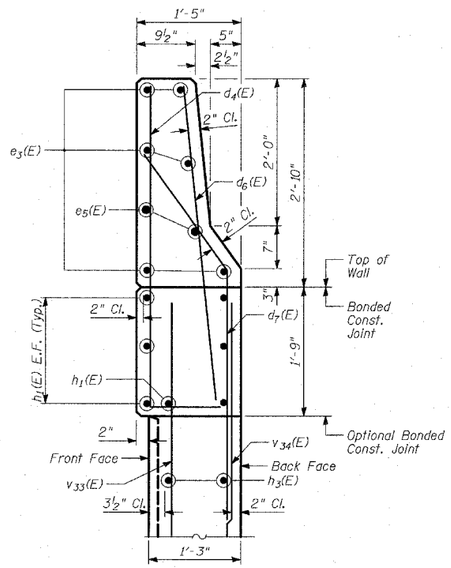

SECTION B-B

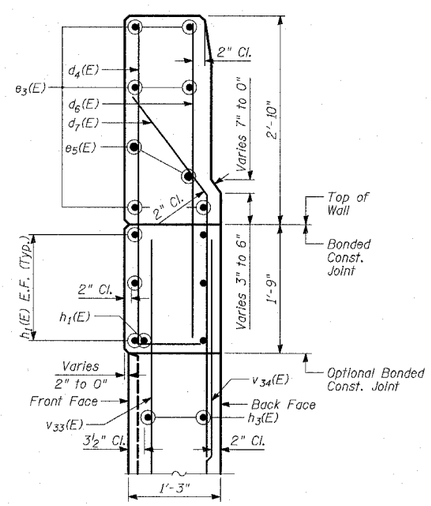

SECTION C-C

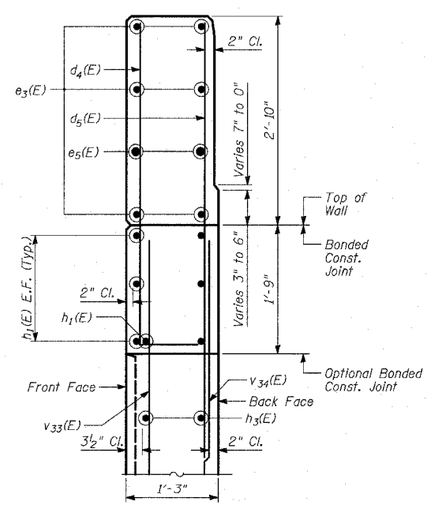

SECTION D-D

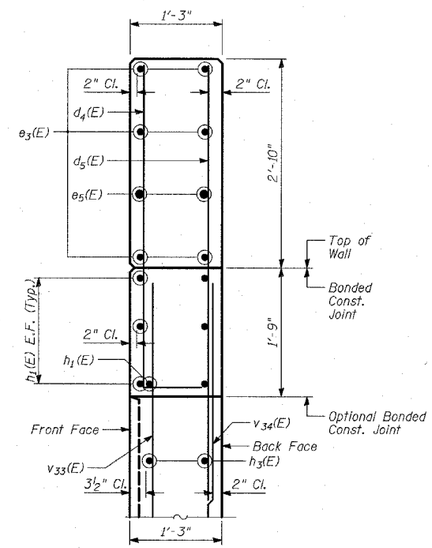

SECTION E-E

SHEET 11 OF 31

NOTES:

1. B.F. - denotes Back Face.
2. E.F. - denotes Each Face.
3. F.F. - denotes Front Face.
4. Work this Sheet with Sheets 12 thru 25 of 31.
5. For Lap Splices, see Sheet 13 of 31.

TYLIN INTERNATIONAL

REVISIONS	
NAME	DATE
REVISED	05/06/05

ILLINOIS DEPARTMENT OF TRANSPORTATION

F.A.I. 94 (DAN RYAN EXPRESSWAY)
RETAINING WALL ALONG STATE ST.
ENTRANCE RAMP AT 79TH ST.
WALL 69
PARAPET TRANSITION

S.N. 016-W975 — DESIGNED BY: MAF, SNB
SCALE: N.T.S. — DRAWN BY: MAF, SNB
DATE: MARCH 18, 2005 — CHECKED BY: TD, MI