| F.A.I. RTE. | SECTION | COUNTY | TOTAL SHEETS | SHEET NO. |
|---|---|---|---|---|
| 94 | • | COOK | 860 | 651 |
| STA. 2200+00.00 | TO STA. 2362+00.00 | | | |
| FED. ROAD DIST. NO. | ILLINOIS | FED. AID PROJECT | | |

• (1516.1, 1717 & 1818) R-8

62694

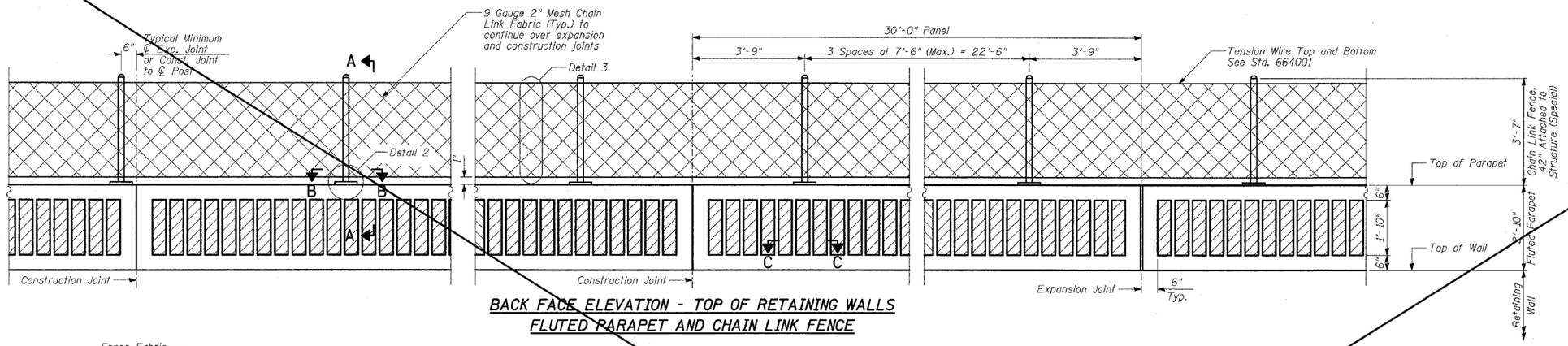


## BACK FACE ELEVATION - TOP OF RETAINING WALLS FLUTED PARAPET AND CHAIN LINK FENCE

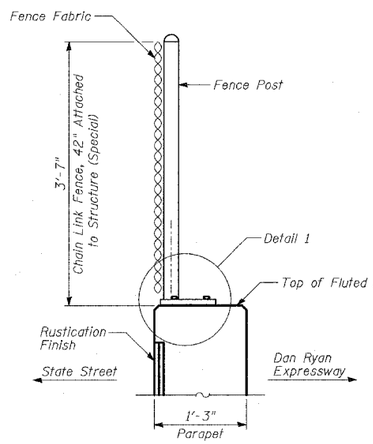


## SECTION A-A

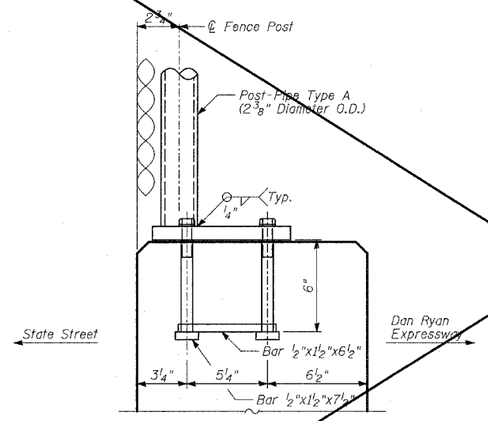


## DETAIL 1

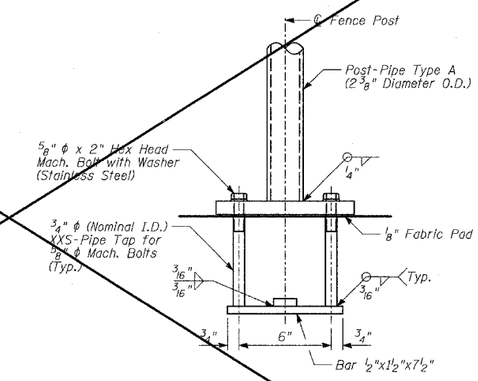


## DETAIL 2

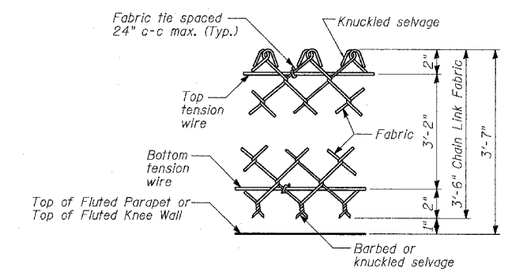


## DETAIL 3

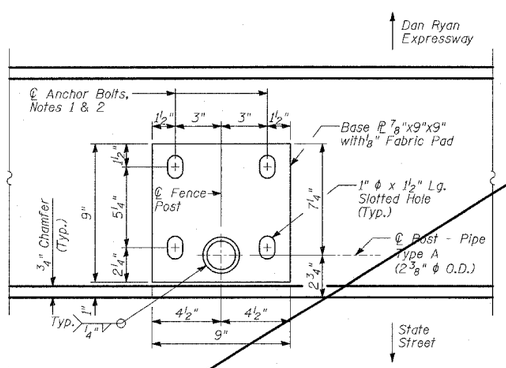


## SECTION B-B
## BASE PLATE PLAN

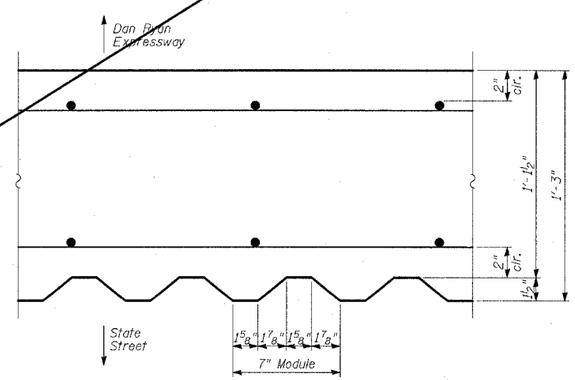


## SECTION C-C

## BILL OF MATERIAL

| ITEM | UNIT | TOTAL |
|---|---|---|
| Chain Link Fence, 42" Attached to Structure (Special) | FOOT | 420 |

## NOTES:

1. In lieu of the cast-in-place anchor bolt assembly shown, the Contractor has the option of drilling and epoxy grouting 3/8" diameter anchor rods with 1 1/4" diameter washers. The Contractor shall use the capsule or the adhesive cartridge type anchor rods that have been previously tested and given prior approval by the Department. The Contractor shall install these anchor rods in pre-drilled holes according to the manufacturer's recommendations and procedures. The capsule or adhesive cartridge shall be sealed with pre-measured amounts of adhesive chemical. Anchor rod threading to be peened after nuts are installed.

2. For additional chain link details, see Standard 664001.

TY·LIN INTERNATIONAL

SHEET 11 OF 21

| REVISIONS | |
|---|---|
| NAME | DATE |
| | |
| | |
| | |
| | |
| | |
| | |
| | |
| | |
| | |
| REVISED | 04/15/05 |

ILLINOIS DEPARTMENT OF TRANSPORTATION

F.A.I. 94 (DAN RYAN EXPRESSWAY)
RETAINING WALL ALONG STATE ST.
EXIT RAMP AT AIS #2
AIS 2 - CHAIN LINK FENCE, 42" ATTACHED TO STRUCTURE (SPECIAL)

S.N. 016-W960 — DESIGNED BY: MI, DJR
SCALE: N.T.S. — DRAWN BY: DJR, MAF
DATE: MARCH 18, 2005 — CHECKED BY: TD, MI

ATLUCA