F.A.I. RTE.	SECTION	COUNTY	TOTAL SHEETS	SHEET NO.
94	*	COOK	860	664
STA. 2200+00.00		TO STA. 2362+00.00		
FED. ROAD DIST. NO.	ILLINOIS	FED. AID PROJECT		

* (1516.1, 1717 & 1818) R-8

62694

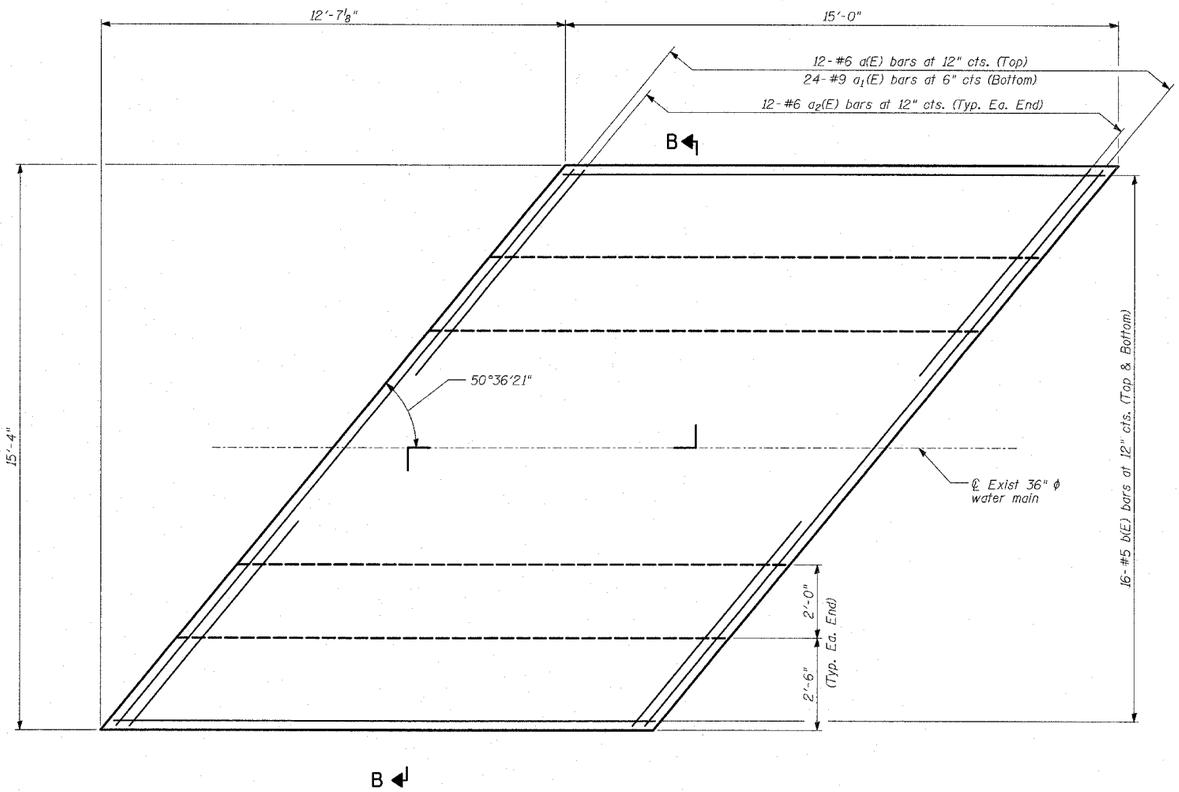

PLAN

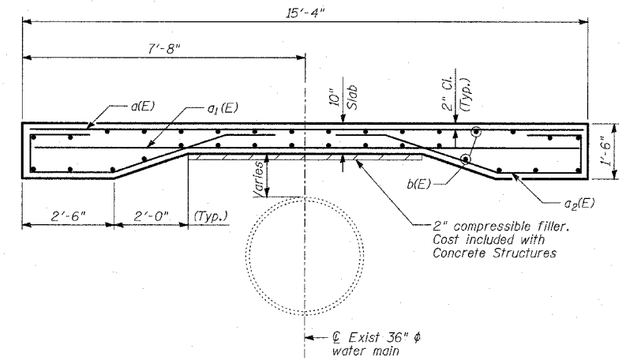

SECTION B-B

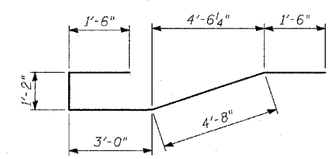

BAR a_2 (E)

BILL OF MATERIAL

Bar	No.	Size	Length	Shape
a(E)	12	#6	19'-6"	
a_1(E)	24	#9	19'-6"	
a_2(E)	24	#6	11'-10"	
b(E)	32	#5	14'-8"	
Reinforcement Bars, Epoxy Coated			POUND	2,860
Concrete Structures			CU YD	10

Reinforcement bars designated (E) shall be epoxy coated.

SHEET 2 OF 2

REVISIONS	
NAME	DATE
REVISED	05/06/05

ILLINOIS DEPARTMENT OF TRANSPORTATION

F.A.I. 94 (DAN RYAN EXPRESSWAY)

PROTECTION SLAB DETAILS FOR EXISTING 36" WATER MAIN AT MICHIGAN AVE. RAMP

S.N.
SCALE:
DATE: MARCH 18, 2005

DESIGNED BY: TD
DRAWN BY: DR,SP
CHECKED BY: TD,MI

TYLIN INTERNATIONAL