F.A.I. RTE.	SECTION	COUNTY	TOTAL SHEETS	SHEET NO.
94	*	COOK	860	665
STA. 2200+00.00		TO STA. 2362+00.00		
FED. ROAD DIST. NO.	ILLINOIS	FED. AID PROJECT		

* (1516.1, 1717 & 1818) R-8

62694

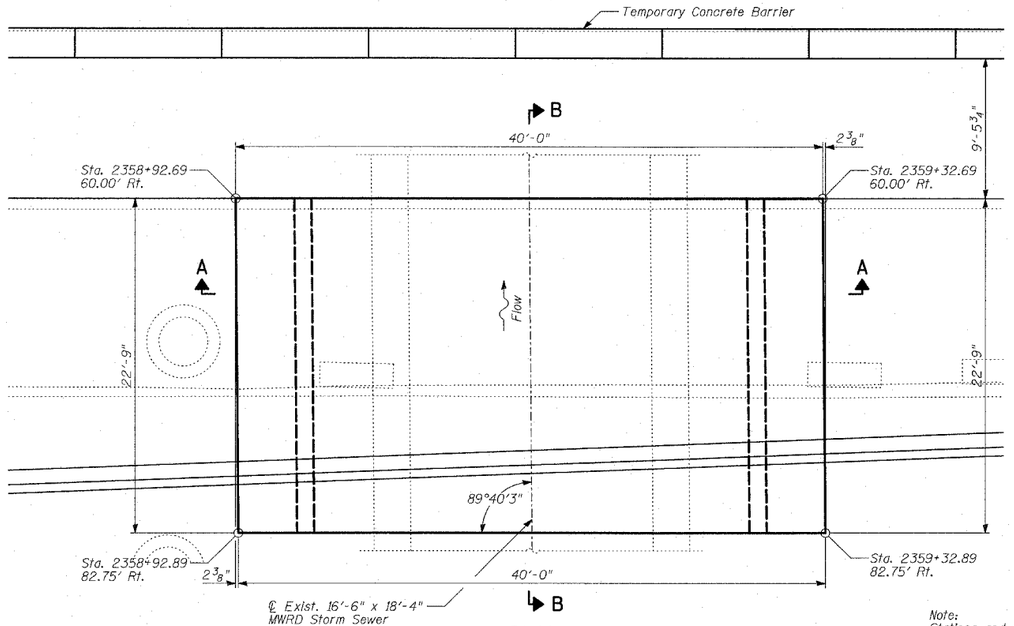

PLAN

Note:
Stations and offsets are relative to ℄ NB I-94

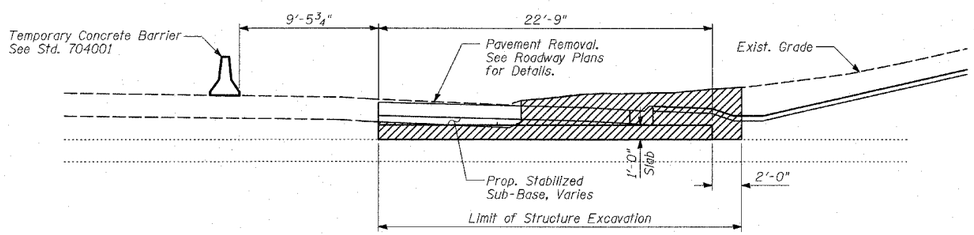

LIMITS OF STRUCTURAL EXCAVATION

LEGEND

Structure Excavation

NOTES:

1. Reinforcement bars shall conform to the requirements of AASHTO M31 or M322 Grade 60.
2. Plan dimensions and details relative to existing structure have been taken from existing plans and are subject to nominal construction variations. It shall be the Contractor's responsibility to verify such dimensions and details in the field and make necessary approved adjustments prior to construction or ordering of materials. Such variations shall not be cause for additional compensation for a change in the scope of the work; however, the Contractor will be paid for the quantity actually finished at the unit price bid for the work.
3. All exposed concrete edges shall be chamfered $^3/_4$" except as noted.
4. All elevations shown are based on the Chicago City Datum of 0.00, which is 579.19 feet above mean tide New York. (NAVD 88)
5. It is the Contractor's responsibility to locate existing utilities, especially the existing MWRD Storm Sewer. Any repairs due to damage of the storm sewer shall be the Contractor's responsibility.
6. For Earth Excavation, see Roadway Plans.

TOTAL BILL OF MATERIAL

ITEM	UNIT	TOTAL
Structure Excavation	CU YD	108
Concrete Structures	CU YD	43
Reinforcement Bars, Epoxy Coated	POUND	9,490

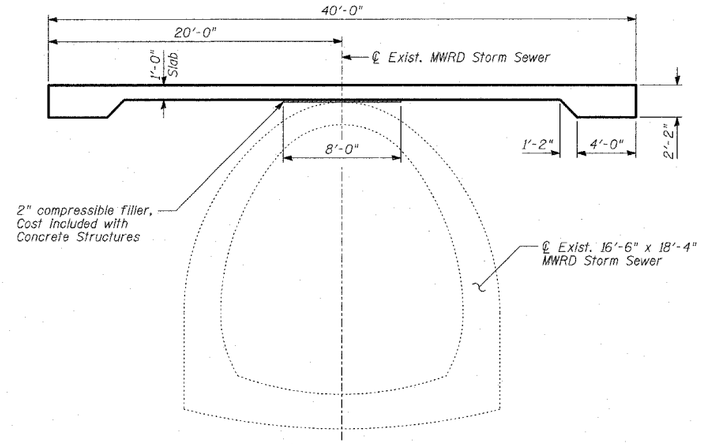

SECTION A-A

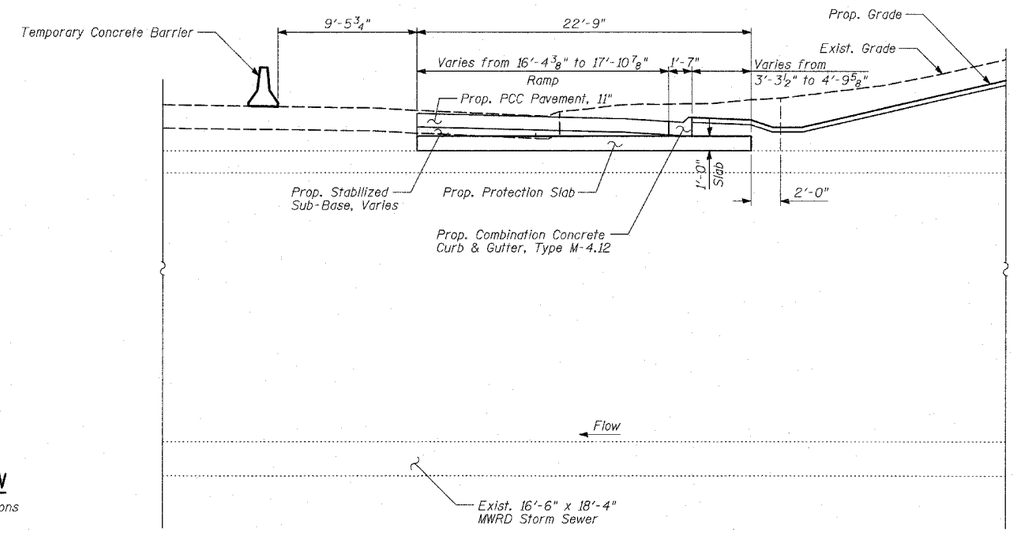

SECTION B-B

DESIGN SPECIFICATION

AASHTO 2002 Standard Specifications for Highway Bridges

DESIGN STRESSES

FIELD UNITS

f'c = 3,500 psi
fy = 60,000 psi (Reinforcement)

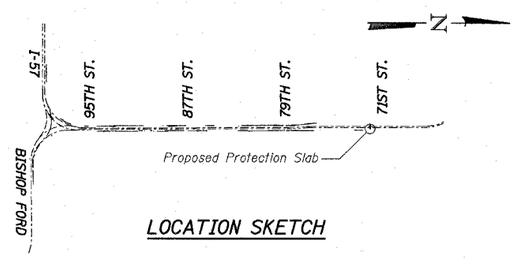

LOCATION SKETCH

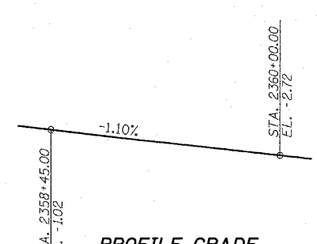

PROFILE GRADE

(N.B. I-94)

STATE OF ILLINOIS
PHILLIP D. FREY
081-004826
CHICAGO, ILLINOIS
LICENSED STRUCTURAL ENGINEER

Signed Phillip D. Frey
Phillip D. Frey, S.E. IL Lic. No. 081-004826
Expires 11-30-2006.
For drawings 1 thru 2 of 2

Date 3/18/05

SHEET 1 OF 2

REVISIONS	
NAME	DATE
REVISED	05/06/05

ILLINOIS DEPARTMENT OF TRANSPORTATION

F.A.I. 94 (DAN RYAN EXPRESSWAY)

PROTECTION SLAB FOR EXISTING
16'-6" x 18'-4" MWRD STORM SEWER
AT 72ND ST.

S.N.
SCALE:
DATE: MARCH 18, 2005

DESIGNED BY: TD, DJR
DRAWN BY: DJR
CHECKED BY: TD, MI

TY·LIN INTERNATIONAL

05/03/2005 03:06:50 PM
n:\02-31\structure\CITA\Sandlewest\Bridge\3.sandlewest.dgn