F.A.U. RTE.	SECTION	COUNTY	TOTAL SHEETS	SHEET NO.
1602	2004-021TS	COOK	25	11
STA.		TO STA.		
FED. ROAD DIST. NO.	ILLINOIS	FED. AID PROJECT		

CONTRACT NO. 62740

CONTROLLER SEQUENCE

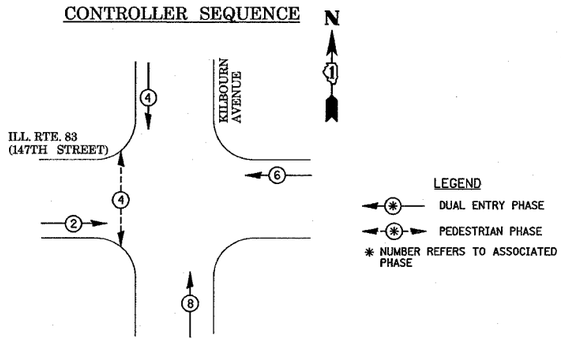

PHASE DESIGNATION DIAGRAM

DUAL ENTRY - ALL LEGS
PERMITTED LEFT TURN PHASING

EMERGENCY VEHICLE PREEMPTION SEQUENCE

FOR DUAL ENTRY OPERATION - ALL LEGS

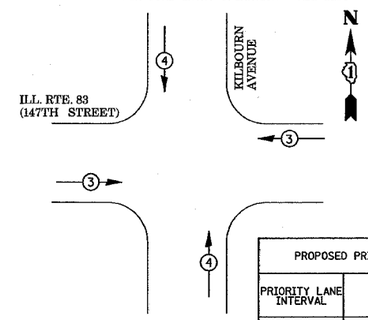

PROPOSED PRIORITY LANES		
PRIORITY LANE INTERVAL	3	4
MOVEMENT	← →	↓ ↑

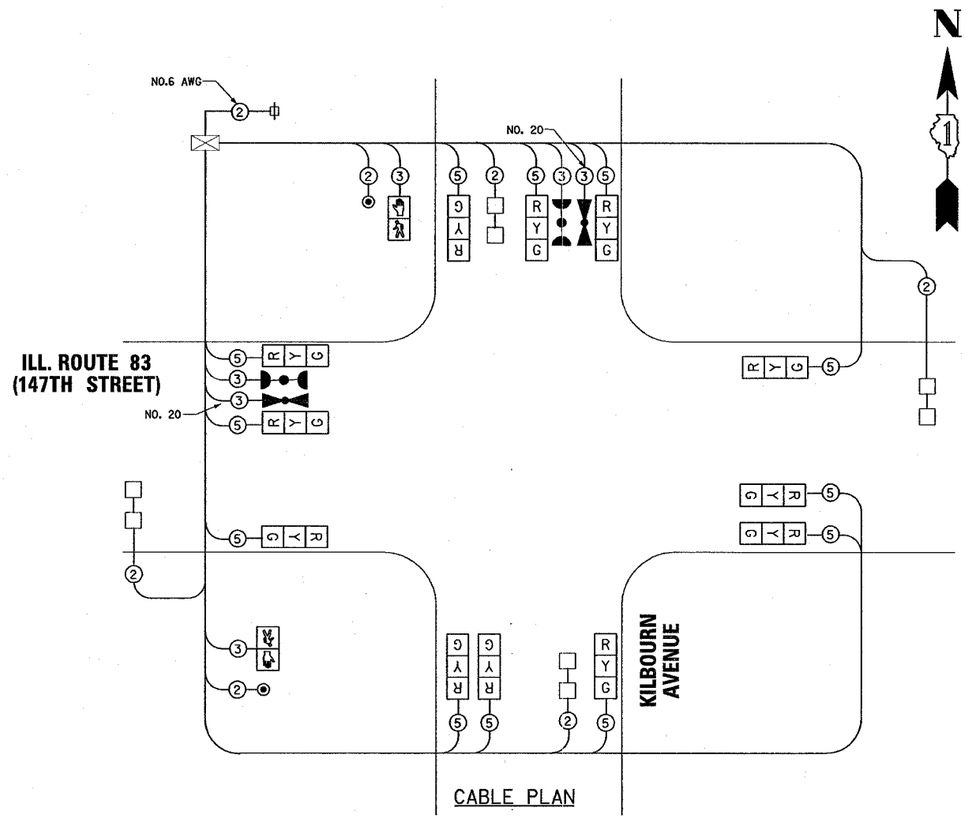

I.D.O.T. TRAFFIC SIGNAL INSTALLATION ELECTRICAL SERVICE REQUIREMENTS					TOTAL WATTAGE
TYPE	NO. LAMPS X	WATTAGE INCAND.	WATTAGE LED	X % OPERATION	
SIGNAL (RED)	12	135	17	0.50	810.0
(YELLOW)	12	135	25	0.25	405.0
(GREEN)	12	135	15	0.25	405.0
ARROW	-	135	12	0.10	-
PED. SIGNAL	2	90	25	1.00	180.0
CONTROLLER	1	100	100	1.00	100.0
ILLUM. SIGN	-	84		0.05	-
FLASHER	-	-	-	0.50	-
				TOTAL =	1900.0

ENERGY COSTS - BILLED TO: VILLAGE OF MIDLOTHIAN
(ADDRESS) 14801 S. PULASKI ROAD
MIDLOTHIAN, IL 60445

ENERGY SUPPLY - CONTACT: LARRY WOODLE
PHONE: (708) 235-2327
COMPANY: COMMONWEALTH EDISON

TEMPORARY CABLE DIAGRAM LEGEND

- R — TEMPORARY TRAFFIC SIGNAL SECTION OR PEDESTRIAN SIGNAL SECTION 12" (300 mm)
- TEMPORARY CONTROLLER CABINET
- TEMPORARY SERVICE INSTALLATION
- (5) — INDICATES NUMBER OF CONDUCTORS IN CABLE. ALL CONDUCTORS TO BE NUMBER 14 AWG WIRE UNLESS OTHERWISE NOTED.
- EMERGENCY VEHICLE LIGHT DETECTOR
- CONFIRMATION BEACON
- PEDESTRIAN PUSHBUTTON DETECTOR
- VEHICLE DETECTOR, INDUCTION LOOP
- 12" (300mm) PEDESTRIAN SIGNAL SECTION
- MICROWAVE VEHICLE SENSOR
- R Y G "L" — TEMPORARY TRAFFIC SIGNAL FACE ("L" INDICATES LOUVERED HOOD)

REVISIONS	
NAME	DATE

ILLINOIS DEPARTMENT OF TRANSPORTATION

TEMPORARY CABLE PLAN, TEMPORARY PHASE DESIGNATION DIAGRAM AND TEMPORARY EMERGENCY VEHICLE PREEMPTION SEQUENCE

ILL. ROUTE 83 (147TH STREET) AT
KILBOURN AVENUE
MIDLOTHIAN, ILLINOIS

SCALE: N.T.S.
DATE 09-20-2004

DRAWN BY CWC
DESIGNED BY VO
CHECKED BY TJM