CONTRACT NO. 64178

F.A.P. RTE.	SECTION	COUNTY	TOTAL SHEETS	SHEET NO.
549	116RS-1	OGLE	593	242
STA.		TO STA.		
FED. ROAD DIST. NO.	ILLINOIS	FED. AID PROJECT		

INLET SPECIAL NO. 3, 4, 5, 6 REINFORCEMENT DETAIL

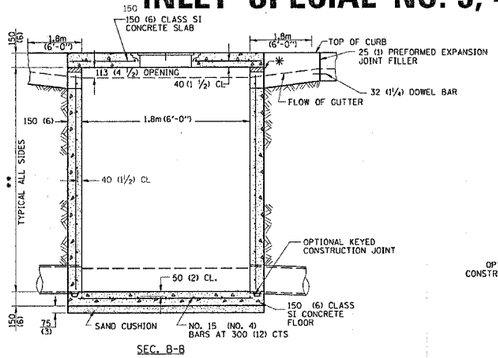

SEC. B-B

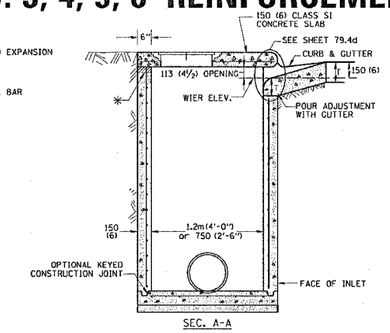

SEC. A-A

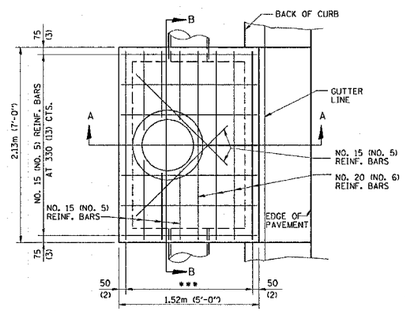

TOP VIEW

* THE WALL ADJUSTMENTS SHALL BE MADE WITH CONCRETE BUILDING BRICK OR CLASS SI CONCRETE.

THE HEIGHT OF THE BOX MAY BE CONSTRUCTED 150 (6) SHORT TO ALLOW FOR FIELD ADJUSTMENTS.

** 1.2m (4'-0") TO 2.4m (8'-0") -
NO. 15 (NO. 5) REINF. BARS AT 300 (12) CTS. E.W.
2.4m (8'-0") TO 4.0m (13'-0") -
NO. 15 (NO. 5) REINF. BARS AT 250 (10) CTS. E.W.
4.0m (13'-0") TO 4.6m (15'-0") -
NO. 15 (NO. 5) REINF. BARS AT 200 (8) CTS. E.W.

*** 7 SPA. AT 200 mm (8") INLET SPECIAL # 3,4
5 SPA AT 208 mm (7 5/8") INLET SPECIAL # 5, 6

NOTES

ALL DIMENSIONS ARE IN MILLIMETERS (INCHES) UNLESS OTHERWISE NOTED.

TOP SLAB REINFORCEMENT TO BE EPOXY COATED BARS.

79.4e

TYPICAL HYDRANT INSTALLATION

ALL DIMENSIONS ARE IN MILLIMETERS (INCHES) UNLESS OTHERWISE NOTED.

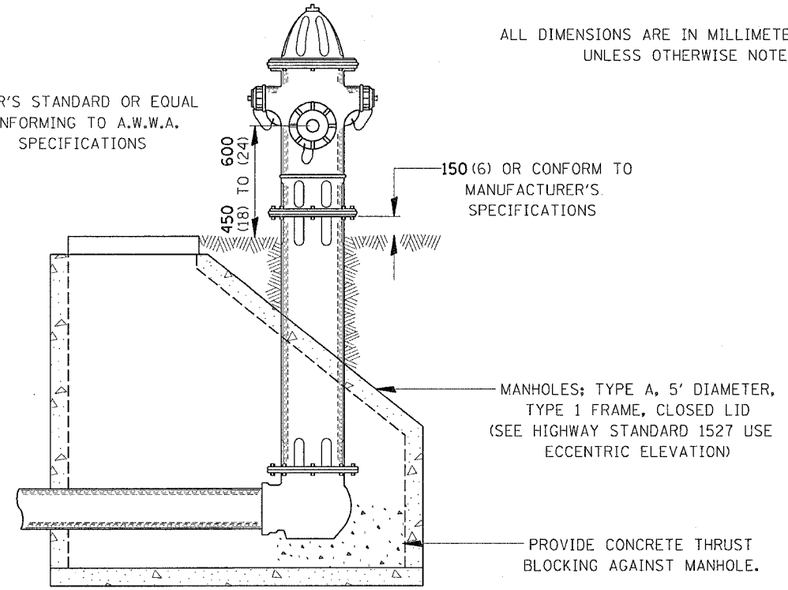

REVISED 1-8-96 81.4

DRAIN FOR AGGREGATE BASES IN URBAN AREAS

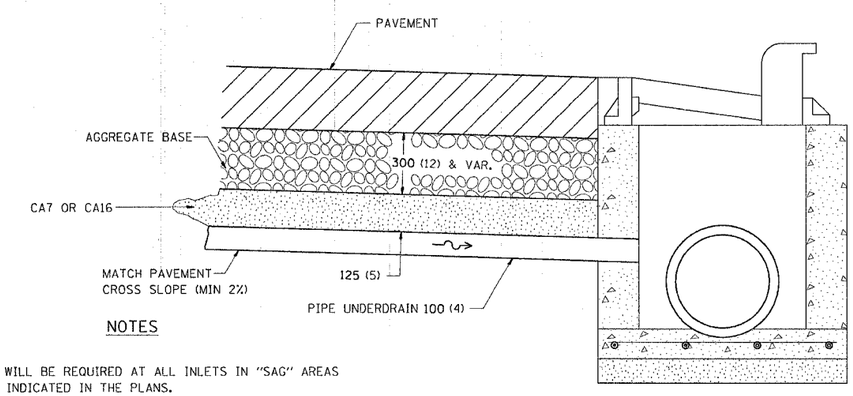

NOTES

DRAINS WILL BE REQUIRED AT ALL INLETS IN "SAG" AREAS AND AS INDICATED IN THE PLANS.

THIS WORK SHALL BE COMPLETED ACCORDING TO SECTION 601 OF THE STANDARD SPECIFICATIONS.

THIS WORK WILL BE PAID FOR AT THE CONTRACT UNIT PRICE PER METER (FOOT) FOR PIPE UNDERDRAINS OF THE DIAMETER SPECIFIED WHICH PRICE SHALL INCLUDE THE CA7 OR CA16 AND THE CONNECTION TO THE INLET.

ALL DIMENSIONS ARE IN MILLIMETERS (INCHES) UNLESS OTHERWISE NOTED.

REVISED 4-7-99 88.4

DRAIN FOR AGGREGATE BASE COURSE

NOTE: ALL DIMENSIONS ARE IN MILLIMETERS (INCHES) UNLESS OTHERWISE NOTED.

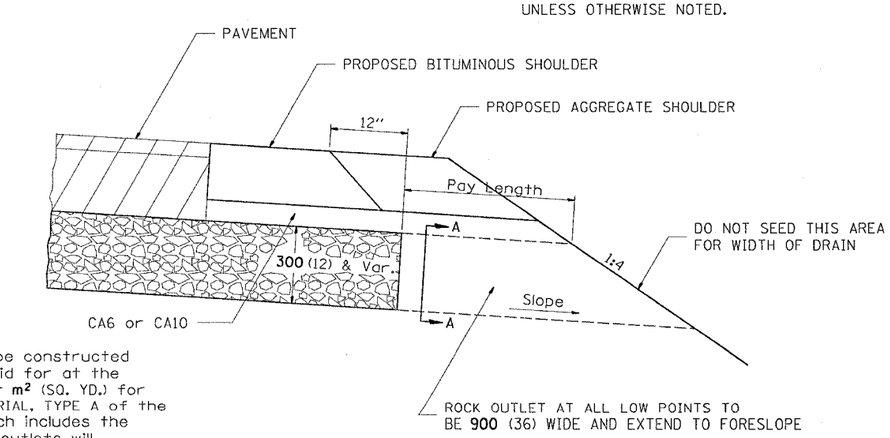

NOTES:

The rock outlets shall be constructed using CA7 and will be paid for at the contract unit price per **m²** (SQ. YD.) for SUB-BASE GRANULAR MATERIAL, TYPE A of the thickness specified which includes the filter fabric. The Rock outlets will be measured in **m²** (SQ. YD.), the width being **900** (36) by the length shown above. The cost of the CA6 or CA10 under the shoulder shall be included in the contract unit price per **m²** (SQ. YD.) for SUB-BASE GRANULAR MATERIAL, TYPE A of the thickness specified. The filter fabric to be used shall conform to the filter fabric used for Riprap.

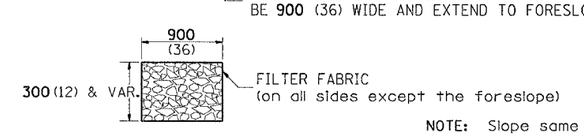

SECTION A-A

NOTE: Slope same as shoulder with 2% min.

REVISED 13-JULY-95 96.4