CONTRACT NO. 64178

F.A.P. RTE.	SECTION	COUNTY	TOTAL SHEETS	SHEET NO.
549	116RS-1	OGLE	593	258
STA.		TO STA.		
FED. ROAD DIST. NO.	ILLINOIS	FED. AID PROJECT		

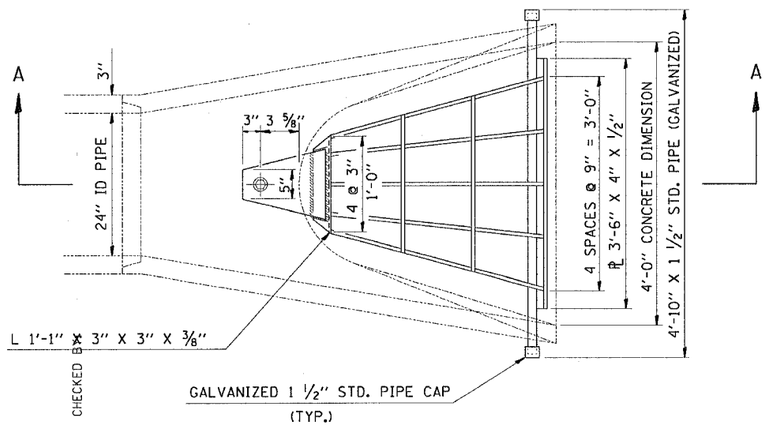

PLAN

APPROX. WEIGHT OF STEEL = 140 LBS.

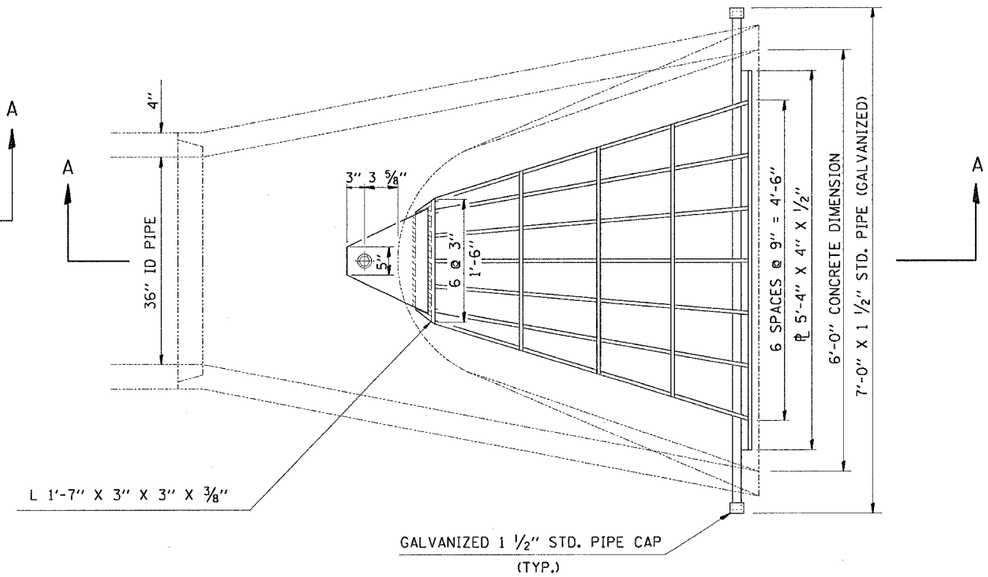

PLAN

APPROX. WEIGHT OF STEEL = 270 LBS.

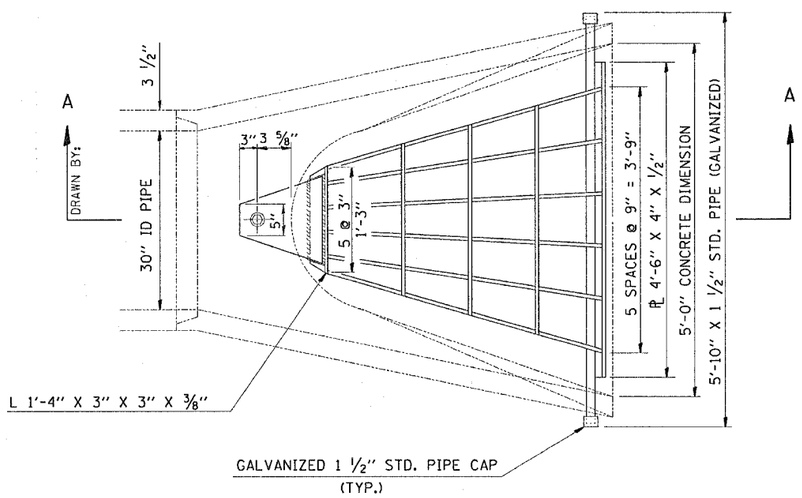

PLAN

APPROX. WEIGHT OF STEEL = 210 LBS.

GENERAL NOTES

GRATING DETAILS SHOWN ARE INTENDED FOR USE WITH PARTICULAR SIZES OF PRECAST REINFORCED CONCRETE FLARED END SECTIONS AS SHOWN ON STANDARD 542601.

STRUCTURAL STEEL SHAPES AND PLATES SHALL BE IN ACCORDANCE WITH ARTICLE 1006.04 OF THE STANDARD SPECIFICATIONS FOR ROAD AND BRIDGE CONSTRUCTION.

GALVANIZED STEEL PIPE SHALL BE IN ACCORDANCE WITH ARTICLE 542.07 (d) OF THE STANDARD SPECIFICATIONS. STEEL PIPE SHALL CONFORM TO ASTM A-53 (TYPE E OR S) GRADE B SCHEDULE 40.
BOLTS, NUTS AND WASHERS SHALL BE IN ACCORDANCE WITH ARTICLE 1006.08 OF THE STANDARD SPECIFICATIONS.

ALL FABRICATION SHALL BE COMPLETED AND READY FOR ASSEMBLY BEFORE GALVANIZING.

THE CORED HOLES IN THE PRECAST CONCRETE FLARED END SECTIONS SHALL BE TO THE DIAMETERS NOTED. IF CONE-OUT ON THE OTHER END OF THE HOLE OCCURS, THE HOLE SHALL BE FILLED WITH GROUT TO CORRECT DIAMETER OF THE HOLE.

APPROXIMATE WEIGHT OF STEEL SHOWN INCLUDES TOTAL WEIGHT OF GRATING , BOLTS, WASHERS, NUTS AND STEEL PIPE.

THE CONTRACT UNIT PRICE " EACH " FOR GRATING FOR CONCRETE FLARED END SECTION EQUIVALENT ROUND-SIZE OF THE SIZE INDICATED SHALL INCLUDE FABRICATION AND INSTALLATION OF THE GRATING AS DETAILED HEREON, INCLUDING FABRICATION OF THE NECESSARY MOUNTING HOLES IN THE FLARED END SECTION. THIS PRICE DOES NOT INCLUDE THE COST OF THE PRECAST CONCRETE FLARED END SECTION.

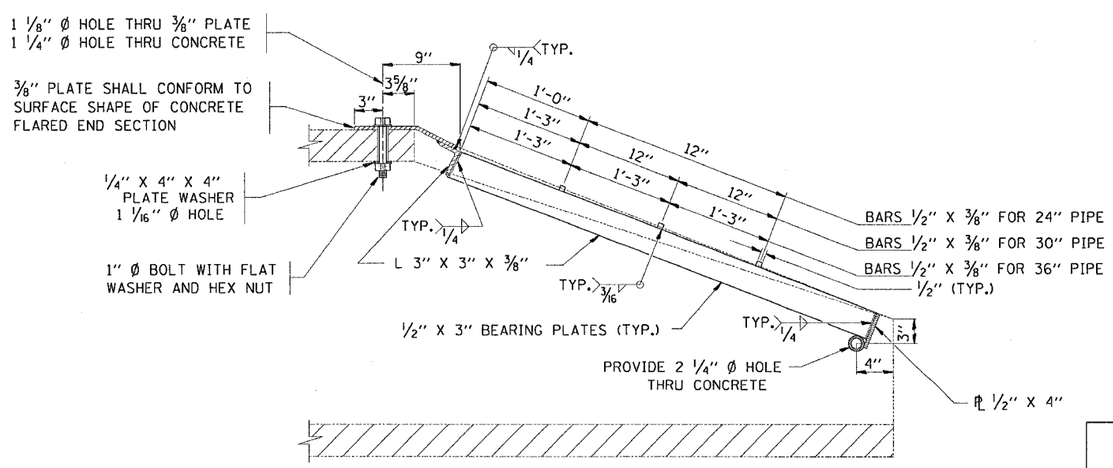

SECTION A-A

GRATING FOR HORIZONTAL ELLIPTICAL CONCRETE FLARED END SECTION (FOR 24", 30", & 36" PIPE)

STANDARD 542311 (SPECIAL)

DRAWN BY:

DESIGNED BY:

•DATE-TIME•
•DGN-SPEC•
•REF
•REF
•REF
•REF
•REF

REVISED 4/19/93