CONTRACT NO. 68334

F.A.P. RTE.	SECTION	COUNTY	TOTAL SHEETS	SHEET NO.
310	(38-2)RS	MCDONOUGH	66	15
STA.		TO STA.		
FED. ROAD DIST. NO.	ILLINOIS	FED. AID PROJECT		

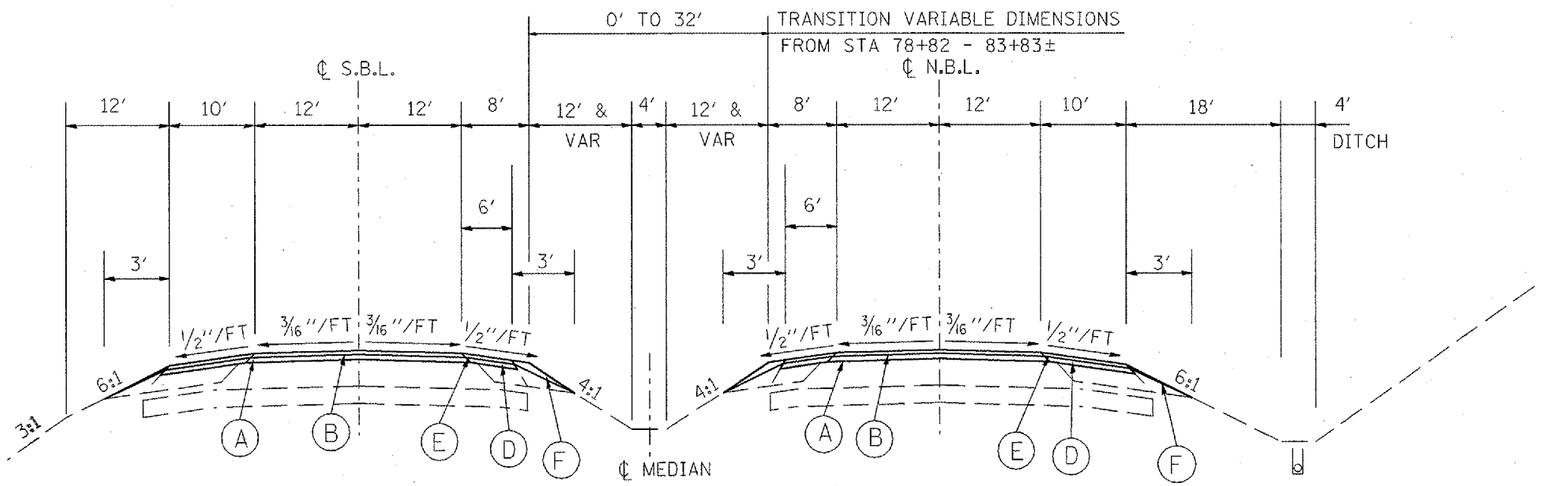

U.S. ROUTE 67

STA 78+82 - STA 88+77.88
STA 107+26.37 - STA 120+72.51
STA 125+30.42 - STA 129+77.92
STA 133+75.92 - STA 141+02.86

LEGEND

(A) POLYMERIZED BIT CONC BINDER CSE, SUPERPAVE, IL-19.0, N70, 2.5"
(B) POLYMERIZED BIT CONC SURFACE CSE, SUPERPAVE, MIX D, N70, 2"
(C) BIT CONC SURFACE CSE, SUPERPAVE, MIX D, N50, 2"
(D) BIT CONC BINDER CSE, SUPERPAVE, IL-19.0 L (LE), 2.5"
(E) BIT CONC SURFACE CSE, SUPERPAVE, IL-9.5 L (LE), MIX C, N30, 2"
(F) AGGREGATE SHOULDERS, TYPE B

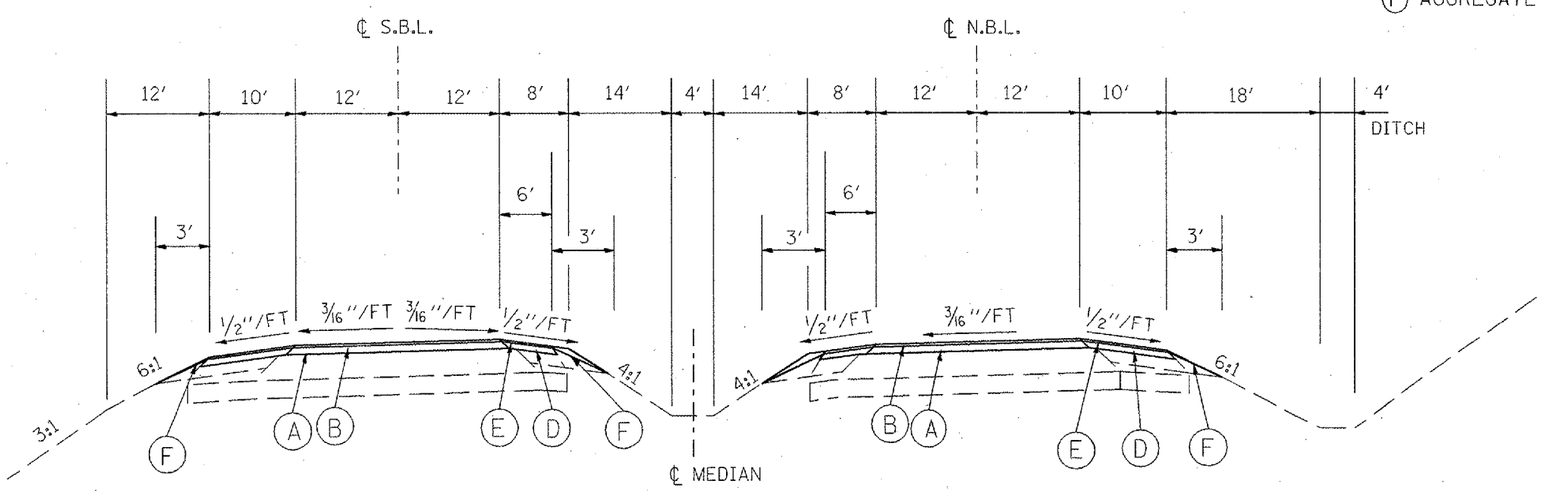

U.S. ROUTE 67

STA 88+77.88 - STA 107+26.37
STA 120+72.51 - STA 125+30.42
STA 129+77.92 - STA 133+75.92

REVISIONS NAME	DATE

ILLINOIS DEPARTMENT OF TRANSPORTATION

PROPOSED TYPICAL SECTIONS

SCALE: VERT. HORIZ. NOT TO SCALE
DATE
DRAWN BY CADD
CHECKED BY

PLOT DATE = 3/23/2005
FILE NAME = n:\proj\ents\68334\shees.dgn
PLOT SCALE = 100.0000 ' / IN.
REFERENCE = WEF