FAP ROUTE	SECTION	COUNTY	TOTAL SHEETS	SHEET NO
692	12-1BR-1	MADISON	65	55
STA.		TO STA.		
CONTRACT NO.: 76386				

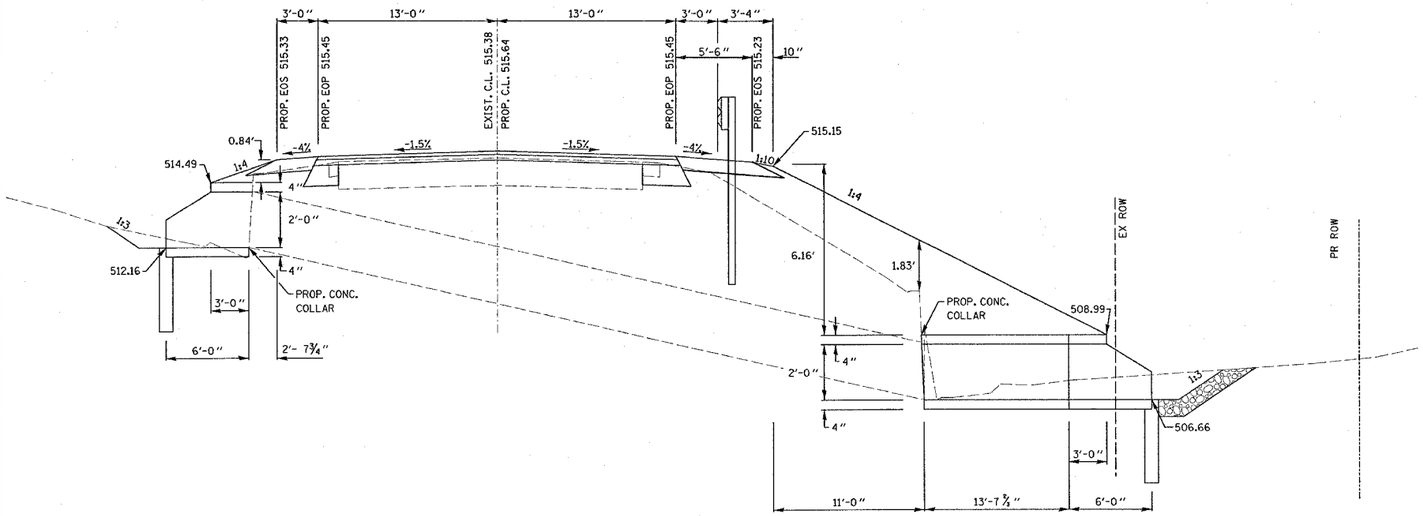

CROSS ROAD CULVERT EXTENSION DETAIL
1437+61.07 (SEE CROSS SECTIONS FOR ADDITIONAL INFO.)

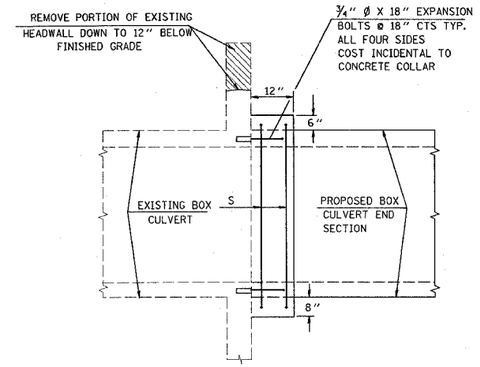

SIDE VIEW

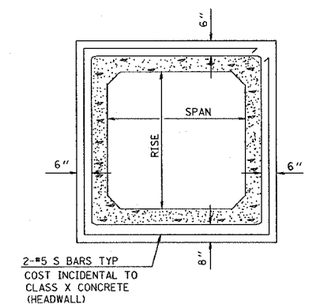

END VIEW

DETAILS OF CONCRETE COLLAR FOR PRECAST BOX CULVERT END SECTION

FOR INFORMATION ONLY	
SPAN X RISE	CL. X CONC. CU. YD. (EST.)
2' X 2'	0.26
3' X 2'	0.30
3' X 3'	0.34
4' X 2'	0.36
4' X 3'	0.39
4' X 4'	0.43
5' X 2'	0.41
5' X 3'	0.45
5' X 4'	0.49
6' X 2'	0.47
6' X 3'	0.51
6' X 4'	0.54

THIS WORK SHALL BE PAID FOR AT THE CONTRACT UNIT PRICE PER EACH FOR CONCRETE COLLAR. THE REMOVAL OF THE EXISTING CONCRETE HEADWALL SHALL BE INCLUDED IN THE PAY ITEM CONCRETE HEADWALL REMOVAL OR CONCRETE HEADWALL REMOVAL PARTIAL AS SHOWN IN THE PLANS.

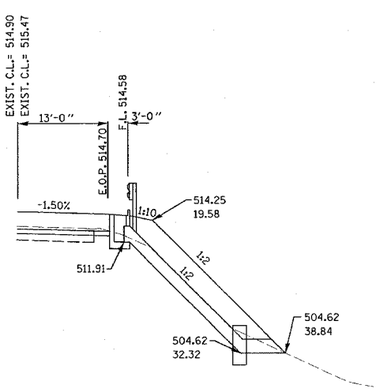

STA 1439+95.69 RT PIPE DRAIN DETAIL
(SEE CROSS SECTIONS FOR ADDITIONAL INFO.)

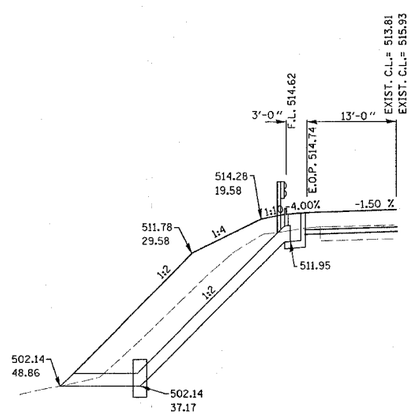

STA 1440+08.49 LT PIPE DRAIN DETAIL
(SEE CROSS SECTIONS FOR ADDITIONAL INFO.)

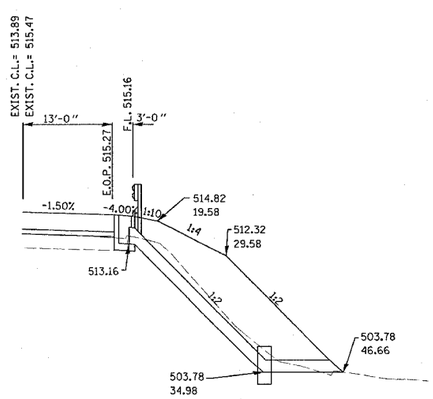

STA 1441+86.69 RT PIPE DRAIN DETAIL
(SEE CROSS SECTIONS FOR ADDITIONAL INFO.)

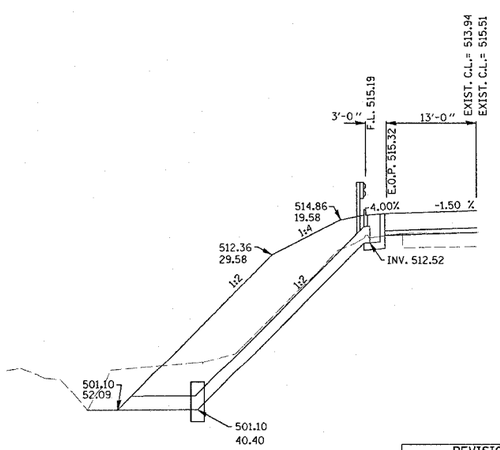

STA 1441+99.49 LT PIPE DRAIN DETAIL
(SEE CROSS SECTIONS FOR ADDITIONAL INFO.)

REVISIONS	
NAME	DATE

ILLINOIS DEPARTMENT OF TRANSPORTATION

DRAINAGE DETAILS

FAP 692
SECTION 12-1BR-1
MADISON COUNTY

DRAWN BY:

PLOT DATE: Tuesday May 03, 2005 @ 8:06:39 AM

DRAINAGE DETAILS - FAP 692 (IL 160)

PLAN
NOTE BOOK NO.
SURVEYED
PLOTTED
ALIGNMENT CHECKED
RT. OF WAY CHECKED
CADD FILE NAME
BY
DATE

5/3/2005
Tuesday May 03, 2005 @ 8:06:39 AM
c:\projects\ed15620\plan\plin2620a.dgn LV=1.63