FAP ROUTE	SECTION	COUNTY	TOTAL SHEETS	SHEET NO
789	1T	MADISON	15	8
STA.		TO STA.		

CONTRACT NO.: 76648

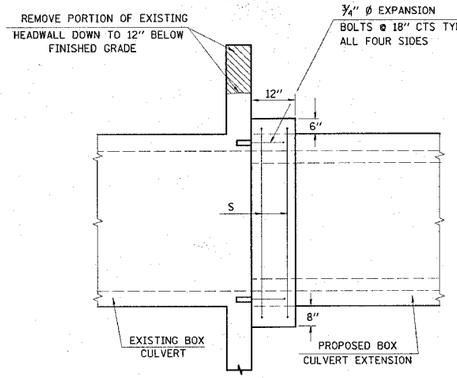

SIDE VIEW

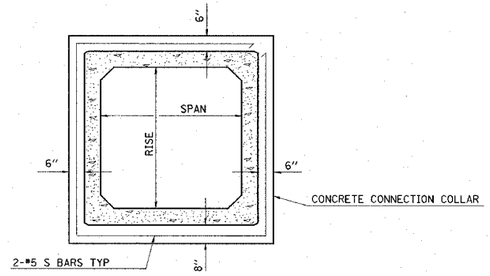

END VIEW

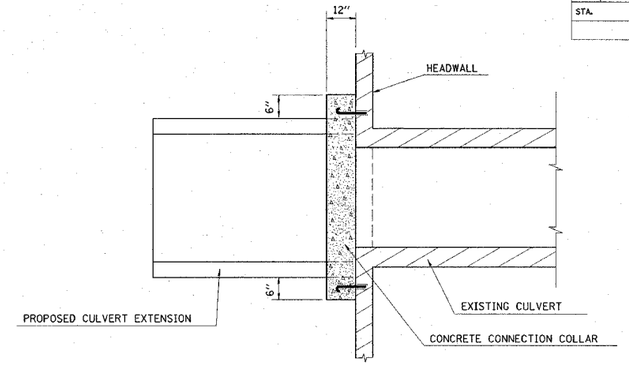

GENERAL NOTES

1. THE CONNECTION COLLAR SHALL BE CLASS I CONCRETE THROUGHOUT.
2. UNSUITABLE MATERIAL SHALL BE DISPOSED OF AS PER THE STANDARD SPECIFICATIONS.
3. EXPANSION BOLTS SHALL CONSIST OF SELF-DRILLING EXPANSION SHIELDS AND 3/4" DIAMETER HOOKED BOLTS. HOOKED BOLTS SHALL EXTEND A MINIMUM OF 9" INTO NEW CONCRETE.
4. IN CASE THE EXTENSION OF SKEWED CULVERTS, THE PIPES SHALL BE CUT AS NECESSARY TO MEET THE FIELD CONDITION AND AS DIRECTED BY THE ENGINEER.
5. INSTALLATION OF THE CULVERT EXTENSION SHALL INCLUDE CONCRETE REMOVAL AS NECESSARY. CONCRETE CONNECTION COLLARS, FITTING, 3/4" EXPANSION BOLTS, REINFORCEMENT BARS, AND ALL OTHER MATERIAL REQUIRED TO COMPLETE THIS WORK. COST OF THIS WORK SHALL BE INCLUDED IN THE CONTRACT UNIT PRICE BID FOR CULVERT AS SPECIFIED.

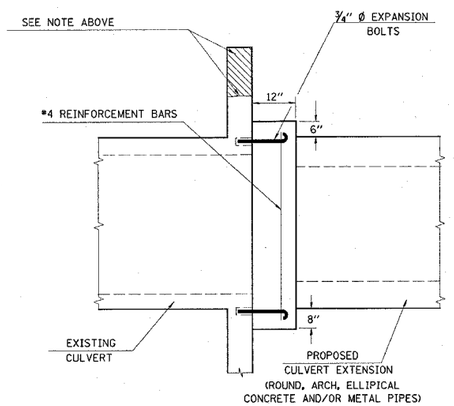

SIDE VIEW

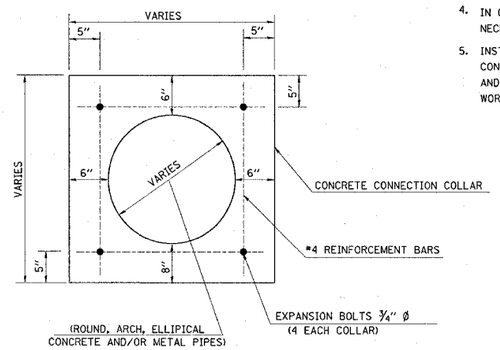

END VIEW

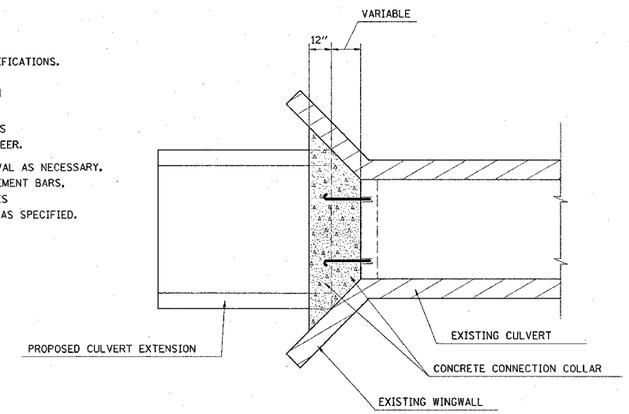

PLAN VIEW
NOT TO SCALE

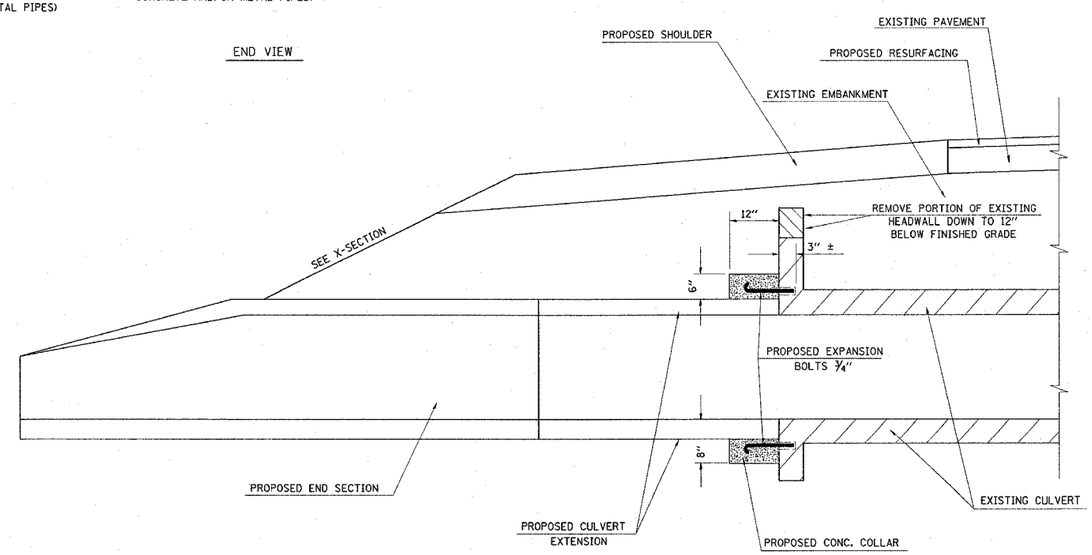

NOT TO SCALE

ALL DIMENSIONS INCHES UNLESS OTHERWISE NOTED

REVISIONS	
NAME	DATE

ILLINOIS DEPARTMENT OF TRANSPORTATION

DETAILS OF CONCRETE COLLAR CULVERT EXTENSIONS

FAP ROUTE 789
SECTION 1T
MADISON COUNTY

DRAWN BY:

PLOT DATE: 3/30/2005

PLAN	BY	DATE
NOTE BOOK NO.	SURVEYED	
	PLOTTED	
	ALIGNMENT CHECKED	
	ELEV. MAP CHECKED	
	CADD FILE NAME	

@@DATL@@
3/30/2005
c:\pw_projects\d0250\plans\pin097a.dgn
@@REF-
@@REF-
@@REF-