F.A.U. ROUTE	SECTION	COUNTY	TOTAL SHEETS	SHEET NO.
5349	04-00170-00-SP	DEKALB	17	17
CITY OF DEKALB STANDARD DETAILS				
F.H.W.A. REG. 5	ILLINOIS	FED. AID PROJECT		

TYPICAL DRIVEWAY PLAN:

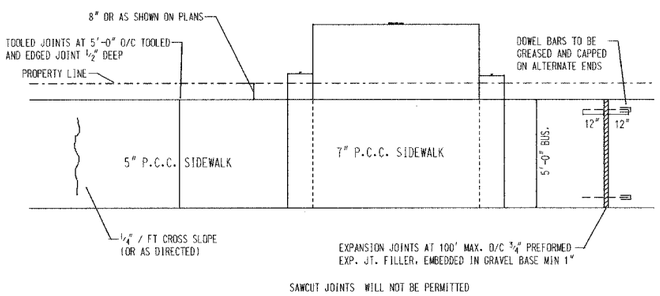

SAWCUT JOINTS WILL NOT BE PERMITTED

TYPICAL SECTION SIDEWALK DETAILS:

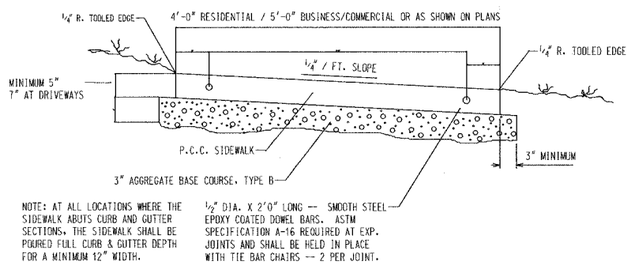

NOTE: AT ALL LOCATIONS WHERE THE SIDEWALK ABUTS CURB AND GUTTER SECTIONS, THE SIDEWALK SHALL BE POURED FULL CURB & GUTTER DEPTH FOR A MINIMUM 12" WIDTH.

THE CONTRACT UNIT PRICE FOR P.C.C. SIDEWALK 5" AND 7" SHALL INCLUDE THE DOWEL BARS, EXPANSION JOINTS, TOOLED JOINTS AND BASE MATERIAL AS SPECIFIED

STANDARD DETAIL FOR P.C.C. SIDEWALK, 5" & 7"	REVISIONS 03/20/01 MCB	CITY OF DEKALB STREET STANDARD ST-105

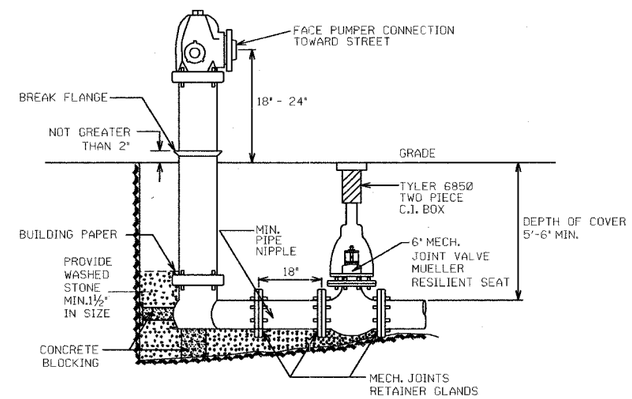

DEKALB HYDRANT UNIT IS
A423MUELLER SUPER CENTURION 250 HYDRANT OR WATEROUS
WB67-250, 6' TRENCH DEPTH, 6" MJ SHOE, 1 1/2"
PENTAGON OPERATING NUT, OPEN LEFT, (1) 4" NST
PUMPER NOZZLE, (2) 2 1/2" NST HOSE NOZZLES,
PAINTED RED, NO ALTERATIONS ALLOWED

THE CONTRACT UNIT PRICE FOR "HYDRANTS" SHALL INCLUDE THE AUXILARY VALVE AND VALVE BOX AS SPECIFIED.

STANDARD DETAIL FOR FIRE HYDRANT WITH AUXILIARY VALVE & ADJUSTABLE C.I. BOX (WITH CAST IRON PIPE NIPPLE)	REVISIONS RBR 1/15/04	CITY OF DEKALB WATER MAIN STANDARD WM-309

TYPICAL BUTT JOINT DETAIL FOR RESURFACING WITHOUT MACHINE LEVELING BINDER

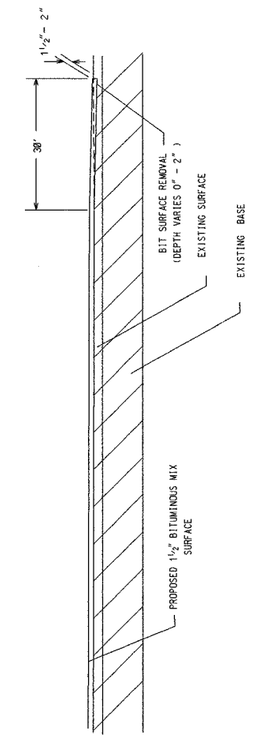

STANDARD DETAIL OF BUTT JOINTS HIGH VOLUME STREET	REVISIONS 02/11/04	CITY OF DEKALB STREET STANDARD