CONTRACT NO. 88753

F.A.P. RTE.	SECTION	COUNTY	TOTAL SHEETS	SHEET NO.
317	***	FULTON	684	20
STA.		TO STA.		
FED. ROAD DIST. NO.	ILLINOIS	FED. AID PROJECT		

***181,(18BRY&18BRY-1)BR,18B-1

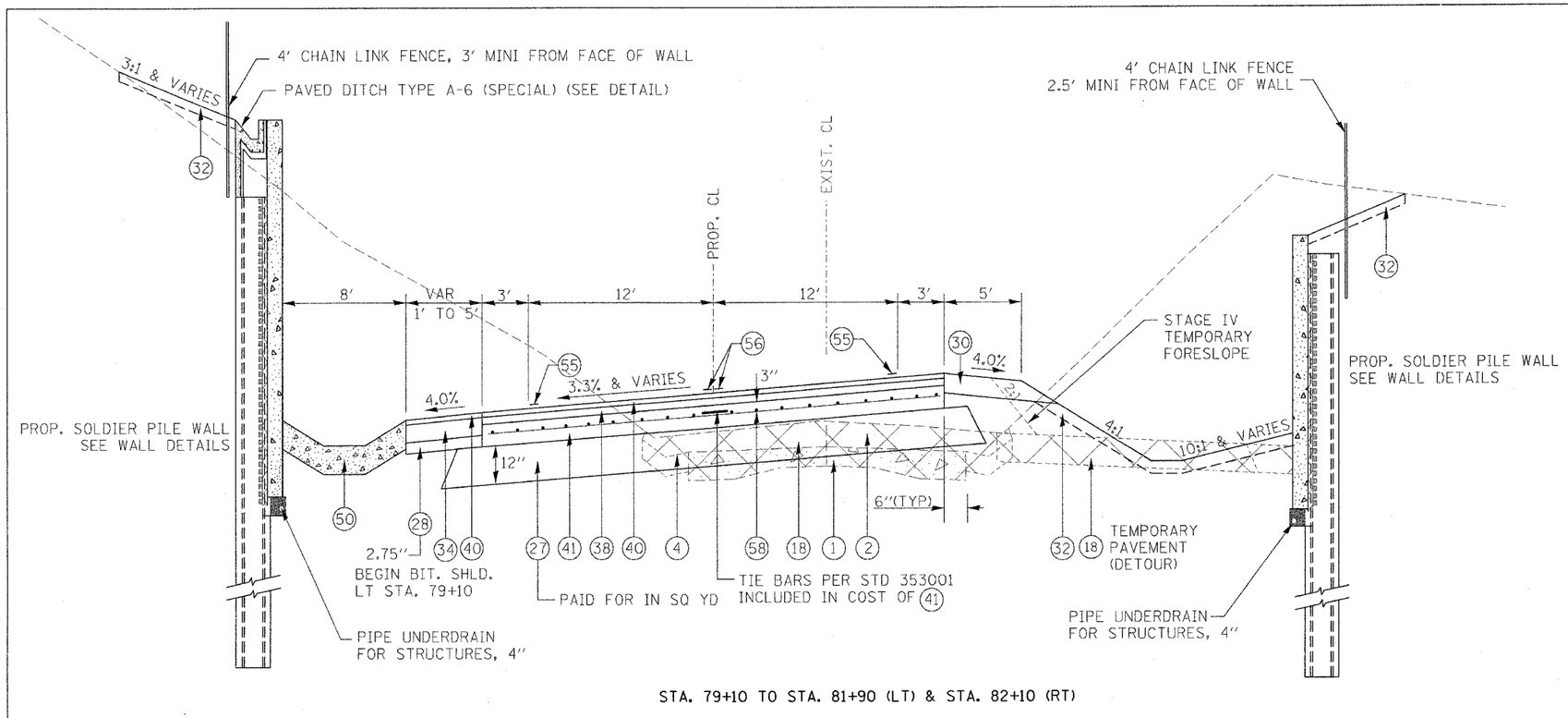

STA. 79+10 TO STA. 81+90 (LT) & STA. 82+10 (RT)

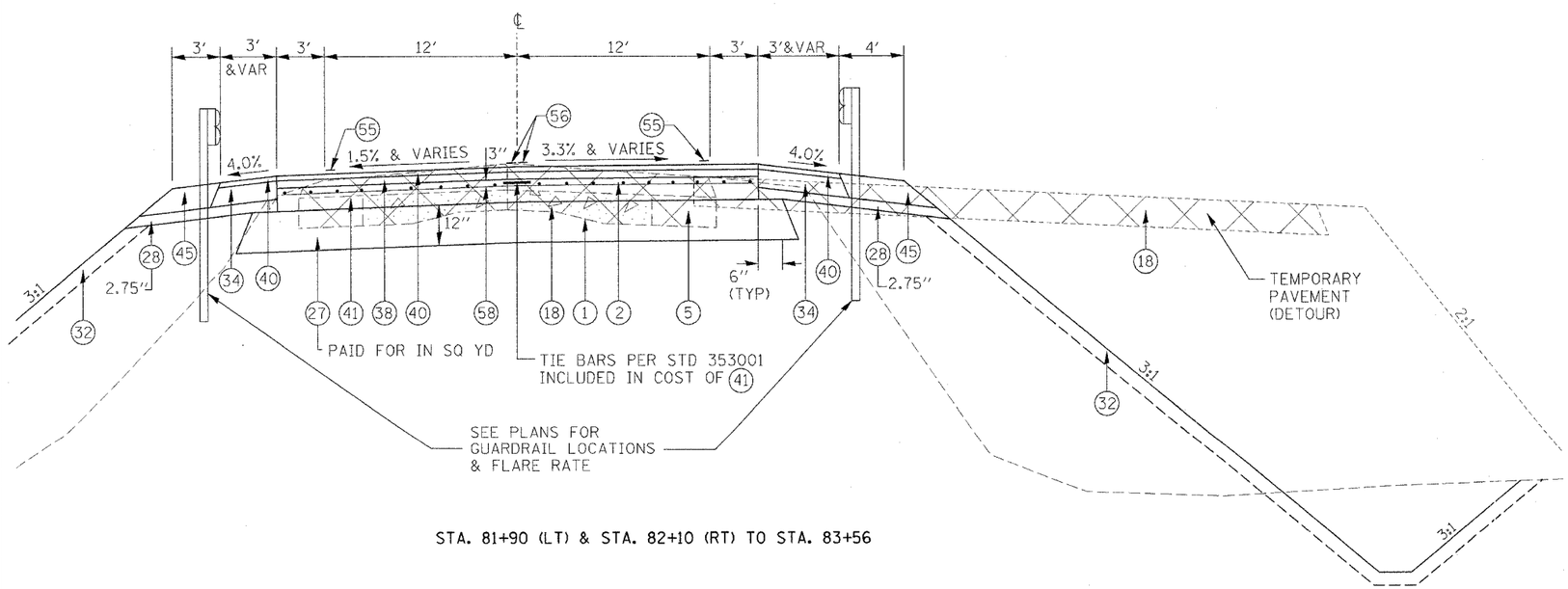

STA. 81+90 (LT) & STA. 82+10 (RT) TO STA. 83+56

LEGEND

1. EXISTING P. C. C. PAVEMENT
2. EXISTING BITUMINOUS OVERLAY
3. EXISTING AGGREGATE SHOULDER
4. EXISTING P. C. C. GUTTER TYPE A OR TYPE B (MOD.)
5. EXISTING BASE COURSE WIDENING
15. PROPOSED SAW CUT (PAID FOR AS "SAW CUTTING" - FT)
16. EARTH EXCAVATION (WIDENING) (CU YD)
17. PROPOSED BIT. SURFACE REMOVAL (COLD MILLING) 1/4" ***
18. PROPOSED PAVEMENT REMOVAL (SQYD)
25. PROPOSED STRIP REFLECTIVE CRACK CONTROL (FT)
26. PROPOSED LIME-MODIFIED SOIL (SQ YD)
27. PROPOSED SUB-BASE GRANULAR MATERIAL, TYPE B (SQ YD) OR (TONS)
28. PROPOSED SUB-BASE GRANULAR MATERIAL, TYPE C (TONS)
29. PROPOSED AGGREGATE BASE COURSE, TYPE B 8" (SQ YD)
30. PROPOSED AGGREGATE SHOULDER TYPE B 6" (TONS)
31. PROPOSED AGGREGATE SHOULDER TYPE B - VAR DEPTH (TONS)
32. PROP. TOPSOIL EXCAVATION & PLACEMENT 4" & CLASS 2A SEEDING
33. PROPOSED AGGREGATE SURFACE COURSE, TYPE A 8" (TONS)
34. PROPOSED BITUMINOUS SHOULDER 6 1/2" (SQ YD)
35. PROPOSED BITUMINOUS SHOULDER 6" (SQ YD)
36. PROPOSED BIT. CONC. BINDER COURSE 8" (SQ YD)
37. PROPOSED BIT. CONC. BINDER COURSE 9" (SQ YD)
38. PROPOSED POLYMERIZED BIT. CONC. BINDER COURSE 2 1/4" (TONS)
39. PROPOSED POLYMERIZED BIT. CONC. SURFACE COURSE 2" SUPERPAVE, MIX "D", N70 (TONS)
40. PROPOSED POLYMERIZED BIT. CONC. SURFACE COURSE 1 1/2" SUPERPAVE, MIX "D", N70 (TONS)
41. PROPOSED P. C. C. BASE COURSE 7" (SQ YD)
42. PROPOSED BIT. SURFACE TREATMENT, CLASS A-3
45. PROPOSED GUARDRAIL AGGREGATE EROSION CONTROL (CA 1 - TONS)
46. PROPOSED STEEL PLATE BEAM GUARDRAIL, TYPE A
47. PROPOSED CABLE ROAD GUARD, SINGLE STRAND (PER STD 636001)
48. PROPOSED COMB. CONC. CURB & GUTTER TYPE M 4.06
49. PROPOSED GUTTER TYPE A (MODIFIED)
50. PROPOSED PAVED DITCH TYPE B-22 (STD 606401)
55. PROPOSED PAINT PAVEMENT MARKING - 4" WHITE
56. PROPOSED PAINT PAVEMENT MARKING - 4" YELLOW
57. NON-WOVEN GEOTECHNICAL FABRIC PER 1080.02 (INCL. IN COST OF (45))
58. PAVEMENT FABRIC
59. GEOTECHNICAL FABRIC FOR GROUND STABILIZATION (SQ YD)

*** SEE SPECIAL PROVISIONS
1/4" IS AT ℄

REVISIONS	
NAME	DATE

ILLINOIS DEPARTMENT OF TRANSPORTATION

TYPICAL SECTION
FAP 317 (US 24)

SCALE: VERT. HORIZ.
DATE
DRAWN BY
CHECKED BY

PLOT DATE = 4/25/2005
FILE NAME = S:\GEN\DRAFT\STD&PLNS\SGU4091\88753\Phase II PowerDraft Files\Typical Sections\us24typicals.dgn
PLOT SCALE = 50.0000 ' / IN.
REFERENCE = REF