93393

ROUTE NO.	SECTION	COUNTY	TOTAL SHEETS	SHEET NO.
MASSEY LANE	*	MORGAN	15	9
FED. RD. DIST. NO.		ILLINOIS	FED. AID PROJECT	

* 03-06118-00-BR

* Dowel Rods shall be grouted after beams are in place and allowed to cure (Min. 24 hrs.) prior to grouting the shear keys. Cost shall be included in the cost of the unit price for Precast Prestressed Concrete Deck Beams (21" Depth).

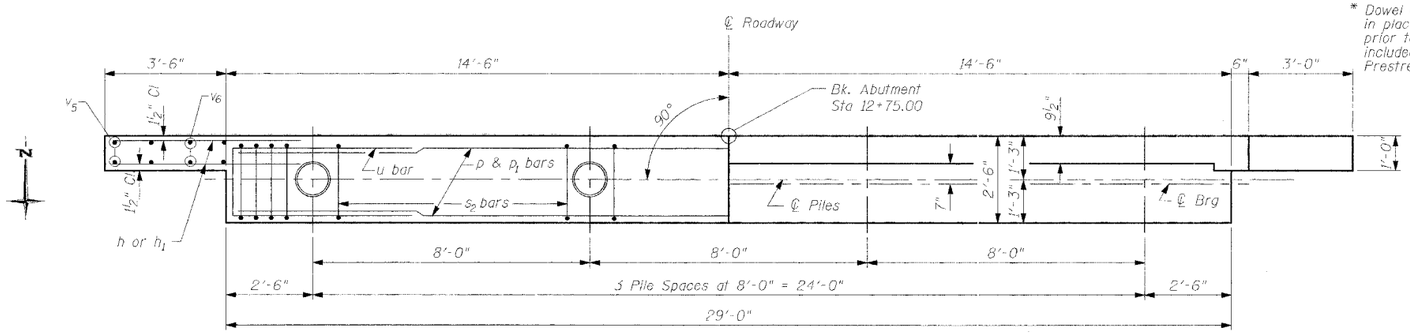

PLAN

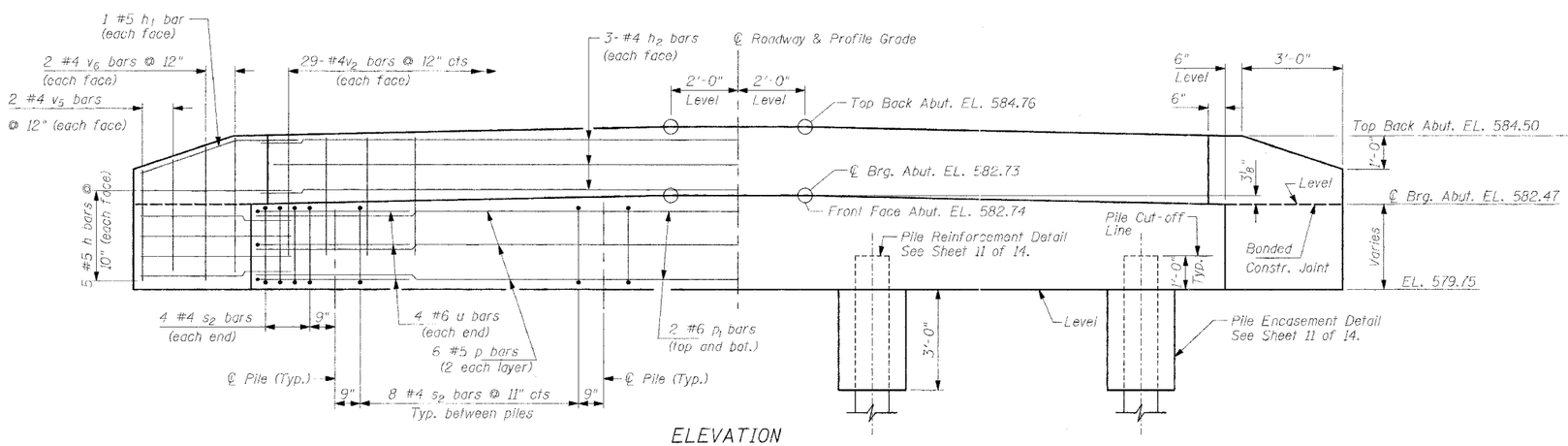

ELEVATION

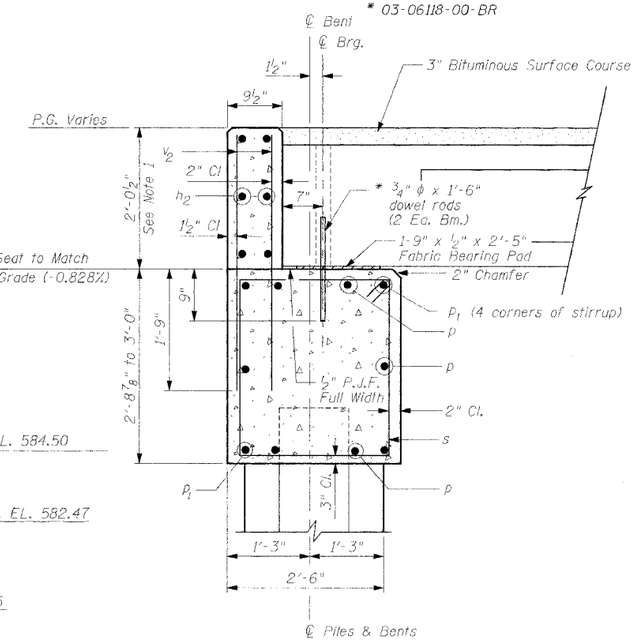

SECTION THRU ABUTMENT

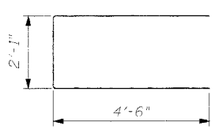

Bar u

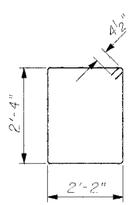

Bar s

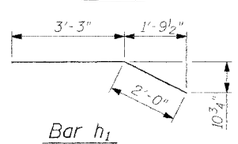

Bar h_1

PILE DATA

Type: Metal Shell 12" Dia.
Capacity: 32.5 Ton
Est. Length: 56'-0"
Num Required: 4

DESIGN STRESSES

f'c = 3500 psi
fy = 60000 psi

QUANTITIES FOR ONE ABUTMENT

Concrete Structures	10.5 Cu Yd
Reinforcement Bars	1,110 Pound

Furn. Metal Shell Piles, 12" Dia.	224 Foot
Driving and Filling Shells	224 Foot

NOTES

1. The backwall and the portion of the wingwalls above the bonded construction joint shall be cast against the in place beam.

2. Reinforcement bars shall conform to AASHTO M-31, M-42 or M-53, Grade 60.

BAR LIST FOR ONE ABUTMENT

Bar	No.	Size	Length	Shape
h	20	#5	5'-0"	—
h_1	4	#5	5'-3"	⌒
h_2	6	#4	28'-6"	—
p	6	#5	28'-6"	—
p_1	4	#6	28'-6"	—
s_2	32	#4	9'-9"	□
u	8	#6	11'-1"	▭
v_2	58	#4	3'-8"	—
v_5	8	#4	3'-6"	—
v_6	8	#4	4'-2"	—

DRAWN BY MKC
CHECKED BY LEL
APPROVED BY REG
DATE MARCH, 2005

REVISIONS
DATE | BY

NORTH ABUTMENT
MASSEY LANE OVER SANDY CREEK
SEC 03-06118-00-BR STA. 12+25.00

MORGAN COUNTY, ILLINOIS

Benton & Associates, Inc.
Consulting Engineers / Land Surveyors
1970 West Lafayette Avenue Jacksonville, Illinois 62650
Phone : 217-245-4146 Fax : 217-245-4149
IL Design Firm Registration No. 184-000852

FIELD BOOK: | SCALE: N.T.S. | JOB NO. 02E1314 | SHEET 9 OF 15