ROUTE	SECTION	COUNTY	TOTAL SHEETS	SHEET NO.
TR 22	04-15109-00-BR	MARION	10	8
FED. ROAD DIST. NO. 7	ILLINOIS	FED. AID PROJECT		
		CONTRACT NO. 95430		

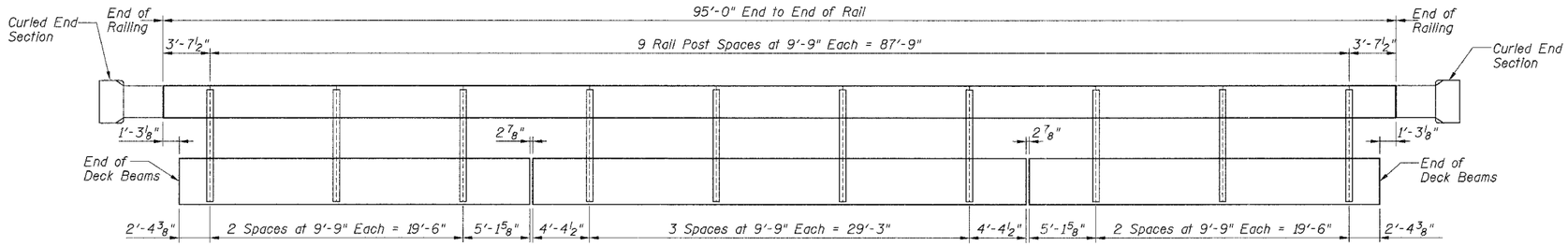

ELEVATION

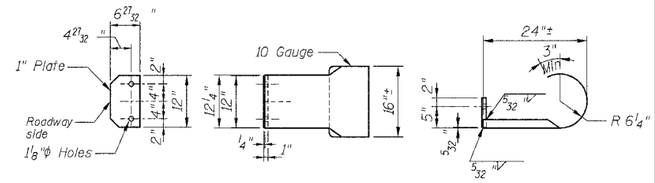

CURLED END SECTION DETAILS

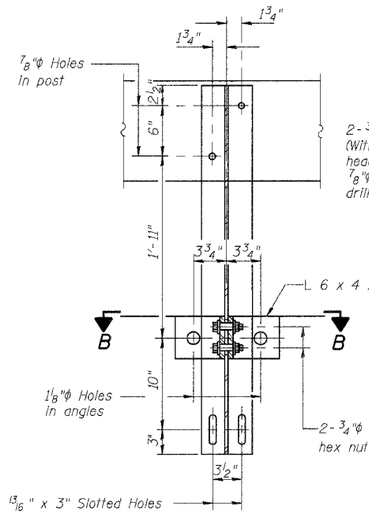

SECTION A-A

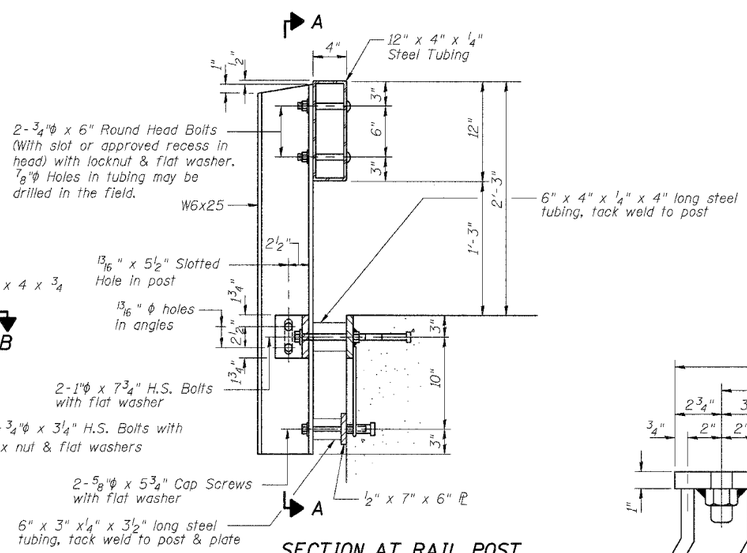

SECTION AT RAIL POST

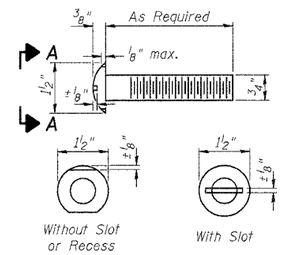

VIEW A-A
ROUND HEAD BOLT

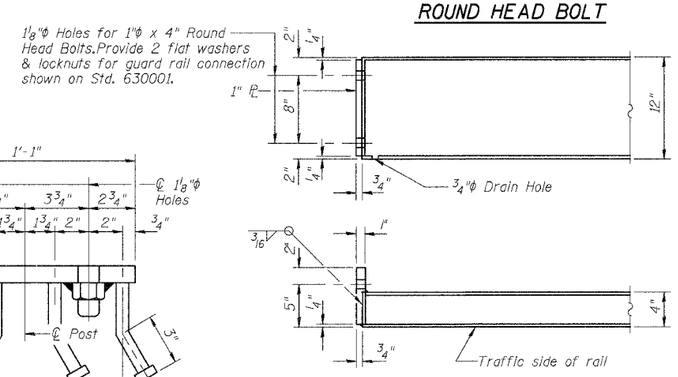

VIEW C-C

END OF RAIL DETAILS

NOTES

Hollow structural steel tubing shall conform to the requirements of ASTM designation A-500 Grade B Structural Steel Tubing and shall meet the longitudinal CVN requirements of 15 ft-lbs at 0° F.

All other steel shapes and plates shall conform to the requirements of AASHTO M-270 Grade 36 except posts and angles shall conform to AASHTO M-270, Grade 50.

Bolts, cap screws, and nuts shall conform to the requirement of ASTM designation A-307 except for high strength bolts, nuts and washers noted which shall conform to AASHTO M-164.

All bolts, nuts, cap screws, washers and lock washers shall be galvanized in accordance with AASHTO M-232.

All posts, railing, rail splices, anchor devices and angles shall be galvanized after shop fabrication in accordance with AASHTO M-111 and ASTM A-385. Galvanized rail shall not be painted.

Railing shall be in accordance with Section 509 of the Standard Specifications, except as noted, and will be paid for at the contract unit price per foot for STEEL RAILING, TYPE S1.

All field drilled holes shall be coated with an approved zinc rich paint before erection.

The lower portion of the post flange in contact with concrete shall receive two coats of asphalt paint conforming to Section 1060.07 Type II or place ⅛" fabric bearing pad between the post and concrete.

The ¾"φ high strength bolts used to connect the 6 x 4 x ¾ angles to the post shall be tightened in accordance with Article 505.04(f)(2) of the Standard Specifications. The 1"φ high strength bolts connecting the angles to the concrete shall be tightened to a snug fit and given an additional ⅛ turn. The ⅝"φ cap screws in bottom of posts shall be tightened to a snug fit only.

The Curled End Section shall be considered incidental to the cost of the "STEEL RAILING, TYPE S1", and no additional compensation will be allowed.

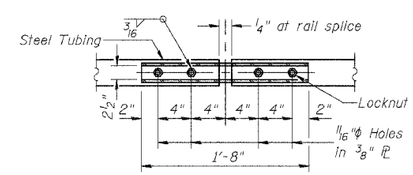

PLAN-BOTT. SPLICE PL TYPICAL

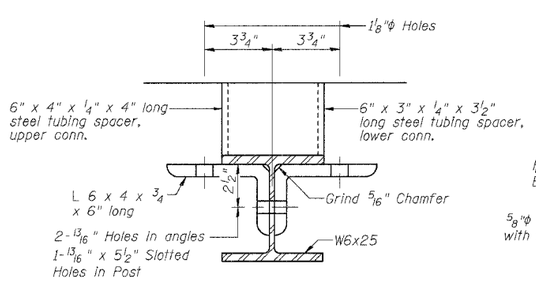

SECTION B-B

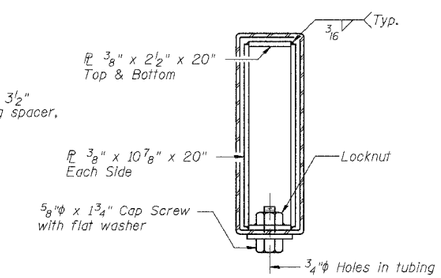

SECTIONS AT RAIL SPLICE

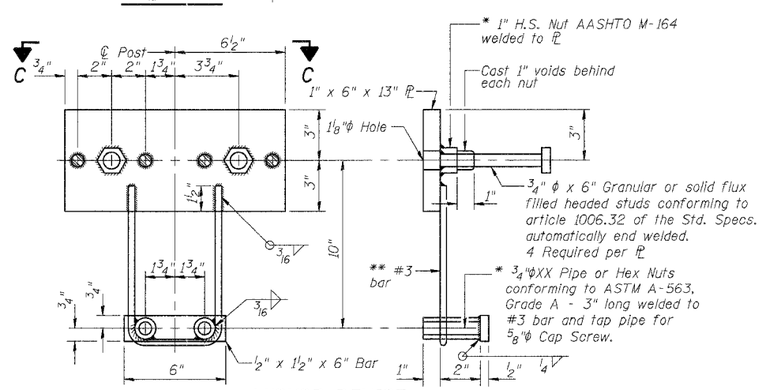

ANCHOR DEVICE

* Threaded areas shall be plugged or blocked off during casting of beam.

** Whenever the lower insert assemblies interfere with strand locations, the #3 bars shall be cut and adjusted in order to allow raising or lowering of the lower inserts. Maximum adjustment not to exceed ½".

BILL OF MATERIAL

Item	Unit	Quantity
Steel Railing, Type S1	Foot	190

STEEL RAILING, TYPE S1 DETAILS
PROPOSED BRIDGE CARRYING TR 22 OVER LOST CREEK
SECTION 04-15019-00-BR
MARION COUNTY, ILLINOIS

Sheet 8 of 10
Job No. 50804

03/15/2005

RHUTASEL and ASSOCIATES, INC.
CONSULTING ENGINEERS • LAND SURVEYORS
CENTRALIA, ILLINOIS FREEBURG, ILLINOIS