STATE OF ILLINOIS
DEPARTMENT OF TRANSPORTATION

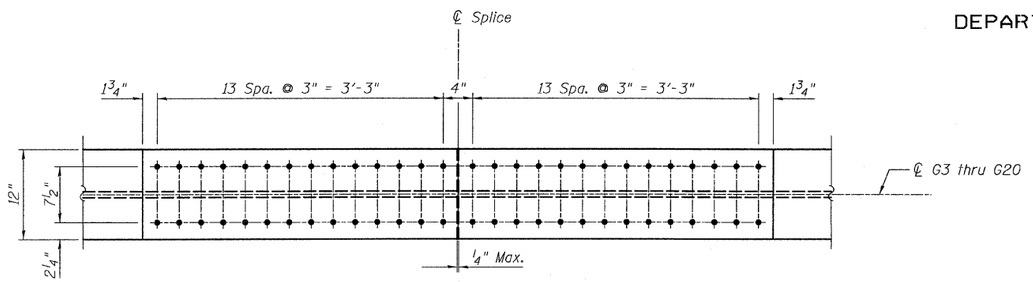

TOP VIEW

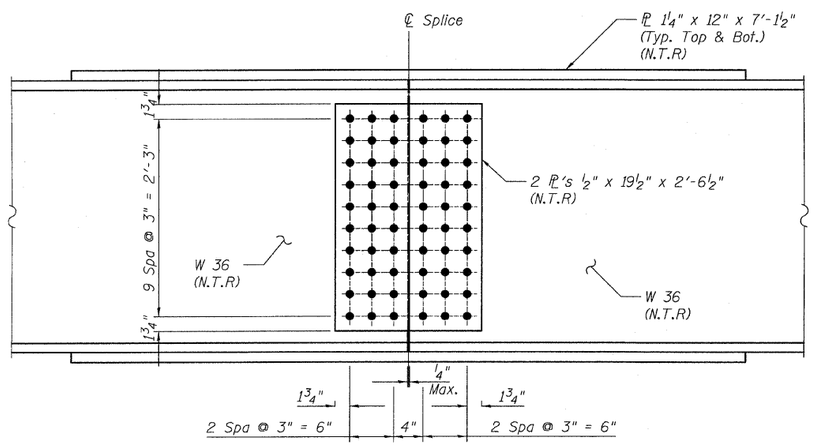

ELEVATION
FIELD SPLICES 3a, 3b, 3c
(G3 Thru G20)

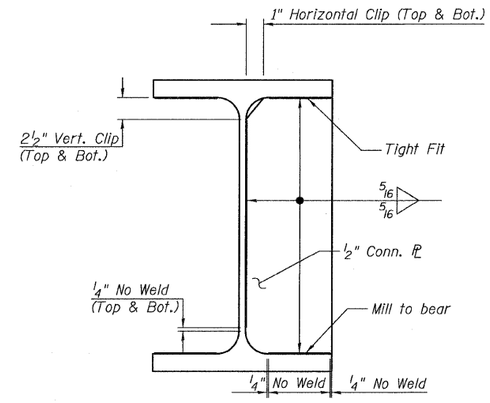

CONN. PLATE DETAIL
FOR ROLLED BEAM

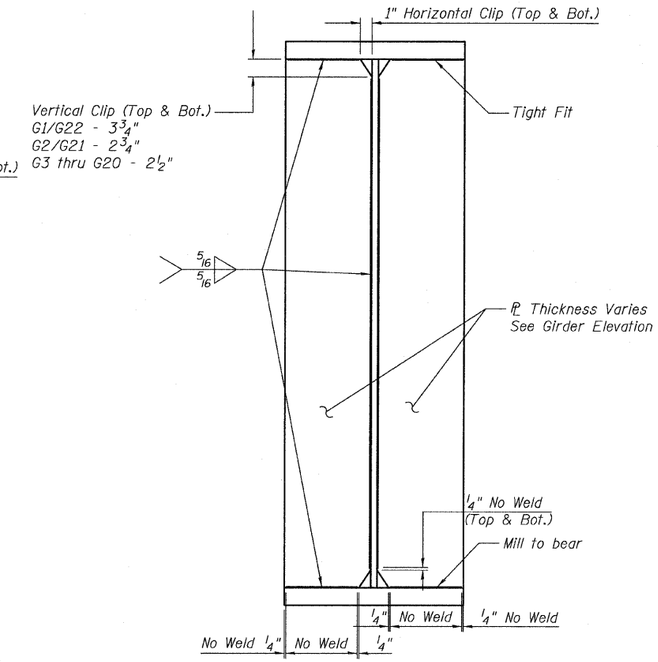

TYPICAL BEARING STIFFENER AND CONN PLATE
DETAIL @ GIRDERS

NOTES:

1. All splice materials to be AASHTO M 270 Grade 50.
2. All bolts shall be ⅞" ϕ AASHTO M164 with 15/16" ϕ holes.
3. Load carrying components designated *NTR* shall conform to the Supplemental Requirements for Notch Toughness, Zone 2.

FIELD SPLICE 3 & CONNECTION DETAILS
CENTRAL / I-55
STRUCTURE NO. 016-0724

p:\01345\structur\C2 Central Ave_016-0724\55c2fr-amedt12.dgn 12:03:25 PM

TYLIN INTERNATIONAL

DESIGNED	-	JMA	
CHECKED	-	AMD.	
DRAWN	-	JMA	
CHECKED	-	AMD.	
DATE	-	03/25/2011	

REVISIONS	
NAME	DATE

SHEET NO. 107
239 SHEETS

F.A.I RTE.	SECTION	COUNTY	TOTAL SHEETS	SHEET NO.
55	0711.2R & 1011.1BR	COOK	741	431
		CONTRACT NO. 60999		
FED. ROAD DIST. NO. 1	ILLINOIS	FED. AID PROJECT		

4/28/2011