STATE OF ILLINOIS
DEPARTMENT OF TRANSPORTATION

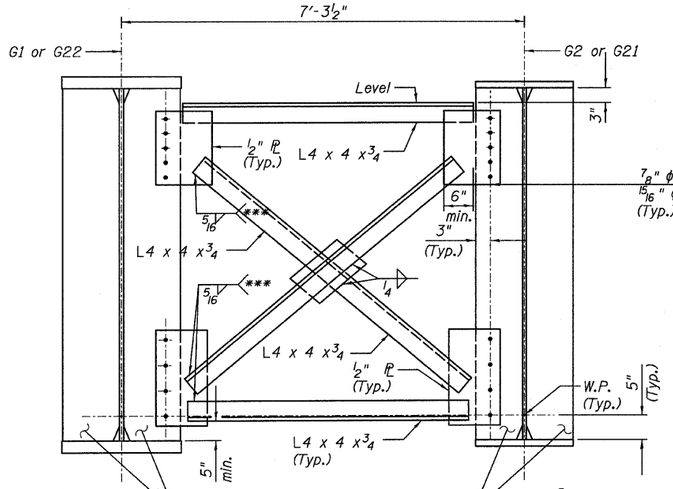

INTERIOR CROSS FRAME CF4

(80 Required)

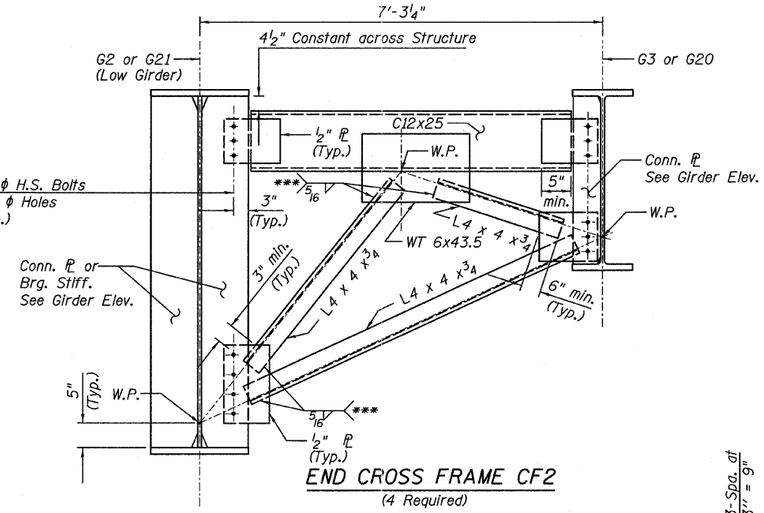

END CROSS FRAME CF2

(4 Required)

Note: Place Cross Frame with channel flanges and oustanding angle legs outward from joint. Weld on near side for 1/2" plate.

*** Fillet weld angle along 3 sides on one face of gusset plate.

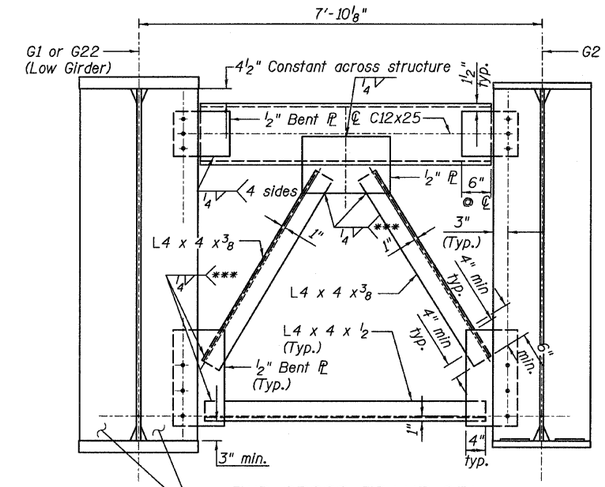

END CROSS FRAME CF1

(4 Req'd.)

Note: Place Cross Frame with channel flanges and oustanding angle legs outward from joint. Weld on near side for 1/2" plate.

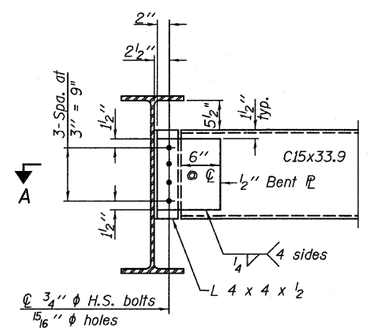

END DIAPHAGM D2

(32 Required)

Note: Two hardened washers required for each set of oversized holes.

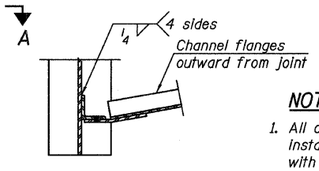

SECTION A-A

NOTES:

1. All cross frames or diaphragms shall be installed as steel is erected and secured with erection pins and bolts except as otherwise noted. Individual cross frames or diaphragms at supports may be temporarily disconnected to install bearing anchor rods.

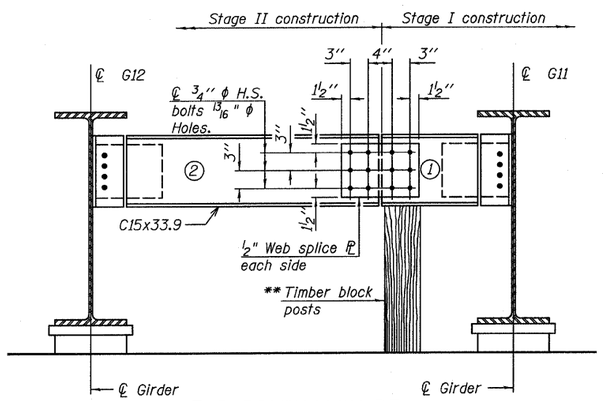

END DIAPHRAGM D3

(2 Required)

** Cost of Timber Block Posts is included with Erecting Structural Steel.

END DIAPHRAGM STAGE CONSTRUCTION SEQUENCE

1.) Order diaphragm in two sections.
2.) Attach section 1 of diaphragm to Beam G11.
3.) Place timber block posts between section 1 of diaphragm and abutment bearing section.
4.) Attach section 2 of diaphragm to both Beam G12 and section 1 of diaphragm during stage II construction with splice plates.
5.) Remove timber block posts.

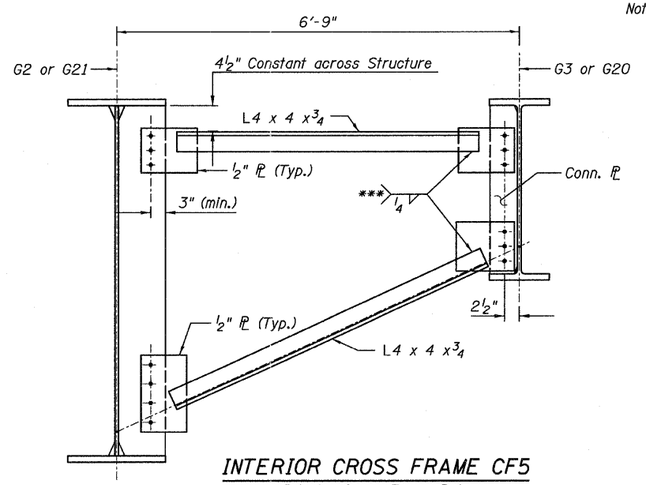

INTERIOR CROSS FRAME CF5

Interior Cross Frame Between G2 & G3 (G20 & G21)
(32 Required)

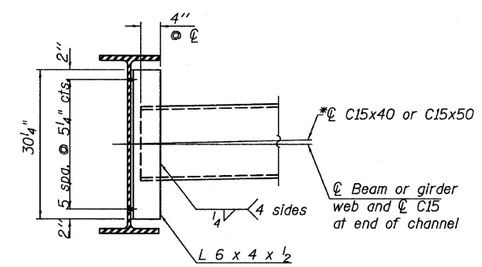

INTERIOR DIAPHAGM D1

(255 Required)

Note:
Two hardened washers required for each set of oversized holes.
*Alternate channels are permitted to facilitate material acquisition. Calculated weight of structural steel is based on the lighter section. The alternate, if utilized, shall be provided at no additional cost to the Department.

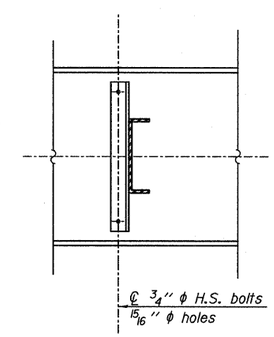

CROSS FRAMES & DIAPH.
CENTRAL/I-55
STRUCTURE NO. 016-0724

TY·LIN INTERNATIONAL

DESIGNED	- JMA	REVISIONS	
CHECKED	- AMD,	NAME	DATE
DRAWN	- JMA		
CHECKED	- AMD,		
DATE	- 03/25/2011		

SHEET NO. 108	F.A.I RTE.	SECTION	COUNTY	TOTAL SHEETS	SHEET NO.
239 SHEETS	55	0711.2R & 1011.1BR	COOK	741	432
			CONTRACT NO. 60999		
	FED. ROAD DIST. NO. 1	ILLINOIS	FED. AID PROJECT		

4/28/2011

p:\01345\structur\C2 Central Ave. 016-0724\55c2framedtl3.dgn

12:03:26 PM