STATE OF ILLINOIS
DEPARTMENT OF TRANSPORTATION

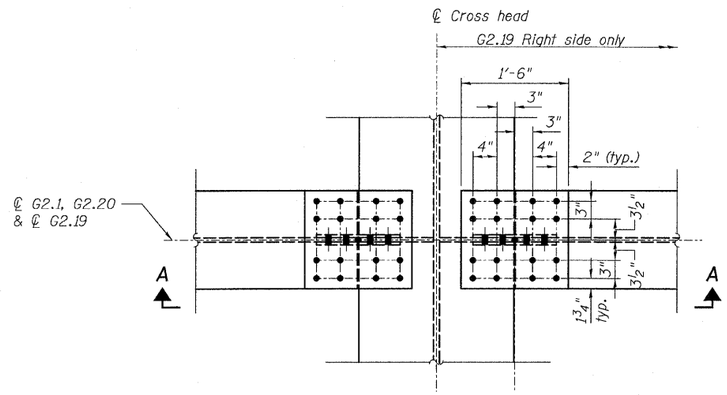

DETAIL 34
(Top flange)

N

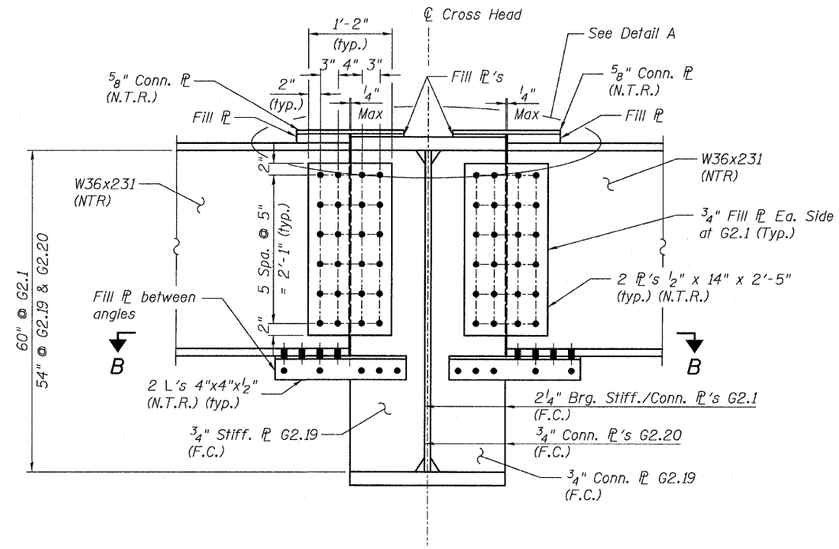

SECTION A-A

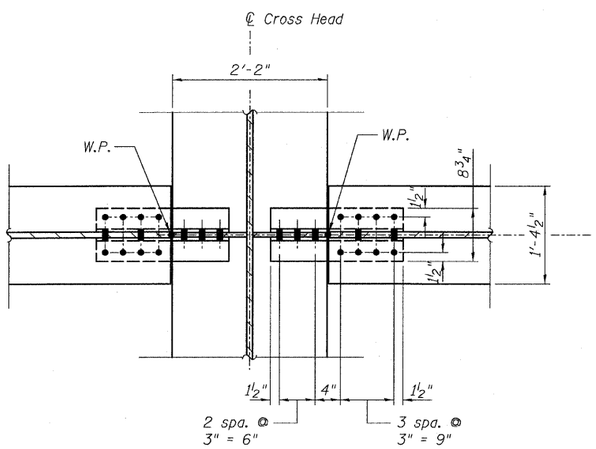

SECTION B-B
(Bottom flange)

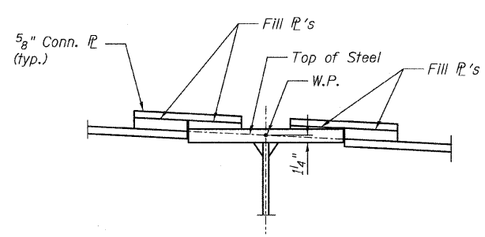

DETAIL A

NOTES:

1. All steel shall be AASHTO M 270 Grade 50.
2. Load carrying components designated "N.T.R." shall conform to the Supplemental Requirements for Notch Toughness, Zone 2.
3. F.C. indicates Fracture Critical Material, AASHTO Zone 2.

CONNECTION DETAILS 34
RAMP 2 FLARE
STRUCTURE NO. 016-0724

TYLIN INTERNATIONAL

DESIGNED - JPN	REVISIONS	
CHECKED - AMD,	NAME	DATE
DRAWN - JMA		
CHECKED - AMD,		
DATE - 03/25/2011		

SHEET NO. 147	F.A.I RTE.	SECTION	COUNTY	TOTAL SHEETS	SHEET NO.
	55	0711.2R & 1011.1BR	COOK	741	471
239 SHEETS			CONTRACT NO. 60999		
	FED. ROAD DIST. NO. 1	ILLINOIS	FED. AID PROJECT		

pt\0134\structur\C2 Central Ave. 016-0724\55f2framedt117.dgn 12:53:25 PM
4/28/2011