STATE OF ILLINOIS
DEPARTMENT OF TRANSPORTATION

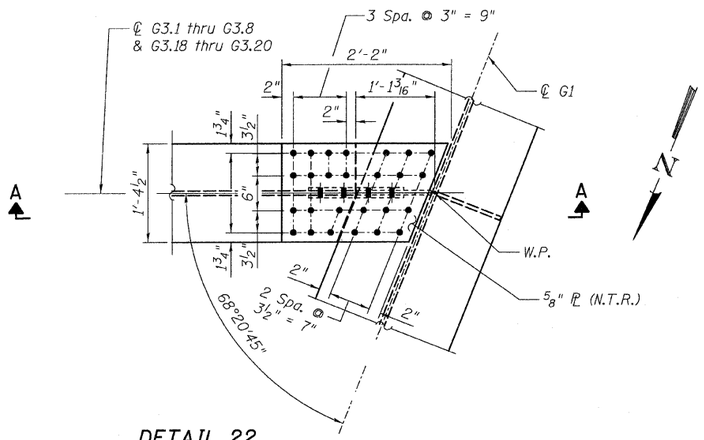

DETAIL 22
(Top Flange)

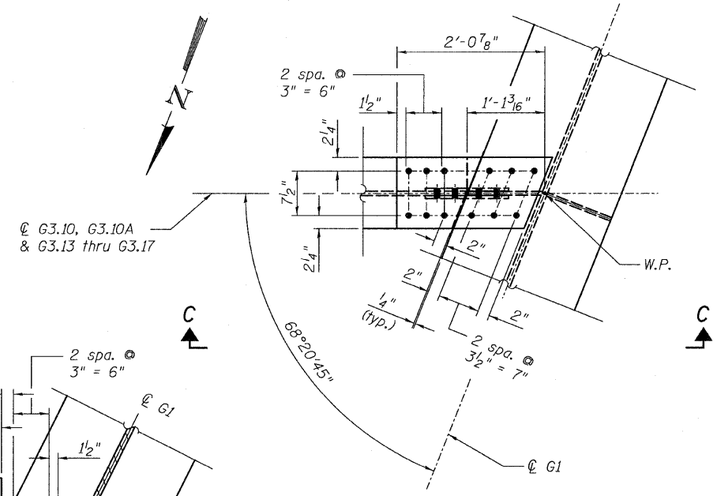

DETAIL 23
(Top Flange)

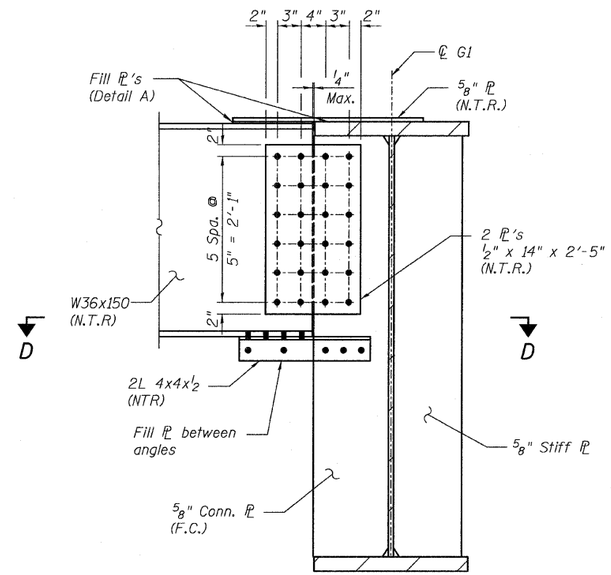

SECTION C-C

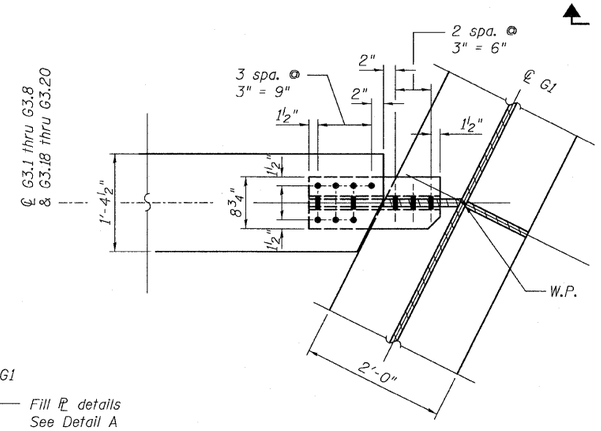

SECTION B-B
(Bottom Flange)

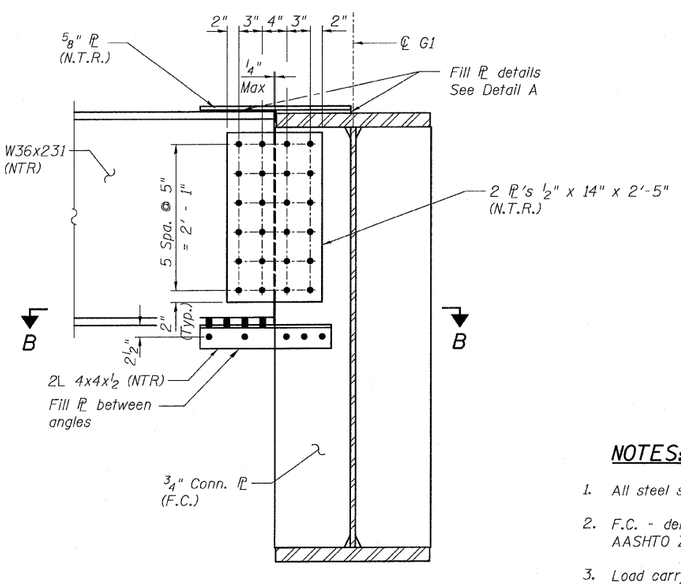

SECTION A-A

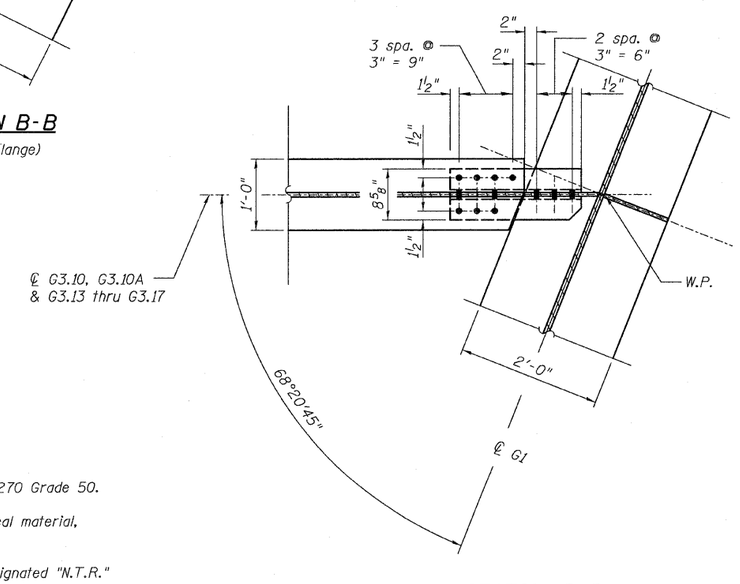

SECTION D-D
(Bottom Flange)

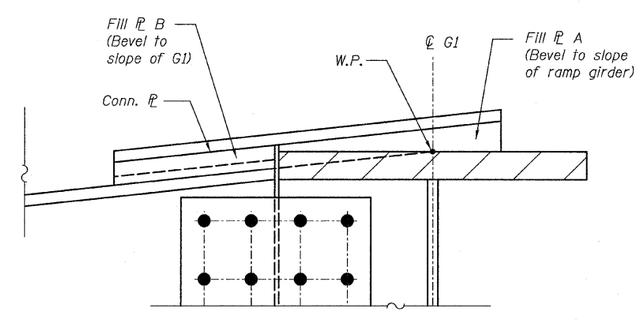

DETAIL A
(Not to scale)

NOTES:

1. All steel shall be AASHTO M 270 Grade 50.
2. F.C. - denotes Fracture Critical material, AASHTO Zone II.
3. Load carrying components designated "N.T.R." shall conform to the supplemental requirements for Notch Toughnes, Zone 2.

CONNECTION DETAILS 22 & 23
RAMP 3 FLARE
STRUCTURE NO. 016-0724

TYLIN INTERNATIONAL

DESIGNED	- JPN	REVISIONS	
CHECKED	- AMD,	NAME	DATE
DRAWN	- MAU		
CHECKED	- AMD,		
DATE	- 03/25/2011		

SHEET NO. 159
239 SHEETS

F.A.I RTE.	SECTION	COUNTY	TOTAL SHEETS	SHEET NO.
55	0711.2R & 1011.1BR	COOK	741	483
		CONTRACT NO. 60999		
FED. ROAD DIST. NO. 1	ILLINOIS	FED. AID PROJECT		

12:57:39 PM
p:\01345\structur\C2 Central Ave. 016-0724\55f3f-amedt110.dgn
4/28/2011