STATE OF ILLINOIS
DEPARTMENT OF TRANSPORTATION

* As alternates to the bolted connection shown, the guide bars may be connected to the top bearing plate by groove welds or the guide bars and top bearing plate may be fabricated as a single piece.

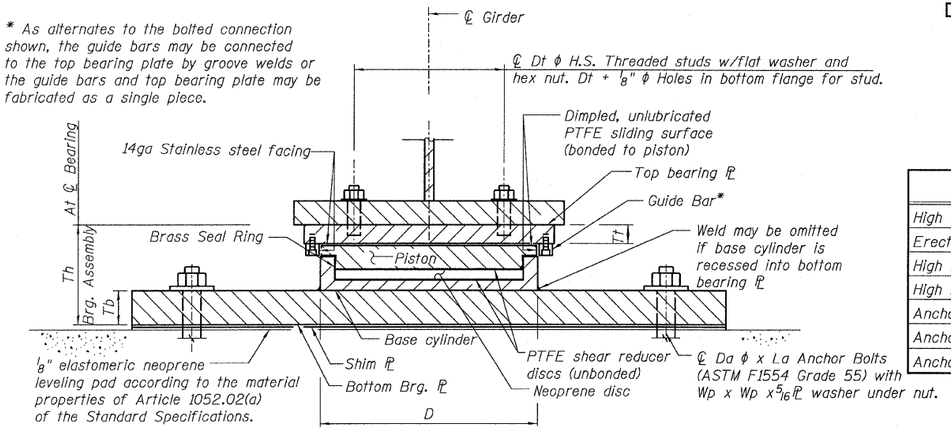

GUIDED EXPANSION HLMR BEARING

BILL OF MATERIAL

ITEM	UNIT	TOTAL
High Load Multi-Rotational Bearings, Guided Expansion, 150 kips (Erect Only)	EACH	40
Erecting High Load Multi-Rotational Bearings, Guided Expansion, 250 kips	EACH	40
High Load Multi-Rotational Bearings, Guided Expansion, 350 kips (Erect Only)	EACH	4
High Load Multi-Rotational Bearings, Guided Expansion, 900 kips (Erect Only)	EACH	4
Anchor Bolts, 1"	EACH	160
Anchor Bolts, 1 1/4"	EACH	8
Anchor Bolts, 1 1/2"	EACH	16

NOTES:

1. All structural steel for the top and bottom bearing plates shall conform to the requirements of AASHTO M 270 Grade 50, unless otherwise noted.
2. Anchor bolts shall be F1554, Gr. 55.
3. Top and bottom bearing plates, 1/8" elastomeric neoprene leveling pad, adjusting shims, threaded studs with washers and other items required for the bearing are furnished under a separate contract. Installation of these items in included in the cost of Erecting HLMR Bearings of the type specified.
4. Two 1/8" adjusting shims shall be provided for each bearing in addition to all other plates or shims and placed as shown on bearing details.
5. Top plate shall be beveled to match the slope of girder flanges. Work this sheet with top of steel elevation sheets.

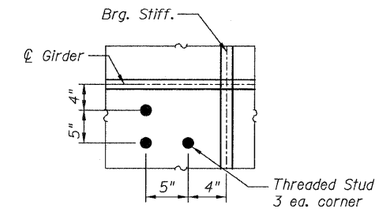

SKETCH "A"

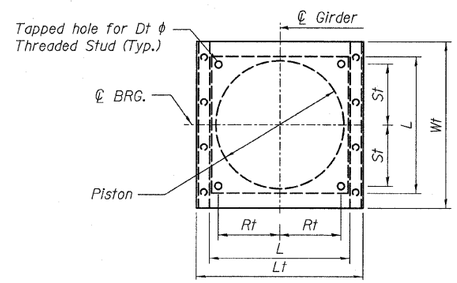

TOP BEARING PL - PISTON PLAN

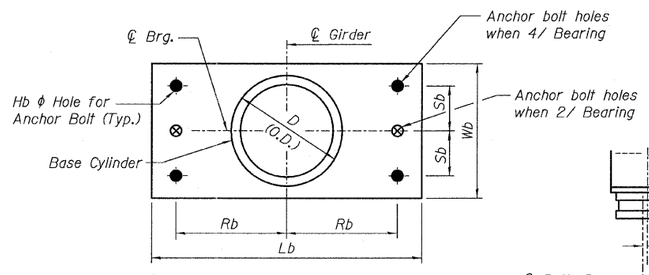

BOTTOM BEARING PL AND BASE CYLINDER PLAN

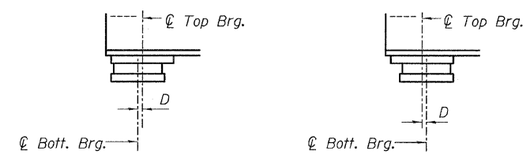

BELOW 50°F.
(Move bott. brg. away from fixed brg.)

ABOVE 50°F.
(Move bott. brg. toward fixed brg.)

SETTING ANCHOR BOLTS AT EXP. BRG.

D= 1/8" per each 100' of expansion for every 15° temp. change from the normal temp. of 50°F.

BEARING SCHEDULE

Type	Vertical Capacity (kips)	Lateral Capacity (kips)	Quantity Each	Location	Girders	Total Required Movement (in)	D (in)	L (in)	Th (in)	Top Plate / Bearing Assembly						Masonry Plate						Anchor Bolts			
										Wt (in)	Lt (in)	Tt (in)	Dt (in)	Rt (in)	St (in)	Wb (in)	Lb (in)	Tb (in)	Rb (in)	Sb (in)	Hb (in)	Qty per Brg.	Da (in)	La (in)	Wp (in)
HLMR Guided Expansion	150	15	36	C. Abut. 1 & 4	G3 - G20	3	9"	9"	5.796"	14"	13 1/2"	1 1/2"	3/4"	4"	4"	12"	21"	1"	8 3/4"		1 1/2"	2	1"	12"	2 1/4"
HLMR Guided Expansion	250	25	36	C. Abut. 2 & 3	G3 - G20	2	11 1/4"	11 1/4"	6.7897"	16 1/4"	16"	1 1/2"	3/4"	4"	4"	15"	24"	1 1/4"	10 1/4"		1 1/2"	2	1"	12"	2 1/4"
HLMR Guided Expansion	150	15	4	C. Abut. 1 & 4	G2 and G21	3	9"	9"	6.296"	14"	13 1/2"	1 1/2"	3/4"	4 1/2"	4 1/2"	12"	28"	1 1/2"	12 1/4"		1 1/2"	2	1"	12"	2 1/4"
HLMR Guided Expansion	250	25	4	C. Abut. 2 & 3	G2 and G21	2	11 1/4"	11 1/4"	7.2897"	16 1/4"	16 1/2"	1 1/2"	3/4"	4 1/2"	4 1/2"	15"	28"	1 3/4"	12 1/4"		1 1/2"	2	1"	12"	2 1/4"
HLMR Guided Expansion	350	50	4	C. Abut. 1 & 4	G1 and G22	3	13"	13"	8.593"	18"	19 1/2"	1 3/4"	1"	4 1/2"	4 1/2"	16"	34"	2 1/4"	14 3/4"		1 3/4"	2	1 1/4"	12"	2 3/4"
HLMR Guided Expansion	900	150	4	C. Abut. 2 & 3	G1 and G22	2	20 1/4"	20 1/4"	12.1582"	25 1/4"	28 1/8"	3"	1"	Sketch A		24"	36"	2 1/4"	15 1/4"	9 1/4"	2"	4	1 1/2"	18"	3"

SHIM PLATE THICKNESS TABLE

(Provided in addition to 1/8" adjusting shims)

Bearing Location	Beam		
	G9	G11	G17
C. Abutment 1, N. Brg.	5/8"	1/2"	--
C. Abutment 4, S. Brg.	--	--	1/8"

HIGH LOAD MULTI-ROTATIONAL BEARINGS GUIDED EXPANSION STRUCTURE NO. 016-0724

TY·LIN INTERNATIONAL

DESIGNED	EKH, PK
CHECKED	AMD,
DRAWN	EKH, PK
CHECKED	AMD,
DATE	03/25/2011

REVISIONS	
NAME	DATE

SHEET NO. 191
239 SHEETS

F.A.I RTE.	SECTION	COUNTY	TOTAL SHEETS	SHEET NO.
55	0711.2R & 1011.1BR	COOK	741	515
		CONTRACT NO. 60999		
FED. ROAD DIST. NO. 1	ILLINOIS	FED. AID PROJECT		

p:\01345\structur\C2 Central Ave. 016-0724\55c2guided.dgn 12:58:27 PM

4/28/2011