: 07:51:57 08/15/2003

F.A.I. RTE.	SECTION	COUNTY	TOTAL SHEETS	SHEET NO.
90/94	2003-0812	COOK	976	401
STA.	TO STA.			
FED. ROAD DIST. NO.	ILLINOIS	FED. AID PROJECT		

62583

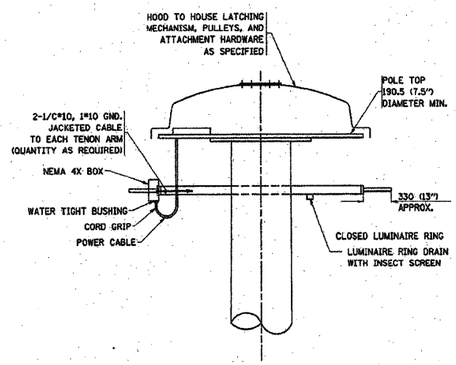

DETAIL-"D"

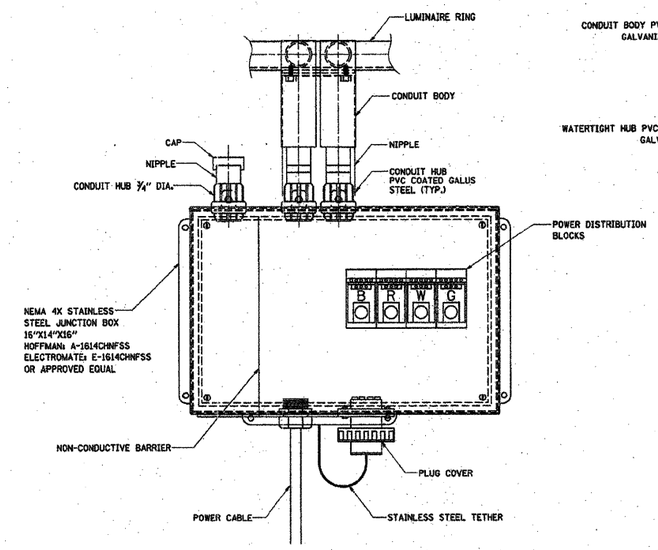

FRONT VIEW

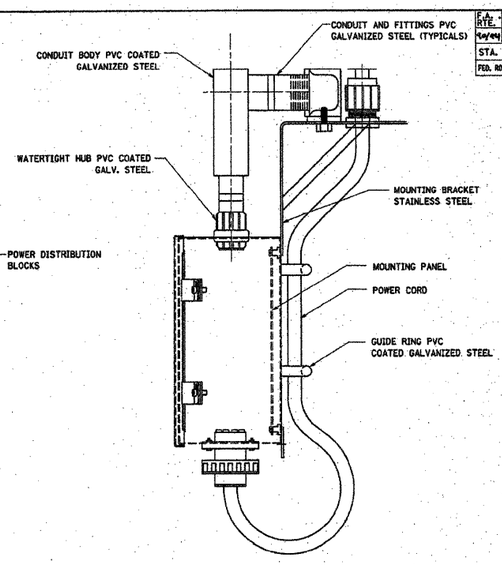

SIDE VIEW

LUMINAIRE RING TERMINAL BOX

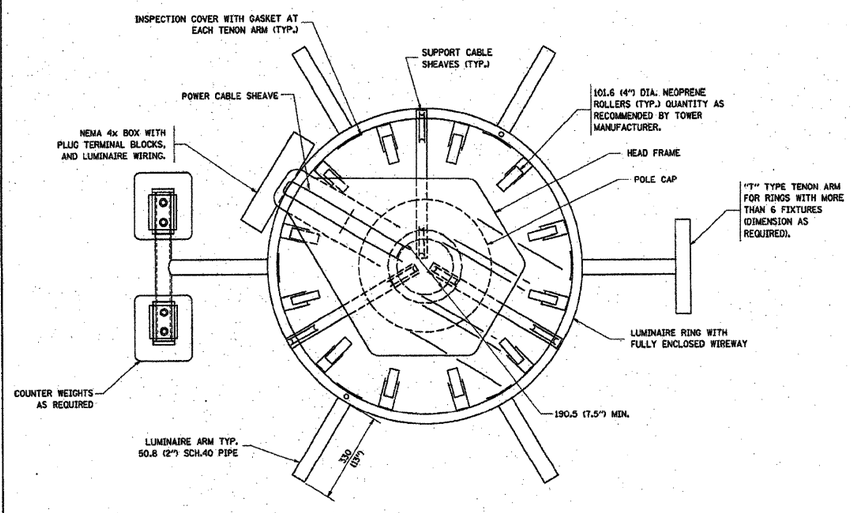

SECTION A-A

NOTES:

1. LUMINAIRE WIRES SHALL EXTEND 609 MM (24 INCHES) LONGER THAN THEIR RESPECTIVE TENON ARM AND SHALL BE TRAINED BACK INTO THE ARM WHICH SHALL THEN BE CLOSED WITH A CAP AS SPECIFIED. ALL WIRES SHALL BE CAPPED WITH HEAT SHRINK INSULATING BOOTS, CRIMP CAPS ARE UNACCEPTABLE. ALL RING WIRES SHALL BE TAGGED WITH WIRE MARKERS AT BOTH ENDS. THE TENON ARMS SHALL ALSO BE TAGGED CORRESPONDING TO THE WIRING CONTAINED WITHIN.
2. SPLICING WILL NOT BE ALLOWED WITHIN THE LUMINAIRE RING.
3. ALL TOWER SHAFT HARDWARE, SUCH AS GROUND LUGS, JUNCTION BOXES, HARDWARE FOR THE HANDHOLE DOOR, INCLUDING THE HANDLE/LATCH MECHANISM, HINGE AND DOOR STOP, SHALL BE STAINLESS STEEL. ALL CONDUIT AND CONDUIT FITTINGS SHALL BE PVC COATED GALVANIZED STEEL.
4. ALL MULTI-CONDUCTOR CABLES SHALL BE FITTED WITH A HEAT-SHRINK MULTI-LEG BOOT. THE BOOT SHALL MEET MILITARY SPECIFICATION MIL-I-81765/1.

E-500

REVISIONS NAME	DATE

ILLINOIS DEPARTMENT OF TRANSPORTATION

HIGH MAST LIGHT TOWER
27m TO 36m (90FT TO 120FT)
SHEET 2 OF 3

SCALE: VERT. HORIZ. NONE
DATE
DRAWN BY
CHECKED BY

08/15/2003
whdlstsh\e500.dgn
V7-BE500

REVISION DATE: 08/04/03

FOR INFORMATION ONLY

(Sheet 2 of 3)

LIN ENGINEERING, LTD.
Consulting Engineers
Chatham, Illinois

USER NAME =	DESIGNED - MTH	REVISED -
FILE NAME =	CHECKED - ADB	REVISED -
PLOT SCALE =	DRAWN - AJF	REVISED -
PLOT DATE =	CHECKED - MTH	REVISED -

STATE OF ILLINOIS
DEPARTMENT OF TRANSPORTATION

TOWER DETAILS
6POP2, 6POP4, & 5RMN5

F.A.I. RTE.	SECTION	COUNTY	TOTAL SHEETS	SHEET NO.
90/94	2011-021-L	COOK	19	14
		CONTRACT NO. 60P16		
	ILLINOIS	FED. AID PROJECT		