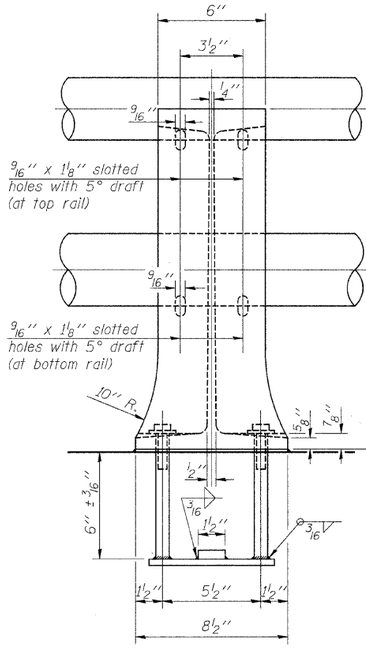

VIEW B-B

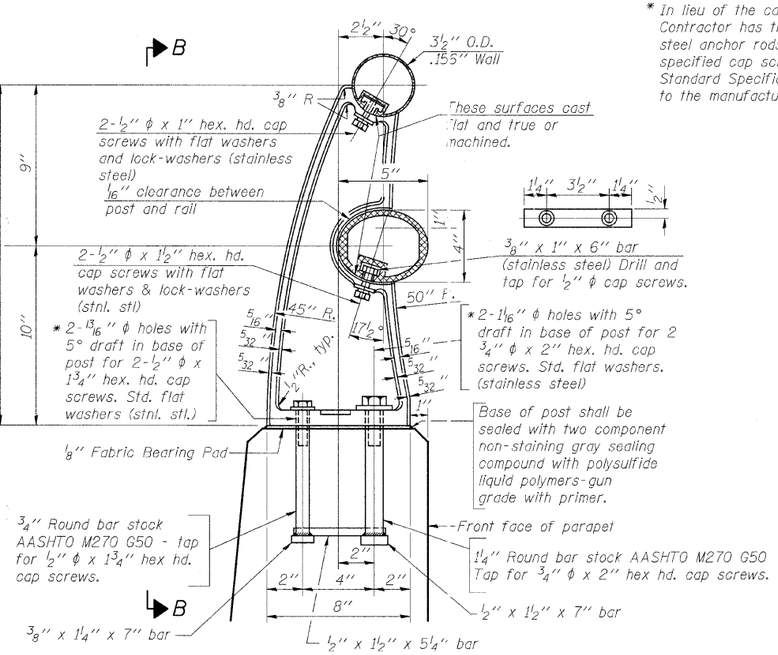

SECTION A-A

RAIL POST DETAILS

* In lieu of the cast-in-place anchor device shown, the Contractor has the option of drilling and setting stainless steel anchor rods of the same diameter and grade as the specified cap screws according to Article 509.06 of the Standard Specifications. Embedment shall be according to the manufacturer's specifications.

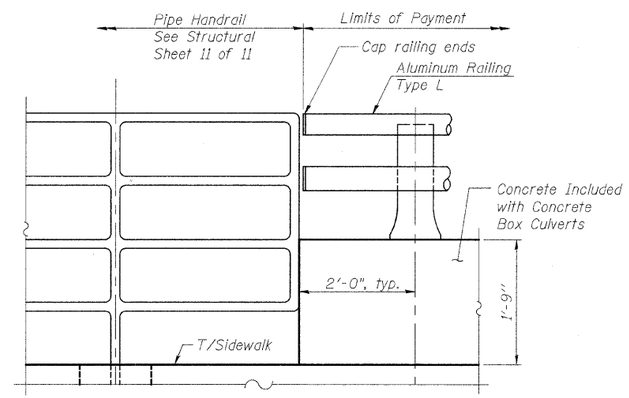

RAIL END TREATMENT AT PIPE HANDRAIL

Typ., each quadrant of culvert

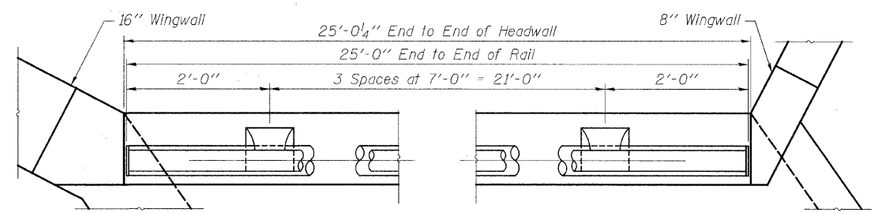

RAIL POST SPACING

Typ., East and West Rail

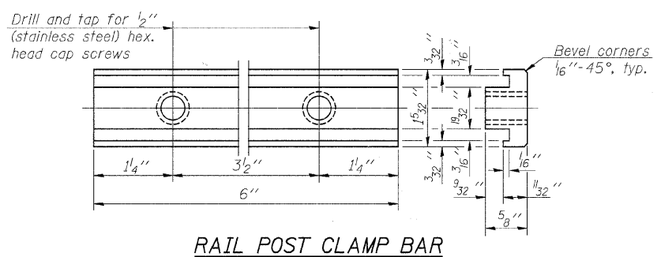

RAIL POST CLAMP BAR

For Top Rail

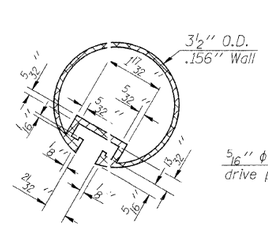

SECTION THRU TOP RAIL

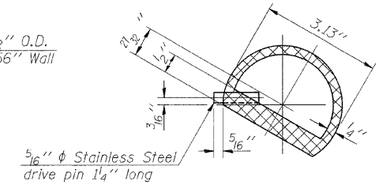

SECTION THRU SPLICE

For Top Rail

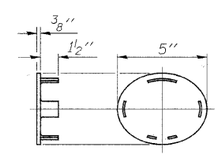

CAST END CAP

For Bottom Rail
DRIVE FIT TYPE

NOTE:

Materials, construction, and installation shall be in accordance with Section 509 of the Standard Specifications for Road and Bridge Construction.

All Posts shall be normal to parapet.

All joints in rail shall be spliced per detail.

All exposed rail ends shall be capped per detail.

Provide 1-⅛" and 2-1/16" Aluminum Shims for 25% of the Posts. Rail elements shall be parallel to Grade-high spots will be ground and low spots shimmed.

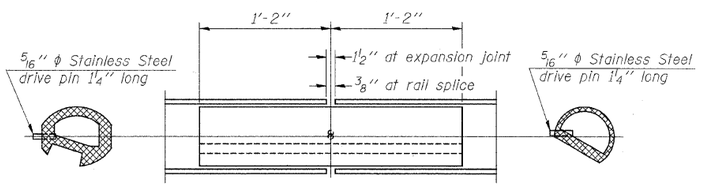

BOTTOM RAIL

RAIL SPLICE

TOP RAIL

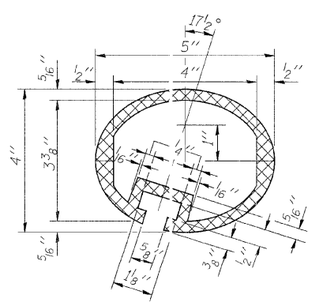

SEC. THRU ELLIPTICAL RAIL SECTION

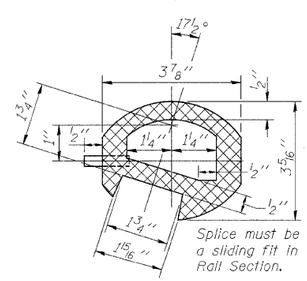

SEC. THRU SPLICE

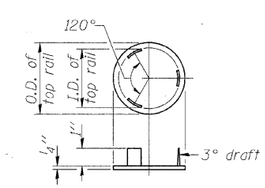

CAST END CAP

For Top Rail

BILL OF MATERIAL

Item	Unit	Quantity
Aluminum Railing, Type L	Foot	50

FILE NAME = S:\PROJECTS\2010\1201D10_Barney\drpht1\DESIGN\STRUCT\1201D10_09 Aluminum Railing.dgn

USER NAME =	DESIGNED - PETER PASCUA	REVISED -	
	CHECKED - BRIAN CONVERSE	REVISED -	
PLOT SCALE =	DRAWN - RON ALLEN	REVISED -	
PLOT DATE =	CHECKED - BRIAN CONVERSE	REVISED -	

ILLINOIS DEPARTMENT OF TRANSPORTATION
BARNEY DRIVE OVER TRIBUTARY OF ROCK RUN
STATION 20+00

ALUMINUM RAILING, TYPE L
STRUCTURE NO. 099-6474

STRUCTURAL SHEET NO. 9 OF 11 SHEETS

F.A.U. RTE.	SECTION	COUNTY	TOTAL SHEETS	SHEET NO.
0330	08-00413-00-BR	WILL	33	23
	WHA# 1201D10	CONTRACT NO. 63571		
		ILLINOIS FED. AID PROJECT BRM-9003(162)		