87+3 = (90)

F.A.P. RTE.	SECTION	COUNTY	TOTAL SHEETS	SHEET NO.
361	06-00214-27-BR	KANE	87	1
FED. ROAD DIST. NO. 1	ILLINOIS	CONTRACT NO. 63595		

06-17-11 LETTING ITEM 214

STATE OF ILLINOIS
DEPARTMENT OF TRANSPORTATION
DIVISION OF HIGHWAYS

PLANS FOR PROPOSED FEDERAL AID HIGHWAY

FAP ROUTE 361 (STEARNS ROAD, STAGE 5B)
UMBDENSTOCK ROAD OVER THE CC&P RAILROAD
BRIDGE REPLACEMENT
SECTION 06-00214-27-BR
PROJECT HPP-1527 (035)
KANE COUNTY
C-91-142-11

IMPROVEMENT LOCATED IN THE VILLAGE OF SOUTH ELGIN.

INDEX OF SHEETS

1	COVER SHEET
2	GENERAL NOTES
3-8	SUMMARY OF QUANTITIES
9	TYPICAL SECTIONS
10-12	SCHEDULE OF QUANTITIES
13	ALIGNMENTS, TIES, AND BENCHMARKS
14-16	PLAN & PROFILE
17-19	STAGES OF CONSTRUCTION
20-23	LANDSCAPING, EROSION CONTROL, AND GRADING
24-25	STORM WATER POLLUTION PREVENTION PLAN
26-30	DRAINAGE AND UTILITIES
31	INTERSECTION GRADING PLAN AND JOINTING PLAN
32-33	PAVEMENT MARKING AND SIGNING
34-61	STRUCTURAL SHEETS
62	CONSTRUCTION DETAILS
63	BD-34, DETAILS FOR DEPRESSED CURB & GUTTER AND SHOULDER TREATMENT AT TBT TY 1 SPL
64	BD-51, BENCHING DETAIL FOR EMBANKMENT WIDENING
65	BD-52, DETAIL OF PAVEMENT SEPARATION JOINT FOR JOINTED PCC PAVEMENT AT INTERSECTIONS
66	TC-13, DISTRICT ONE TYPICAL PAVEMENT MARKINGS
67	TC-16, PAVEMENT MARKING LETTERS AND SYMBOLS FOR TRAFFIC STAGING
68	TC-22, ARTERIAL ROAD INFORMATION SIGN
69-73	CROSS SECTIONS - RANDALL ROAD
74-81	CROSS SECTIONS - STEARNS ROAD
82-87	CROSS SECTIONS - UMBDENSTOCK ROAD

HIGHWAY STANDARDS

000001 -06	STANDARD SYMBOLS, ABBREVIATIONS AND PATTERNS
001001 -02	AREAS OF REINFORCEMENT BARS
280001 -05	TEMPORARY EROSION CONTROL SYSTEMS
420001 -07	PAVEMENT JOINTS
420106 -04	36' (10.8 m) JOINTED PCC PAVEMENT
420401 -08	BRIDGE APPROACH PAVEMENT CONNECTOR
421001 -02	BAR REINFORCEMENT FOR CRC PAVEMENT
421106 -08	36' (10.8 m) CRC PAVEMENT
424001 -05	CURB RAMPS FOR SIDEWALK
602011 -02	CATCH BASIN TYPE C
602406 -04	MANHOLE TYPE A 6' DIAMETER
604071 -04	FRAME AND GRATE TYPE 20
604091 -02	FRAME AND GRATE TYPE 24
606001 -04	CONCRETE CURB TYPE B AND COMBINATION CONCRETE CURB AND GUTTER
606301 -04	PC CONCRETE ISLANDS AND MEDIANS
630001 -09	STEEL PLATE BEAM GUARDRAIL
631011 -07	TRAFFIC BARRIER TERMINAL, TYPE 2
631031 -09	TRAFFIC BARRIER TERMINAL, TYPE 6
635011 -02	REFLECTOR MARKER AND MOUNTING DETAILS
667101 -01	PERMANENT SURVEY MARKERS
701301 -04	LANE CLOSURE, 2L, 2W, SHORT TIME OPERATION
701306 -03	LANE CLOSURE, 2L, 2W, SLOW MOVING OPERATIONS DAY ONLY, FOR SPEEDS >=45 MPH
701501 -06	URBAN LANE CLOSURE 2L 2W UNDIVIDED
701701 -07	URBAN LANE CLOSURE, MULTILANE INTERSECTION
701901 -01	TRAFFIC CONTROL DEVICES
720001 -01	SIGN PANEL MOUNTING DETAILS
720006 -02	SIGN PANEL ERECTION DETAIL
780001 -02	TYPICAL PAVEMENT MARKINGS

END IMPROVEMENT
UMBDENSTOCK ROAD
STA. 706+42.0

STRUCTURE NO.
045-3162

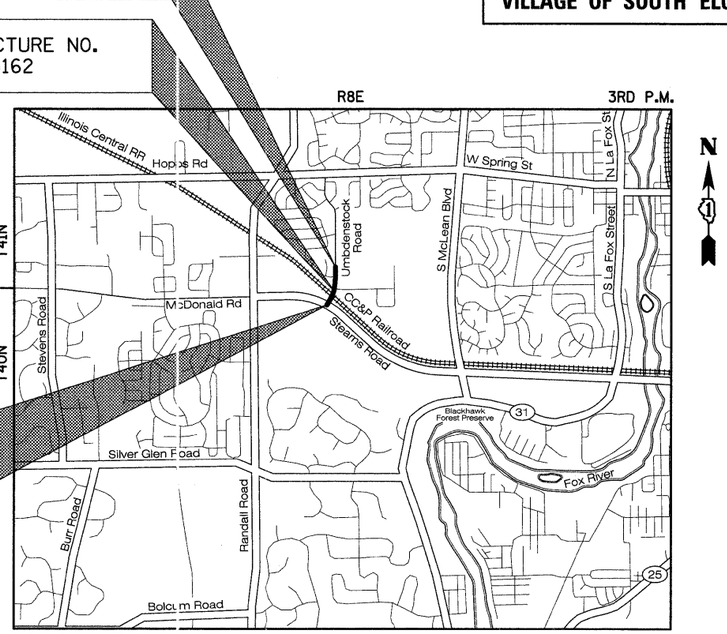

BEGIN IMPROVEMENT
UMBDENSTOCK ROAD
STA. 700+44.8

ELGIN TOWNSHIP
ST. CHARLES TOWNSHIP

LOCATION MAP
NOT TO SCALE

DESIGN DESIGNATION = LOCAL ROAD/STREET
POSTED SPEED = 30 MPH
2010 ADT = 6,100 VPD

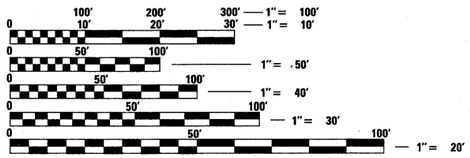

FULL SIZE PLANS HAVE BEEN PREPARED USING STANDARD ENGINEERING SCALES. REDUCED SIZED PLANS WILL NOT CONFORM TO STANDARD SCALES. IN MAKING MEASUREMENTS ON REDUCED PLANS, THE ABOVE SCALES MAY BE USED.

J.U.L.I.E.
JOINT UTILITY LOCATION INFORMATION FOR EXCAVATION
1-800-892-0123
OR 811

UMBDENSTOCK ROAD PROJECT LENGTH

GROSS LENGTH = 597.18 FT. = 0.113 MILE
NET LENGTH = 597.18 FT. = 0.113 MILE

CONTRACT NO. 63595

STATE OF ILLINOIS
DEPARTMENT OF TRANSPORTATION
DIVISION OF HIGHWAYS

APPROVED MARCH 23 20 11
DIRECTOR OF TRANSPORTATION /COUNTY ENGINEER, KANE COUNTY

PASSED APRIL 11 20 11
CHRISTOPHER HOLT
DISTRICT ONE ENGINEER OF LOCAL ROADS & STREETS

RELEASING FOR BID BASED ON LIMITED REVIEW APRIL 11, 20 11
Diane M. O'Keefe
DEPUTY DIRECTOR OF HIGHWAYS, REGION ONE ENGINEER

APPLIES TO SHEETS
34-61

STATE OF ILLINOIS
GREGORY J. HATLESTAD
081-005562
LICENSED STRUCTURAL ENGINEER
CHICAGO, IL

3/25/2011
REGISTERED S.E., STATE OF ILLINOIS EXPIRES 11/30/2012

APPLIES TO SHEETS
1-33; 62-87

REID T. MAGNER
062-056273
LICENSED PROFESSIONAL ENGINEER OF ILLINOIS

3/25/2011
REGISTERED P.E., STATE OF ILLINOIS EXPIRES 11/30/2011

PLANS PREPARED BY:

CIVILTECH
450 E. Devon Ave, Suite 300 - Itasca, Illinois 60143
Tel: 630.773.3900 - Fax: 630.773.3975
www.civiltechinc.com

PRINTED BY THE AUTHORITY OF THE STATE OF ILLINOIS

CONSULTANT ENGINEER: REID T. MAGNER, P.E. CIVILTECH ENGINEERING, INC.
PROGRAM AND OFFICE ENGINEER: CHARLES F. RIDDLE, P.E. 847-705-4406 SCHAUMBURG, IL

FINAL SURVEY	BY	DATE
NOTE BOOK	SURVEYED	
NO.	DRAWN	
	TEMPLATE	
	AREAS	
	AREAS CHECKED	

ORIGINAL SURVEY	BY	DATE
NOTE BOOK	SURVEYED	
NO.	DRAWN	
	TEMPLATE	
	AREAS	
	AREAS CHECKED	

GENERAL NOTES

GENERAL

1. ALL REFERENCES TO "ENGINEER" SHALL BE INTERPRETED TO MEAN THE RESIDENT ENGINEER.

2. ALL CONSTRUCTION SHALL BE DONE IN ACCORDANCE WITH THE DETAILS IN THE PLANS, THE SPECIAL PROVISIONS INCLUDED IN THE CONTRACT DOCUMENTS, AND THE LATEST EDITION OF THE FOLLOWING STATE OF ILLINOIS SPECIFICATIONS: "THE STANDARD SPECIFICATIONS FOR ROAD AND BRIDGE CONSTRUCTION" (REFERRED TO AS THE "STANDARD SPECIFICATIONS"), THE "SUPPLEMENTAL SPECIFICATIONS AND RECURRING SPECIAL PROVISIONS", THE "STANDARD SPECIFICATIONS FOR TRAFFIC CONTROL ITEMS", THE "MANUAL ON UNIFORM TRAFFIC CONTROL DEVICES FOR STREETS AND HIGHWAYS", THE "MANUAL OF TEST PROCEDURES FOR MATERIALS" AND THE "STANDARD SPECIFICATIONS FOR WATER AND SEWER MAIN CONSTRUCTION IN ILLINOIS". ANY REFERENCE TO "STANDARDS" THROUGHOUT THE PLANS OR SPECIAL PROVISIONS SHALL BE INTERPRETED AS THE LATEST I.D.O.T. STANDARD.

3. BEFORE STARTING ANY EXCAVATION, THE CONTRACTOR SHALL CALL "JULIE" AT 1-800-892-0123 FOR FIELD LOCATIONS OF BURIED UTILITIES (48 HOURS NOTIFICATION IS REQUIRED).

4. UTILITY COMPANIES, SCHOOL DISTRICTS, AND LOCAL POLICE AND FIRE DEPARTMENTS SHALL BE NOTIFIED BY THE CONTRACTOR AT LEAST 72 HOURS PRIOR TO THE START OF CONSTRUCTION.

5. NO WORK SHALL COMMENCE UNTIL TRAFFIC CONTROL REQUIREMENTS ARE MET TO THE SATISFACTION OF THE ENGINEER.

6. PROPOSED LINES AND GRADES SHOWN ON THE CONSTRUCTION PLANS REPRESENT FINISHED GRADE ELEVATIONS, UNLESS OTHERWISE NOTED.

7. THE CONTRACTOR SHALL SAW CUT PAVEMENT AND CURB & GUTTER TO SEPARATE THE EXISTING MATERIAL TO BE REMOVED BY MEANS OF AN APPROVED SAW TO A DEPTH AS SHOWN ON THE PLANS OR AS DIRECTED BY THE ENGINEER. THIS WORK SHALL BE CONSIDERED AS INCLUDED IN THE REMOVAL ITEM INVOLVED. THE COST OF ALL MATERIALS REQUIRED AND ALL LABOR NECESSARY TO COMPLY WITH THE ABOVE PROVISIONS WILL NOT BE PAID FOR SEPARATELY, BUT SHALL BE CONSIDERED AS INCLUDED IN THE UNIT BID PRICES OF THE CONTRACT, AND NO ADDITIONAL COMPENSATION WILL BE ALLOWED.

8. WHERE SECTION OR SUBSECTION MONUMENTS ARE ENCOUNTERED, THE ENGINEER SHALL BE NOTIFIED BEFORE SUCH MONUMENTS ARE REMOVED. THE CONTRACTOR SHALL CAREFULLY PRESERVE ALL PROPERTY MARKERS AND MONUMENTS UNTIL THE OWNER, AN AUTHORIZED SURVEYOR OR ANY AGENT HAS WITNESSED OR OTHERWISE REFERENCED EACH LOCATION.

9. ALL DIMENSIONS, INCLUDING RADII, ARE GIVEN TO THE EDGE OF PAVEMENT UNLESS OTHERWISE NOTED.

10. SHOULD THE CONTRACTOR DESIRE TO OBTAIN WATER FOR CONSTRUCTION PURPOSES FROM THE LOCAL AREA, THE CONTRACTOR WILL BE RESPONSIBLE FOR MAKING ARRANGEMENTS THROUGH THE VILLAGE OF SOUTH ELGIN. THE VILLAGE OF SOUTH ELGIN WILL INSTRUCT THE CONTRACTOR WHERE A POTABLE WATER SUPPLY FROM A HYDRANT NEAR THE WORK SITE IS LOCATED. THE VILLAGE SHALL METER THE POTABLE WATER USED BY THE CONTRACTOR AND THE CONTRACTOR WILL BE CHARGED FOR THE WATER USED AT THE VILLAGE RATES. THE CONTRACTOR IS RESPONSIBLE FOR THE TRANSPORTATION OF THE WATER TO THE SITE WHERE NEEDED. THE COST OF ALL MATERIALS REQUIRED AND ALL LABOR NECESSARY TO COMPLY WITH THE ABOVE PROVISIONS WILL NOT BE PAID FOR SEPARATELY, BUT SHALL BE CONSIDERED AS INCLUDED IN THE UNIT BID PRICES OF THE CONTRACT, AND NO ADDITIONAL COMPENSATION WILL BE ALLOWED.

11. IT IS THE CONTRACTOR'S SOLE RESPONSIBILITY TO COORDINATE WITH THE CHICAGO CENTRAL AND PACIFIC RAILROAD WHENEVER CONSTRUCTION ACTIVITY IS WITHIN 25 FEET OF THE RAILROAD ROW. THE CONTRACTOR SHALL RETAIN FLAGMEN EMPLOYED AND DESIGNATED BY THE CHICAGO CENTRAL AND PACIFIC RAILROAD TO MONITOR ON-COMING TRAIN TRAFFIC, AND ADVISE CONTRACTOR PERSONNEL WHEN ACTIVITY ON OR NEAR THE RAILROAD RIGHT-OF-WAY MAY PROCEED. THIS ITEM WILL BE PAID FOR ACCORDING TO ARTICLE 107.12 AND WILL BE REIMBURSED ACCORDING TO ARTICLE 109.05.

12. TEMPORARY TOILET - THE CONTRACTOR SHALL PROVIDE A TEMPORARY TOILET FACILITY FOR THE USE OF ALL CONTRACTORS' PERSONNEL EMPLOYED ON THE WORK, AND SHALL MAINTAIN SAME IN PROPER SANITARY CONDITION. AT COMPLETION, THE FACILITY SHALL BE REMOVED AND THE PREMISES LEFT CLEAN. THE ENGINEER SHALL APPROVE THE LOCATION OF THE TEMPORARY TOILET. THE COST OF THIS WORK SHALL BE INCLUDED IN THE UNIT PRICES BID AND NO ADDITIONAL COMPENSATION WILL BE ALLOWED.

13. IN ADDITION TO THE REQUIREMENTS OF THE SPECIAL PROVISION FOR CONSTRUCTION LAYOUT STAKES (ILLINOIS DEPARTMENT OF TRANSPORTATION CHECK SHEET #10), THE CONTRACTOR SHALL REESTABLISH, MONUMENT, AND TIE ALL CONTROL POINTS USED TO COMPLETE THE WORK AS SPECIFIED INCLUDING ALL PI'S, PC'S, PT'S, AND POT'S. THE TYPE OF MONUMENTATION USED WILL BE PK NAILS, IRON PIPES, RR SPIKES OR AS APPROVED BY THE ENGINEER.

14. WHEN REMOVING CURB AND GUTTER, PAVEMENT OR ANY OTHER STRUCTURE, THE CONTRACTOR SHALL TAKE EVERY PRECAUTION NECESSARY TO ENSURE THAT THERE WILL BE NO DAMAGE TO UNDERGROUND PUBLIC OR PRIVATE UTILITIES. UNDER NO CIRCUMSTANCES WILL THE USE OF A FROST BALL CONCRETE BREAKER BE ALLOWED.

15. DETECTABLE WARNINGS SHALL BE A CAST-IN-PLACE SYSTEM. STAMPED CONCRETE WILL NOT BE ALLOWED. THE COLOR OF THE DETECTABLE WARNING SURFACE SHALL BE BRICK RED. DETECTABLE WARNINGS SHALL BE CAST-IN-PLACE SYSTEMS MANUFACTURED BY DETECTABLE WARNING SYSTEMS, INC (EZ SET POLYMER CONCRETE PANEL), ARMOR TILE (CAST IN PLACE SYSTEMS), OR APPROVED EQUAL.

16. PROTECTIVE COAT SHALL BE APPLIED IN ALL CASES REGARDLESS OF THE CALENDAR DATE LIMITATIONS CONTAINED IN ARTICLE 420.18. THE PROTECTIVE COATING SHALL BE APPLIED TO THE EXPOSED SURFACES OF THE PORTLAND CEMENT CONCRETE PAVEMENT, CONCRETE SIDEWALK, AND CONCRETE CURB AND GUTTER. PORTLAND CEMENT CONCRETE CURING SHALL BE LIMITED TO METHODS SPECIFIED IN ARTICLE 1020.13 (A) (1), (2) AND (3).

17. THE THICKNESSES OF HOT-MIX ASPHALT MIXTURES SHOWN ON THE PLANS ARE NOMINAL. DEVIATIONS MAY OCCUR DUE TO IRREGULARITIES IN THE BINDER OR BASE UPON WHICH THE HOT-MIX ASPHALT MATERIALS ARE PLACED.

18. CONCRETE WASHOUT FACILITY SHOULD BE PROVIDED IN THE FIELD BY THE CONTRACTOR. THE COST OF CONCRETE WASHOUT FACILITY SHALL BE INCLUDED IN THE COST OF THE CONCRETE WORK ITEMS INCLUDED IN THE CONTRACT. THE COST OF ALL MATERIALS REQUIRED AND ALL LABOR NECESSARY TO COMPLY WITH THE ABOVE PROVISIONS WILL NOT BE PAID FOR SEPARATELY, BUT SHALL BE CONSIDERED AS INCLUDED IN THE UNIT BID PRICES OF THE CONTRACT, AND NO ADDITIONAL COMPENSATION WILL BE ALLOWED.

19. IF THE CONTRACTOR CHOOSES TO DISPOSE OF UNCONTAMINATED SOIL OR UNCONTAMINATED SOIL MIXED WITH CLEAN CONSTRUCTION AND DEMOLITION DEBRIS (CCDD) AT A CCDD FILL OPERATION, IT SHALL BE THE CONTRACTOR'S RESPONSIBILITY TO PERFORM ALL NECESSARY FIELD AND LABORATORY ANALYSIS AND TO OBTAIN THE LICENSED PROFESSIONAL ENGINEER'S CERTIFICATION REQUIRED AS PER PUBLIC ACT 96-1416 TO USE THE SITE. THE COST OF ALL MATERIALS REQUIRED AND ALL LABOR NECESSARY TO COMPLY WITH THE ABOVE PROVISIONS WILL NOT BE PAID FOR SEPARATELY, BUT SHALL BE CONSIDERED AS INCLUDED IN THE UNIT BID PRICES OF THE CONTRACT, AND NO ADDITIONAL COMPENSATION WILL BE ALLOWED.

20. THE CONTRACTOR SHALL PAY SPECIAL ATTENTION TO ARTICLE 201.01(a) OF THE STANDARD SPECIFICATIONS. REMOVAL OF ALL OBSTRUCTIONS IN THE RIGHT-OF-WAY, THAT ARE NOT INCLUDED IN A SPECIFIC REMOVAL ITEM, SHALL BE CONSIDERED CLEARING AND INCLUDED IN THE COST OF THE CONTRACT. THIS SHALL INCLUDE, BUT NOT LIMITED TO, FENCES, WALLS, FOUNDATIONS, BUILDINGS, ACCUMULATIONS OF RUBBISH OF WHATEVER NATURE, OLD TYPE III BARRICADES, OLD WATER HEATERS, OLD CMP PIPE, RUBBER TIRES, CONCRETE BLOCKS, DEAD MEN, METAL PARTS, ABANDONED WOODEN POWER POLES, GATES, AND ALL VEGETATION, TREES, SHRUBS, ETC. LESS THAN 6" IN DIAMETER.

STORM SEWERS, STRUCTURES, AND UTILITIES

21. THE CONTRACTOR SHALL COORDINATE CONSTRUCTION ACTIVITIES WITH UTILITY COMPANIES. THE LOCATION OF PUBLIC OR PRIVATE UTILITIES SHOWN ON THE PLANS ARE APPROXIMATE AND THE ENGINEER DOES NOT GUARANTEE THEIR ACCURACY. THE CONTRACTOR WILL BE REQUIRED TO ASCERTAIN THE EXACT LOCATION OF SUCH UTILITIES AND EXERCISE CARE DURING HIS CONSTRUCTION OPERATIONS SO AS NOT TO DAMAGE THEM IN ACCORDANCE WITH THE SPECIAL PROVISIONS AND APPLICABLE ARTICLES INCLUDED IN THE "STANDARD SPECIFICATIONS" INCLUDING, BUT NOT LIMITED TO, ARTICLES 105.07 AND 107.31. THE CONTRACTOR SHALL BE RESPONSIBLE FOR CONTACTING THE OWNERS OF ALL EXISTING UTILITIES SO THAT THEIR FACILITIES MAY BE LOCATED AND ADJUSTED OR MOVED, IF NECESSARY, PRIOR TO THE START OF THE CONSTRUCTION OPERATIONS. THE CONTRACTOR SHALL RECEIVE NO ADDITIONAL COMPENSATION FOR CONSTRUCTION STAGING NECESSARY TO ACCOMMODATE UTILITY RELOCATION OR ADJUSTMENT AND/OR FOR DELAYS CAUSED BY UTILITY RELOCATION OR ADJUSTMENT.

22. THE CONTRACTOR SHALL BE RESPONSIBLE FOR CONTACTING LOCAL AGENCIES MAINTAINING STORM & SANITARY SEWERS AND WATER MAINS TO VERIFY THE MATERIALS AND METHODS ALLOWED FOR THE ADJUSTMENT OR RELOCATION OF THEIR FACILITIES, IF NECESSARY.

23. THE STATION/OFFSET/ELEVATIONS NOTED FOR ALL DRAINAGE STRUCTURES LOCATED IN THE CURB LINE REFER TO THE POSITION OF THE ADJACENT PROPOSED EDGE OF PAVEMENT. THE CONTRACTOR SHALL BE RESPONSIBLE FOR DETERMINING THE OFFSET NECESSARY FOR EACH STRUCTURE TO SET THE FRAME AND GRATE IN THE PROPER LOCATION. ALL OTHER STRUCTURES ARE DIMENSIONED TO THE CENTER OF STRUCTURE.

24. FRAME ELEVATIONS GIVEN ON THE PLANS ARE ONLY TO ASSIST THE CONTRACTOR IN DETERMINING THE APPROXIMATE OVERALL HEIGHT OF THE STRUCTURE. THE ADJUSTMENT OF FRAMES ON ALL NEW STRUCTURES TO THE FINAL ELEVATIONS SHALL BE INCLUDED IN THE COST OF THE NEW STRUCTURES. THE COST OF ALL MATERIALS REQUIRED AND ALL LABOR NECESSARY TO COMPLY WITH THE ABOVE PROVISIONS WILL NOT BE PAID FOR SEPARATELY, BUT SHALL BE CONSIDERED AS INCLUDED IN THE UNIT BID PRICES OF THE CONTRACT, AND NO ADDITIONAL COMPENSATION WILL BE ALLOWED.

25. THE COST OF MAKING STORM SEWER CONNECTIONS TO EXISTING OR PROPOSED SEWER OR DRAINAGE STRUCTURES SHALL BE INCLUDED IN THE COST OF THE STORM SEWER BEING CONNECTED. ALL JOINTS IN CONCRETE SEWER PIPE SHALL BE SEALED WITH RUBBER GASKETS, PREFORMED JOINT SEALANTS, OR EXTERNAL SEALING BANDS. NO MASTIC JOINT SEALER WILL BE ALLOWED. THE COST OF ALL MATERIALS REQUIRED AND ALL LABOR NECESSARY TO COMPLY WITH THE ABOVE PROVISIONS WILL NOT BE PAID FOR SEPARATELY, BUT SHALL BE CONSIDERED AS INCLUDED IN THE UNIT BID PRICES OF THE CONTRACT, AND NO ADDITIONAL COMPENSATION WILL BE ALLOWED.

26. THE FRAMES AND LIDS OR FRAMES AND GRATES OF EXISTING INLETS, CATCH BASINS, MANHOLES, AND VALVE VAULTS WHICH ARE TO BE ABANDONED DUE TO THE CONSTRUCTION OF THIS IMPROVEMENT ARE THE PROPERTY OF THE VILLAGE OF SOUTH ELGIN AND SHALL BE DELIVERED TO THE PUBLIC WORKS DEPARTMENT, OR AS DIRECTED BY THE ENGINEER.

27. THE CONTRACTOR SHALL MAINTAIN FLOWS THROUGH EXISTING SEWER SYSTEMS AT ALL TIMES. THE EXISTING STRUCTURES SHALL BE INSPECTED BEFORE CONSTRUCTION STARTS. AS DIRECTED BY THE ENGINEER, ANY ACCUMULATION OF MATERIAL IN THE STRUCTURE DUE TO CONSTRUCTION OPERATIONS SHALL BE REMOVED BY THE CONTRACTOR AT HIS EXPENSE. THE COST OF ALL MATERIALS REQUIRED AND ALL LABOR NECESSARY TO COMPLY WITH THE ABOVE PROVISIONS WILL NOT BE PAID FOR SEPARATELY, BUT SHALL BE CONSIDERED AS INCLUDED IN THE UNIT BID PRICES OF THE CONTRACT, AND NO ADDITIONAL COMPENSATION WILL BE ALLOWED.

28. WHEN EXISTING DRAINAGE FACILITIES ARE DISTURBED, THE CONTRACTOR SHALL PROVIDE AND MAINTAIN TEMPORARY OUTLETS AND CONNECTIONS FOR ALL PRIVATE OR PUBLIC DRAINS, SEWERS OR STRUCTURES. HE SHALL PROVIDE FACILITIES TO TAKE IN ALL STORM WATER WHICH WILL BE RECEIVED BY THESE DRAINS AND SEWERS, AND DISCHARGE THE SAME. HE SHALL PROVIDE AND MAINTAIN AN EFFICIENT PUMPING PLANT, IF NECESSARY, AND A TEMPORARY OUTLET. HE SHALL BE PREPARED AT ALL TIMES TO DISPOSE OF TEMPORARY THE WATER RECEIVED FROM TEMPORARY CONNECTIONS UNTIL SUCH TIME AS THE PERMANENT CONNECTIONS WITH SEWERS ARE BUILT AND IN SERVICE. THE COST OF ALL MATERIALS REQUIRED AND ALL LABOR NECESSARY TO COMPLY WITH THE ABOVE PROVISIONS WILL NOT BE PAID FOR SEPARATELY, BUT SHALL BE CONSIDERED AS INCLUDED IN THE UNIT BID PRICES OF THE CONTRACT, AND NO ADDITIONAL COMPENSATION WILL BE ALLOWED.

29. THE CONTRACTOR SHALL FURNISH ALL LABOR, EQUIPMENT AND MATERIAL NECESSARY FOR DEWATERING TRENCH EXCAVATIONS AS WELL AS SHORING TRENCH WALLS DURING UTILITY OPERATIONS. THE COST OF ALL MATERIALS REQUIRED AND ALL LABOR NECESSARY TO COMPLY WITH THE ABOVE PROVISIONS WILL NOT BE PAID FOR SEPARATELY, BUT SHALL BE CONSIDERED AS INCLUDED IN THE UNIT BID PRICES OF THE CONTRACT, AND NO ADDITIONAL COMPENSATION WILL BE ALLOWED.

30. ANY PAVEMENT REMOVED AS PART OF UTILITY INSTALLATIONS SHALL BE REPLACED WITH PERMANENT PAVEMENT. TEMPORARY STONE SURFACE WILL NOT BE PERMITTED TO REMAIN OVERNIGHT WITHIN THE LIMITS OF LIVE TRAFFIC LANES. TEMPORARY HOT-MIX ASPHALT PATCHING AT THE CONTRACTOR'S EXPENSE MAY BE USED IN LIEU OF IMMEDIATE PAVEMENT REPLACEMENT. THE COST OF ALL MATERIALS REQUIRED AND ALL LABOR NECESSARY TO COMPLY WITH THE ABOVE PROVISIONS WILL NOT BE PAID FOR SEPARATELY, BUT SHALL BE CONSIDERED AS INCLUDED IN THE UNIT BID PRICES OF THE CONTRACT, AND NO ADDITIONAL COMPENSATION WILL BE ALLOWED.

31. EXISTING STORM SEWERS AND EXISTING STORM SEWER STRUCTURES SHALL BE CLEANED AS DIRECTED BY THE ENGINEER. A CONTINGENCY QUANTITY HAS BEEN INCLUDED IN THE CONTRACT.

32. ALL FRAMES WITH CLOSED LIDS TO BE FURNISHED AS PART OF THIS CONTRACT FOR CONSTRUCTION, ADJUSTMENT OR RECONSTRUCTION OF ANY MANHOLES, CATCH BASIN, INLET, VALVE VAULT, OR METER VAULT SHALL HAVE CAST INTO THE LID ONE OF THE FOLLOWING WORDS: ALL LIDS TO BE USED ON STORM SEWER STRUCTURES SHALL BEAR THE WORD "STORM". ALL LIDS TO BE USED ON SANITARY SEWER STRUCTURES SHALL BEAR THE WORD "SANITARY". ALL LIDS TO BE USED ON WATER SYSTEM STRUCTURES SHALL BEAR THE WORD "WATER". ALL OPEN GRATES SHALL INCLUDE THE WORDING "DUMP NO WASTE, DRAINS TO RIVER". THIS WORK SHALL BE CONSIDERED INCLUDED IN THE COST OF THE STRUCTURE BEING CONSTRUCTED, ADJUSTED OR RECONSTRUCTED. THE COST OF ALL MATERIALS REQUIRED AND ALL LABOR NECESSARY TO COMPLY WITH THE ABOVE PROVISIONS WILL NOT BE PAID FOR SEPARATELY, BUT SHALL BE CONSIDERED AS INCLUDED IN THE UNIT BID PRICES OF THE CONTRACT, AND NO ADDITIONAL COMPENSATION WILL BE ALLOWED.

33. THE CONTRACTOR SHALL BE AWARE THAT AT TIMES THE ENGINEER MAY REQUIRE A CHANGE IN STORM SEWER ELEVATION DUE TO A UTILITY LINE OR OTHER OBSTRUCTION. IF SUCH A GRADE CHANGE DOES NOT ALTER THE PIPE CLASSIFICATION, THE ADDITIONAL EXCAVATION OR SHEETING REQUIRED SHALL BE CONSIDERED AS INCLUDED IN THE COST OF THE STORM SEWER. HOWEVER, IF THE REVISED GRADE RESULTS IN A CHANGE IN PIPE CLASSIFICATION, PAYMENT WILL BE FOR THE REVISED TYPE OF STORM SEWER.

34. "DFW NON-SHEAR" COUPLINGS AS MANUFACTURED BY NDS COMPANY OR APPROVED EQUAL SHALL BE USED FOR CONNECTIONS OF NEW PIPE TO EXISTING PIPE, AND WHERE DISSIMILAR PIPE AND JOINT MATERIALS ARE ENCOUNTERED. COUPLINGS SHALL BE A MINIMUM OF 8 INCHES LONG FOR CONNECTIONS OF 4-INCH THROUGH 8-INCH PIPE AND A MINIMUM OF 12 INCHES LONG FOR CONNECTIONS ON LARGER PIPES (THESE ARE SPECIAL ORDER ITEMS). NO STAINLESS STEEL SHEAR RINGS WILL BE ALLOWED. THE COST OF ALL MATERIALS REQUIRED AND ALL LABOR NECESSARY TO COMPLY WITH THE ABOVE PROVISIONS WILL NOT BE PAID FOR SEPARATELY, BUT SHALL BE CONSIDERED AS INCLUDED IN THE UNIT BID PRICES OF THE CONTRACT, AND NO ADDITIONAL COMPENSATION WILL BE ALLOWED.

35. REMOVAL OF FLARED END SECTIONS SHALL BE PAID FOR AS "STORM SEWER REMOVAL."

36. FOR STORM SEWER CONSTRUCTED UNDER THE ROADWAY, BACKFILLING METHODS TWO AND THREE AUTHORIZED UNDER THE PROVISIONS OF ARTICLE 550.07 WILL NOT BE ALLOWED.

CURB AND GUTTER

37. THE TRANSITION FROM THE PROPOSED CURB AND GUTTER SECTION TO A FLAT OR DEPRESSED SECTION (WHERE THERE IS NO CONNECTION TO EXISTING CURB AND GUTTER) SHALL BE ACCOMPLISHED IN APPROXIMATELY FIVE FEET, AND WILL BE PAID FOR AS "COMBINATION CONCRETE CURB AND GUTTER" OF THE TYPE BEING CONSTRUCTED. THE COST OF ALL MATERIALS REQUIRED AND ALL LABOR NECESSARY TO COMPLY WITH THE ABOVE PROVISIONS WILL NOT BE PAID FOR SEPARATELY, BUT SHALL BE CONSIDERED AS INCLUDED IN THE UNIT BID PRICES OF THE CONTRACT, AND NO ADDITIONAL COMPENSATION WILL BE ALLOWED.

TREE REMOVAL, CLEARING AND HEDGE REMOVAL

38. ALL TREES ARE DESIGNATED TO BE SAVED UNLESS OTHERWISE NOTED ON THE PLANS, AND SHALL BE PROTECTED IN ACCORDANCE WITH THE PROVISIONS OF ARTICLE 201 OF THE STANDARD SPECIFICATIONS.

39. ALL CLEARING AND REMOVAL OF BUSHES, HEDGES AND TREES UNDER 6" IN DIAMETER SHALL BE INCLUDED IN THE COST OF "EARTH EXCAVATION".

40. AGGREGATE SHOULDER REMOVAL SHALL BE PAID FOR AS "REMOVAL AND DISPOSAL OF UNSUITABLE MATERIAL".

SIGNING, STRIPING & LANDSCAPING

41. SEE IDOT STANDARD 780001 AND PAVEMENT MARKING AND SIGNING SHEETS FOR DETAILS.

42. THE CONTRACTOR WILL BE REQUIRED TO RELOCATE OR REMOVE AND REPLACE SIGNS WHICH INTERFERE WITH HIS CONSTRUCTION OPERATIONS, AND TO TEMPORARILY RESET ALL SUCH SIGNS DURING CONSTRUCTION OPERATIONS. THIS WORK WILL BE INCLUDED IN THE UNIT BID PRICES OF THE CONTRACT'S TRAFFIC CONTROL ITEMS.

43. ALL UNUSED SIGNS SHALL BE RETURNED TO THE VILLAGE OF SOUTH ELGIN OR KANE COUNTY DIVISION OF TRANSPORTATION AT THE DIRECTION OF THE ENGINEER.

44. ANY SIGNS WHICH ARE DAMAGED BEYOND REPAIR DURING CONSTRUCTION OPERATIONS SHALL BE REPLACED IN KIND BY THE CONTRACTOR TO THE SATISFACTION OF THE ENGINEER AT NO ADDITIONAL COST TO THE CONTRACT.

45. WHEN DIRECTED BY THE ENGINEER, SUPPLEMENTAL WATERING SHALL BE APPLIED TO ALL SEEDED AREAS PRIOR TO FINAL ACCEPTANCE AT A RATE SPECIFIED BY THE ENGINEER AND IN ACCORDANCE WITH THE "STANDARD SPECIFICATIONS" AND SPECIAL PROVISIONS.

46. THE CONTRACTOR SHALL ADHERE TO LIMITS OF RESTORATION SHOWN. AREAS OUTSIDE THESE LIMITS THAT ARE DAMAGED OR DISTURBED BY THE CONTRACTOR, SHALL BE RESTORED BY THE CONTRACTOR AT HIS EXPENSE, AND NO ADDITIONAL COMPENSATION WILL BE ALLOWED.

47. TEMPORARY FENCE SHALL BE PLACED AROUND ALL TREES THAT ARE TO BE PROTECTED UNLESS OTHERWISE DIRECTED BY THE ENGINEER. SEE SPECIAL PROVISIONS FOR MORE DETAIL.

48. ALL NEW SIGNING WILL BE FURNISHED AND INSTALLED BY KANE COUNTY. SIGNS ON THE PROPOSED PAVEMENT MARKING AND SIGNING SHEET ARE FOR REFERENCE ONLY FOR KCDOT.

49. THE CONTRACTOR SHALL PROVIDE ACCESS TO ABUTTING PROPERTIES AT ALL TIMES DURING CONSTRUCTION, EXCEPT FOR PERIODS OF SHORT DURATION. THE COST TO PROVIDE AND MAINTAIN ACCESS SHALL BE PAID FOR AND INCLUDED IN THE ITEM "AGGREGATE FOR TEMPORARY ACCESS".

POINTS OF CONTACT:

KANE COUNTY DIVISION OF TRANSPORTATION
MR. MANNY GOMEZ
ASSISTANT DIRECTOR OF TRANSPORTATION
41W011 BURLINGTON ROAD
ST. CHARLES, IL 60175
PH: (630) 845-7873
FAX: (630) 584-5265
E-MAIL: GOMEZEMMANUEL@CO.KANE.IL.US

VILLAGE OF SOUTH ELGIN
MR. CHARLTON BEHM
735 MARTIN DRIVE
SOUTH ELGIN, IL 60177
PH: (847) 695-2742
E-MAIL: CBEHM@SOUTHELGIN.COM

CITY OF ELGIN
MR. JOE EVERS, P.E.
CITY ENGINEER
150 DEXTER COURT
ELGIN, IL 60121
PH: (847) 931-5955

COMMONWEALTH EDISON COMPANY
MR. JOHN PRIBICH
PROGRAM MANAGER, PUBLIC RELOCATION
THREE LINCOLN CENTER, 4TH FLOOR
OAKBROOK TERRACE, IL 60181-4260

COMCAST CABLE COMMUNICATIONS, INC.
MS. MARTHA GIERAS
DESIGN/DRAFTING DEPARTMENT
688 INDUSTRIAL DRIVE
ELMHURST, IL 60126

OTTER CREEK RECLAMATION DISTRICT
MR. BILL RICKERT
OTTER CREEK WRD
C/O RHMG ENGINEERS
975 CAMPUS DRIVE
MUNDELEIN, IL 60060
PH: (847)-362-5959
E-MAIL: WRICKERT@RHMG.COM

FOX RIVER WATER RECLAMATION DISTRICT
MR. RICK MANNER
DISTRICT ENGINEER
100 PURIFY DRIVE
ELGIN, IL 60121
PH: (847) 742-2068 EXT. 20
FAX: (847)742-0193
E-MAIL: RMANNER@FRWRD.COM

NICOR GAS
MS. CONSTANCE LANE
ENGINEERING ADMINISTRATOR
ENGINEERING #N7745
1844 FERRY ROAD
NAPERVILLE, IL 60563-9600
PH: (630) 388-3830
FAX: (630) 983-4028

AT&T
MR. DAVID SAINT GERMAIN
1000 COMMERCE DRIVE
OAK BROOK, IL 60523
PH: (815) 394-7297
E-MAIL: ds6585@att.com

ST. CHARLES CONSOLIDATED UNIT SCHOOL DISTRICT:
DR. DONALD SCHLOMANN
SUPERINTENDENT OF SCHOOLS
201 S. 7TH ST.
ST. CHARLES, IL 60174
PH: (630) 513-3030
FAX: (630) 513-5392
Donald.Schlomann@d303.org

SCHOOL DISTRICT U-46:
JOSE M. TORRES PH.D.
SUPERINTENDENT OF SCHOOLS
355 E. CHICAGO ST.
ELGIN, IL 60120
PH: (847) 888-5000 x5007
superintendent@u-46.org

SOUTH ELGIN POLICE DEPARTMENT:
CHRIS MERRITT
POLICE CHIEF
10 N WATER STREET
SOUTH ELGIN, IL 60177
PH: (847) 741-2151
FAX: (847) 888-0052

SOUTH ELGIN AND COUNTRYSIDE FIRE PROTECTION DISTRICT
JOSEPH CLUCHEY
FIRE CHIEF
150 W STATE STREET
SOUTH ELGIN, IL 60177
PH: (847) 741-2141
FAX: (847) 741-2184

CANADIAN NATIONAL RAILWAY
MR. PATRICK JONES
MANAGER PUBLIC WORKS
17641 S ASHLAND AVENUE
HOMEWOOD, IL 60430
PH: (708) 332-3557
FAX: (708) 332-3514
E-MAIL: PATRICK.JONES@CN.CA

CIVILTECH
450 E Devon Ave, Suite 300
Itasca, Illinois 60143
Tel: 630.773.3900 Fax: 630.773.3975
www.civiltechinc.com

DESIGNED - PK	REVISED -	
DRAWN - PK	REVISED -	
CHECKED - RTM	REVISED -	
DATE - 3/29/2011	REVISED -	

STATE OF ILLINOIS
DEPARTMENT OF TRANSPORTATION

N.T.S.

GENERAL NOTES

SHEET NO. 1 OF 1 SHEETS

F.A.P. RTE.	SECTION	COUNTY	TOTAL SHEETS	SHEET NO.
361	06-00214-27-BR	KANE	87	2
			CONTRACT NO. 63595	
FED. ROAD DIST. NO. 1	ILLINOIS	FED. AID PROJECT		

	CODED PAY ITEM NO.	PAY ITEM	UNIT	TOTAL QUANTITY	0001	0011
					ROADWAY	BRIDGE
	20100110	TREE REMOVAL (6 TO 15 UNITS DIAMETER)	UNIT	232	232	
	20100210	TREE REMOVAL (OVER 15 UNITS DIAMETER)	UNIT	18	18	
	20101000	TEMPORARY FENCE	FOOT	442	442	
^	20101200	TREE ROOT PRUNING	EACH	10	10	
^	20101300	TREE PRUNING (1 TO 10 INCH DIAMETER)	EACH	10	10	
^	20101350	TREE PRUNING (OVER 10 INCH DIAMETER)	EACH	10	10	
	20200100	EARTH EXCAVATION	CU YD	733	733	
	20201200	REMOVAL AND DISPOSAL OF UNSUITABLE MATERIAL	CU YD	2,680	2,680	
	20400800	FURNISHED EXCAVATION	CU YD	6,057	6,057	
	20800150	TRENCH BACKFILL	CU YD	47	47	
	21001000	GEOTECHNICAL FABRIC FOR GROUND STABILIZATION	SQ YD	4,228	4,228	
	21101615	TOPSOIL FURNISH AND PLACE, 4"	SQ YD	8,440	8,440	
	21101685	TOPSOIL FURNISH AND PLACE, 24"	SQ YD	590	590	
	25000210	SEEDING, CLASS 2A	ACRE	1.0	1.0	
	25000400	NITROGEN FERTILIZER NUTRIENT	POUND	177	177	
	25000600	POTASSIUM FERTILIZER NUTRIENT	POUND	177	177	
	25100115	MULCH, METHOD 2	ACRE	2.0	2.0	
	25100630	EROSION CONTROL BLANKET	SQ YD	9,030	9,030	
	25200200	SUPPLEMENTAL WATERING	UNIT	17	17	
*	28000200	EARTH EXCAVATION FOR EROSION CONTROL	CU YD	200	200	
	28000250	TEMPORARY EROSION CONTROL SEEDING	POUND	200	200	
*	28000305	TEMPORARY DITCH CHECKS	FOOT	64	64	
	28000500	INLET AND PIPE PROTECTION	EACH	7	7	
	28000510	INLET FILTERS	EACH	10	10	
	28100105	STONE RIPRAP, CLASS A3	SQ YD	349	349	
	28200200	FILTER FABRIC	SQ YD	419	419	
	31101180	SUBBASE GRANULAR MATERIAL, TYPE B 2"	SQ YD	10	10	

^ DENOTES SPECIALTY ITEM

^^ DENOTES CONSTRUCTION TYPE CODE 0042

* DENOTES SPECIAL PROVISION

FINAL SURVEY — NOTE BOOK — NO. — SURVEYED — PLOTTED — TEMPLATE — AREAS — AREAS CHECKED — BY — DATE

ORIGINAL SURVEY — NOTE BOOK — NO. — SURVEYED — PLOTTED — TEMPLATE — AREAS — AREAS CHECKED — BY — DATE

CIVILTECH
450 E Devon Ave, Suite 300
Itasca, Illinois 60143
Tel: 630.773.3900 Fax: 630.773.3975
www.civiltechinc.com

DESIGNED	- PK	REVISED	- 4/11/2011
DRAWN	- PK	REVISED	- 4/18/2011
CHECKED	- RTM	REVISED	-
DATE	- 3/25/2011	REVISED	-

STATE OF ILLINOIS
DEPARTMENT OF TRANSPORTATION

N.T.S.

SUMMARY OF QUANTITIES

F.A.P. RTE.	SECTION	COUNTY	TOTAL SHEETS	SHEET NO.
361	06-00214-27-BR	KANE	87	3
			CONTRACT NO. 63595	
FED. ROAD DIST. NO. 1	ILLINOIS	FED. AID PROJECT		

CODED PAY ITEM NO.	PAY ITEM	UNIT	TOTAL QUANTITY	0001	0011
				ROADWAY	BRIDGE
31102000	SUBBASE GRANULAR MATERIAL, TYPE C	CU YD	46	46	
35101800	AGGREGATE BASE COURSE, TYPE B 6"	SQ YD	84	84	
40600100	BITUMINOUS MATERIALS (PRIME COAT)	GALLON	345	345	
40603595	POLYMERIZED HOT-MIX ASPHALT SURFACE COURSE, MIX "F", N90	TON	9	9	
40702001	HOT-MIX ASPHALT PAVEMENT (FULL-DEPTH), 16"	SQ YD	688	688	
42000501	PORTLAND CEMENT CONCRETE PAVEMENT 10" (JOINTED)	SQ YD	1,438	1,438	
42001300	PROTECTIVE COAT	SQ YD	3,179	3,179	
42001420	BRIDGE APPROACH PAVEMENT CONNECTOR (PCC)	SQ YD	1,140	1,140	
42400200	PORTLAND CEMENT CONCRETE SIDEWALK 5 INCH	SQ FT	87	87	
42400800	DETECTABLE WARNINGS	SQ FT	20	20	
44000100	PAVEMENT REMOVAL	SQ YD	4,318	4,318	
44000157	HOT-MIX ASPHALT SURFACE REMOVAL, 2"	SQ YD	76	76	
44000500	COMBINATION CURB AND GUTTER REMOVAL	FOOT	1,080	1,080	
44000600	SIDEWALK REMOVAL	SQ FT	293	293	
44003100	MEDIAN REMOVAL	SQ FT	164	164	
48101500	AGGREGATE SHOULDERS, TYPE B 6"	SQ YD	195	195	
48203021	HOT-MIX ASPHALT SHOULDERS, 6"	SQ YD	355	355	
50100100	REMOVAL OF EXISTING STRUCTURES	EACH	1		1
50104650	SLOPE WALL REMOVAL	SQ YD	569		569
50157300	PROTECTIVE SHIELD	SQ YD	354		354
50200100	STRUCTURE EXCAVATION	CU YD	2,137		2,137
50300225	CONCRETE STRUCTURES	CU YD	159.4		159.4
50300255	CONCRETE SUPERSTRUCTURE	CU YD	321.4		321.4
50300260	BRIDGE DECK GROOVING	SQ YD	559		559
50300300	PROTECTIVE COAT	SQ YD	899		899
50400905	FURNISHING AND ERECTING PRECAST PRESTRESSED CONCRETE I-BEAMS, 42 IN.	FOOT	499		499
50800205	REINFORCEMENT BARS, EPOXY COATED	POUND	84,870		84,870

^ DENOTES SPECIALTY ITEM

^^ DENOTES CONSTRUCTION TYPE CODE 0042

* DENOTES SPECIAL PROVISION

FINAL SURVEY | NOTE BOOK | NO. | SURVEYED | PLOTTED | TEMPLATE | AREAS | AREAS CHECKED | BY | DATE

ORIGINAL SURVEY | NOTE BOOK | NO. | SURVEYED | PLOTTED | TEMPLATE | AREAS | AREAS CHECKED | BY | DATE

CIVILTECH
450 E Devon Ave, Suite 300
Itasca, Illinois 60143
Tel: 630.773.3900 Fax: 630.773.3975
www.civiltechinc.com

DESIGNED - PK	REVISED - 4/11/2011
DRAWN - PK	REVISED - 4/18/2011
CHECKED - RTM	REVISED -
DATE - 3/25/2011	REVISED -

STATE OF ILLINOIS
DEPARTMENT OF TRANSPORTATION

SUMMARY OF QUANTITIES

SHEET NO. 2 OF 6 SHEETS

F.A.P. RTE.	SECTION	COUNTY	TOTAL SHEETS	SHEET NO.
361	06-00214-27-BR	KANE	87	4
		CONTRACT NO. 63595		
FED. ROAD DIST. NO. 1	ILLINOIS	FED. AID PROJECT		

	CODED PAY ITEM NO.	PAY ITEM	UNIT	TOTAL QUANTITY	0001	0011
					ROADWAY	BRIDGE
	50800515	BAR SPLICERS	EACH	104		104
^	50901730	BRIDGE FENCE RAILING	FOOT	72		72
^	50901735	BRIDGE FENCE RAILING (SIDEWALK)	FOOT	171		171
^	50901750	PARAPET RAILING	FOOT	168		168
	51500100	NAME PLATES	EACH	1		1
	52000110	PREFORMED JOINT STRIP SEAL	FOOT	108		108
	52100010	ELASTOMERIC BEARING ASSEMBLY, TYPE I	EACH	7		7
	52100400	STEEL BEARING ASSEMBLY	EACH	7		7
	52100520	ANCHOR BOLTS, 1"	EACH	28		28
	550A0050	STORM SEWERS, CLASS A, TYPE 1 12"	FOOT	197	197	
	55100500	STORM SEWER REMOVAL 12"	FOOT	125	125	
	55100900	STORM SEWER REMOVAL 18"	FOOT	144	144	
^ *	56103000	DUCTILE IRON WATER MAIN 6"	FOOT	21	21	
^ *	56103300	DUCTILE IRON WATER MAIN 12"	FOOT	692	692	
^ *	56400500	FIRE HYDRANTS TO BE REMOVED	EACH	1	1	
^ *	56400820	FIRE HYDRANT WITH AUXILIARY VALVE AND VALVE BOX	EACH	2	2	
	58700300	CONCRETE SEALER	SQ FT	592		592
	60201310	CATCH BASINS, TYPE A, 4'-DIAMETER, TYPE 20 FRAME AND GRATE	EACH	1	1	
	60201340	CATCH BASINS, TYPE A, 4'-DIAMETER, TYPE 24 FRAME AND GRATE	EACH	2	2	
	60208210	CATCH BASINS, TYPE C, TYPE 20 FRAME AND GRATE	EACH	1	1	
	60223800	MANHOLES, TYPE A, 6'-DIAMETER, TYPE 1 FRAME, CLOSED LID	EACH	1	1	
	60237470	INLETS, TYPE A, TYPE 24 FRAME AND GRATE	EACH	3	3	
	60249010	VALVE VAULTS, TYPE A, 6'-DIAMETER, TYPE 1 FRAME, CLOSED LID	EACH	1	1	
	60250200	CATCH BASINS TO BE ADJUSTED	EACH	1	1	
	60252800	CATCH BASINS TO BE RECONSTRUCTED	EACH	1	1	
	60255500	MANHOLES TO BE ADJUSTED	EACH	4	4	
	60257900	MANHOLES TO BE RECONSTRUCTED	EACH	1	1	

^ DENOTES SPECIALTY ITEM

^^ DENOTES CONSTRUCTION TYPE CODE 0042

* DENOTES SPECIAL PROVISION

FINAL SURVEY — NOTE BOOK — NO. — SURVEYED — PLOTTED — TEMPLATE — AREAS — AREAS CHECKED — BY — DATE

ORIGINAL SURVEY — NOTE BOOK — NO. — SURVEYED — PLOTTED — TEMPLATE — AREAS — AREAS CHECKED — BY — DATE

CIVILTECH
450 E Devon Ave, Suite 300
Itasca, Illinois 60143
Tel: 630.773.3900 Fax: 630.773.3975
www.civiltechinc.com

DESIGNED - PK	REVISED - 4/11/2011
DRAWN - PK	REVISED - 4/18/2011
CHECKED - RTM	REVISED -
DATE - 3/25/2011	REVISED -

STATE OF ILLINOIS
DEPARTMENT OF TRANSPORTATION

SUMMARY OF QUANTITIES

SHEET NO. 3 OF 6 SHEETS

F.A.P. RTE.	SECTION	COUNTY	TOTAL SHEETS	SHEET NO.
361	06-00214-27-BR	KANE	87	5
		CONTRACT NO. 63595		
FED. ROAD DIST. NO. 1	ILLINOIS	FED. AID PROJECT		

	CODED PAY ITEM NO.	PAY ITEM	UNIT	TOTAL QUANTITY	0001	0011
					ROADWAY	BRIDGE
	60260100	INLETS TO BE ADJUSTED	EACH	1	1	
	60262700	INLETS TO BE RECONSTRUCTED	EACH	1	1	
	60402210	GRATES, TYPE 8	EACH	2	2	
	60500050	REMOVING CATCH BASINS	EACH	1	1	
	60500060	REMOVING INLETS	EACH	2	2	
	60605000	COMBINATION CONCRETE CURB AND GUTTER, TYPE B-6.24	FOOT	1,418	1,418	
	60620000	CONCRETE MEDIAN, TYPE SB-6.24	SQ FT	483	483	
^	63000001	STEEL PLATE BEAM GUARD RAIL, TYPE A,6 FOOT POSTS	FOOT	248	248	
^	63100045	TRAFFIC BARRIER TERMINAL, TYPE 2	EACH	1	1	
^	63100085	TRAFFIC BARRIER TERMINAL, TYPE 6	EACH	4	4	
^*	63100167	TRAFFIC BARRIER TERMINAL, TYPE 1 (SPECIAL) TANGENT	EACH	2	2	
	63200310	GUARDRAIL REMOVAL	FOOT	91	91	
	66400305	CHAIN LINK FENCE, 6'	FOOT	81	81	
	66600105	FURNISHING AND ERECTING RIGHT OF WAY MARKERS	EACH	8	8	
	66700205	PERMANENT SURVEY MARKERS, TYPE I	EACH	3	3	
	67000400	ENGINEER'S FIELD OFFICE, TYPE A	CAL MO	12	12	
	67100100	MOBILIZATION	L SUM	1	1	
	70106800	CHANGEABLE MESSAGE SIGN	CAL MO	7	7	
	70300100	SHORT-TERM PAVEMENT MARKING	FOOT	158	158	
	70300220	TEMPORARY PAVEMENT MARKING- LINE 4"	FOOT	532	532	
	70300510	PAVEMENT MARKING TAPE, TYPE III - LETTERS AND SYMBOLS	SQ FT	219	219	
	70300520	PAVEMENT MARKING TAPE, TYPE III 4"	FOOT	6,419	6,419	
	70301000	WORK ZONE PAVEMENT MARKING REMOVAL	SQ FT	334	334	
^	78000100	THERMOPLASTIC PAVEMENT MARKING - LETTERS AND SYMBOLS	SQ FOOT	73	73	
^	78000200	THERMOPLASTIC PAVEMENT MARKING - LINE 4"	FOOT	759	759	
^	78000400	THERMOPLASTIC PAVEMENT MARKING - LINE 6"	FOOT	400	400	
^	78008200	POLYUREA PAVEMENT MARKING TYPE I - LETTERS AND SYMBOLS	SQ FT	292	292	

^ DENOTES SPECIALTY ITEM

^^ DENOTES CONSTRUCTION TYPE CODE 0042

* DENOTES SPECIAL PROVISION

FINAL SURVEY — NOTE BOOK NO. — SURVEYED — PLOTTED — TEMPLATE — AREAS — AREAS CHECKED — BY — DATE

ORIGINAL SURVEY — NOTE BOOK NO. — SURVEYED — PLOTTED — TEMPLATE — AREAS — AREAS CHECKED — BY — DATE

CIVILTECH
450 E Devon Ave, Suite 300
Itasca, Illinois 60143
Tel: 630.773.3900 Fax: 630.773.3975
www.civiltechinc.com

DESIGNED - PK	REVISED - 4/11/2011
DRAWN - PK	REVISED - 4/18/2011
CHECKED - RTM	REVISED -
DATE - 3/25/2011	REVISED -

STATE OF ILLINOIS
DEPARTMENT OF TRANSPORTATION

SUMMARY OF QUANTITIES

SHEET NO. 4 OF 6 SHEETS

F.A.P. RTE.	SECTION	COUNTY	TOTAL SHEETS	SHEET NO.
361	06-00214-27-BR	KANE	87	6
		CONTRACT NO. 63595		
FED. ROAD DIST. NO. 1	ILLINOIS	FED. AID PROJECT		

	CODED PAY ITEM NO.	PAY ITEM	UNIT	TOTAL QUANTITY	0001	0011
					ROADWAY	BRIDGE
^	78008210	POLYUREA PAVEMENT MARKING TYPE I - LINE 4"	FOOT	3,744	3,744	
^	78008230	POLYUREA PAVEMENT MARKING TYPE I - LINE 6"	FOOT	823	823	
^	78008240	POLYUREA PAVEMENT MARKING TYPE I - LINE 8"	FOOT	139	139	
^	78008250	POLYUREA PAVEMENT MARKING TYPE I - LINE 12"	FOOT	210	210	
^	78008270	POLYUREA PAVEMENT MARKING TYPE I - LINE 24"	FOOT	49	49	
^ *	78200420	GUARDRAIL MARKERS, TYPE B	EACH	21	21	
^ *	78201000	TERMINAL MARKER - DIRECT APPLIED	EACH	2	2	
	78300100	PAVEMENT MARKING REMOVAL	SQ FT	2,215	2,215	
^ *	85000200	MAINTENANCE OF EXISTING TRAFFIC SIGNAL INSTALLATION	EACH	1	1	
^	87301305	ELECTRIC CABLE IN CONDUIT, LEAD-IN, NO 14 1 PAIR	FOOT	500	500	
^	88500100	INDUCTIVE LOOP DETECTOR	EACH	1	1	
^	88600100	DETECTOR LOOP, TYPE I	FOOT	128	128	
^ *	89502380	REMOVE EXISTING HANDHOLE	EACH	1	1	
*	X0322919	CLEAN EXISTING STRUCTURES	EACH	2	2	
*	X0324044	EROSION CONTROL, TEMPORARY PIPE SLOPE DRAIN	EACH	4	4	
*	X0324045	SEDIMENT CONTROL, STABILIZED CONSTRUCTION ENTRANCE REMOVAL	EACH	2	2	
*	X0324775	SEDIMENT CONTROL, STABILIZED CONSTRUCTION ENTRANCE MAINTENANCE	SQ YD	384	384	
*	X0325110	BIAXIAL GEOGRID	SQ YD	1,581	1,581	
^ *	X5610650	WATER MAIN, ABANDONED	L SUM	1	1	
^ *	X0326712	ABANDON AND FILL EXISTING SANITARY SEWER	EACH	1	1	
*	X0326749	AIR RELEASE VALVE MANHOLE	EACH	1	1	
*	X0327139	AGGREGATE COLUMN GROUND IMPROVEMENT	L SUM	1		1
*	X2070304	POROUS GRANULAR EMBANKMENT, SPECIAL	CU YD	723		723
*	X2130010	EXPLORATION TRENCH, SPECIAL	FOOT	100	100	
*	X2511630	EROSION CONTROL BLANKET (SPECIAL)	SQ YD	197	197	
*	X5539700	STORM SEWERS TO BE CLEANED	FOOT	50	50	
^ *	X5610712	WATER MAIN REMOVAL, 12"	FOOT	155	155	

^ DENOTES SPECIALTY ITEM

^^ DENOTES CONSTRUCTION TYPE CODE 0042

* DENOTES SPECIAL PROVISION

FINAL SURVEY — NOTE BOOK — NO. — SURVEYED — PLOTTED — TEMPLATE — AREAS — AREAS CHECKED — BY — DATE

ORIGINAL SURVEY — NOTE BOOK — NO. — SURVEYED — PLOTTED — TEMPLATE — AREAS — AREAS CHECKED — BY — DATE

CIVILTECH
450 E Devon Ave, Suite 300
Itasca, Illinois 60143
Tel: 630.773.3900 Fax: 630.773.3975
www.civiltechinc.com

DESIGNED	- PK	REVISED	- 4/11/2011
DRAWN	- PK	REVISED	- 4/18/2011
CHECKED	- RTM	REVISED	-
DATE	- 3/25/2011	REVISED	-

STATE OF ILLINOIS
DEPARTMENT OF TRANSPORTATION

SUMMARY OF QUANTITIES

F.A.P. RTE.	SECTION	COUNTY	TOTAL SHEETS	SHEET NO.
361	06-00214-27-BR	KANE	87	7
		CONTRACT NO. 63595		
FED. ROAD DIST. NO. 1	ILLINOIS	FED. AID PROJECT		

	CODED PAY ITEM NO.	PAY ITEM	UNIT	TOTAL QUANTITY	0001	0011
					ROADWAY	BRIDGE
*	X6060200	CONCRETE MEDIAN, TYPE SB-6.24 (MODIFIED)	SQ FT	464	464	
*	X7010216	TRAFFIC CONTROL AND PROTECTION, (SPECIAL)	L SUM	1	1	
*	XX003536	CONNECTION TO EXISTING WATER MAINS (NON PRESSURE)	EACH	2	2	
*	XX003668	PRECONSTRUCTION VIDEO TAPING	L SUM	1	1	
^ *	XX005855	WATER MAIN CASING PIPE	FOOT	308	308	
^ *	XX006247	SANITARY SEWER REMOVAL	FOOT	155	155	
*	XX006658	FLOCCULATION LOGS	EACH	30	30	
*	XX006659	FLOCCULATION POWDER	POUND	20	20	
*	XX006698	TREE PROTECTION AND PRESERVATION	EACH	8	8	
*	XX006701	SEEDING, CLASS 4 (MODIFIED) MESIC PRAIRIE	ACRE	1.0	1.0	
*	XX006709	SEEDING, CLASS 5 (MODIFIED) MESIC PRAIRIE	ACRE	1.0	1.0	
*	Z0001050	AGGREGATE SUBGRADE 12"	SQ YD	3,992	3,992	
*	Z0013796	SEDIMENT CONTROL, STABILIZED CONSTRUCTION ENTRANCE	SQ YD	384	384	
*	Z0013798	CONSTRUCTION LAYOUT	L SUM	1	1	
*	Z0019600	DUST CONTROL WATERING	UNIT	6	6	
*	Z0023202	SEDIMENT CONTROL, DRAINAGE STRUCTURE INLET FILTER CLEANING	EACH	15	15	
*	Z0023204	SEDIMENT CONTROL, SILT FENCE	FOOT	2,418	2,418	
*	Z0023206	SEDIMENT CONTROL, SILT FENCE MAINTENANCE	FOOT	2,418	2,418	
*	Z0030850	TEMPORARY INFORMATION SIGNING	SQ FT	78	78	
*	Z0034210	MECHANICALLY STABILIZED EARTH RETAINING WALL	SQ FT	5,514		5,514
*	Z0042002	POROUS GRANULAR EMBANKMENT, SUBGRADE	CU YD	2,153	2,153	
*	Z0048665	RAILROAD PROTECTIVE LIABILITY INSURANCE	L SUM	1	1	
^ *	Z0058000	SANITARY SEWER, SPECIAL	FOOT	728	728	
*	Z0062456	TEMPORARY PAVEMENT	SQ YD	556	556	
*	Z0073345	SLEEPER SLAB	FOOT	90	90	
* ^^	Z0076600	TRAINEES	HOUR	1,000	1,000	
*	XX008538	SANITARY SEWER CASING PIPE	FOOT	257	257	

^ DENOTES SPECIALTY ITEM

^^ DENOTES CONSTRUCTION TYPE CODE 0042

* DENOTES SPECIAL PROVISION

FINAL SURVEY — NOTE BOOK NO. — SURVEYED — PLOTTED — TEMPLATE — AREAS — AREAS CHECKED — BY — DATE

ORIGINAL SURVEY — NOTE BOOK NO. — SURVEYED — PLOTTED — TEMPLATE — AREAS — AREAS CHECKED — BY — DATE

CIVILTECH
450 E Devon Ave, Suite 300
Itasca, Illinois 60143
Tel: 630.773.3900 Fax: 630.773.3975
www.civiltechinc.com

DESIGNED - PK		REVISED - 4/11/2011
DRAWN - PK		REVISED - 4/18/2011
CHECKED - RTM		REVISED -
DATE - 3/25/2011		REVISED -

STATE OF ILLINOIS
DEPARTMENT OF TRANSPORTATION

SUMMARY OF QUANTITIES

SHEET NO. 6 OF 6 SHEETS

F.A.P. RTE.	SECTION	COUNTY	TOTAL SHEETS	SHEET NO.
361	06-00214-27-BR	KANE	87	8
		CONTRACT NO. 63595		
FED. ROAD DIST. NO. 1	ILLINOIS	FED. AID PROJECT		

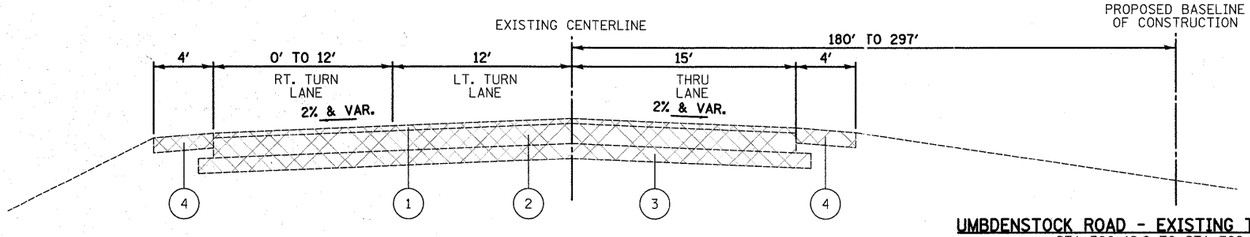

UMBDENSTOCK ROAD - EXISTING TYPICAL SECTION
STA 700+19.9 TO STA 702+22.0
(BRIDGE OMISSION STA 702+22.0 TO STA 703+65.4)

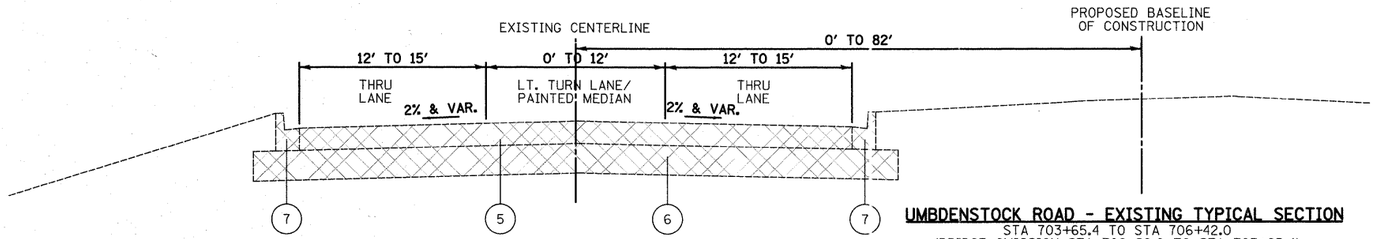

UMBDENSTOCK ROAD - EXISTING TYPICAL SECTION
STA 703+65.4 TO STA 706+42.0
(BRIDGE OMISSION STA 702+22.0 TO STA 703+65.4)

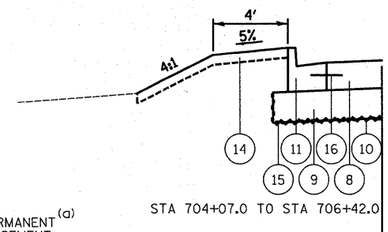

STA 704+07.0 TO STA 706+42.0

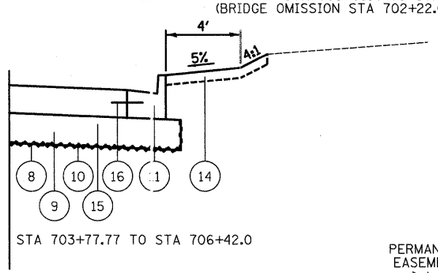

STA 703+77.77 TO STA 706+42.0

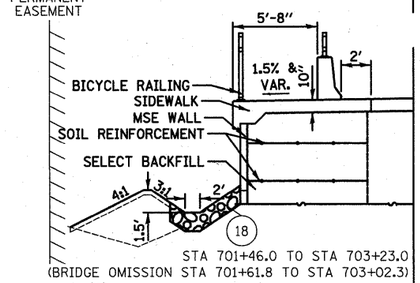

STA 701+46.0 TO STA 703+23.0
(BRIDGE OMISSION STA 701+61.8 TO STA 703+02.3)

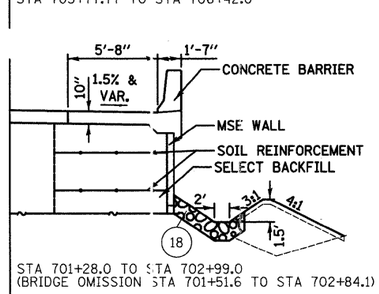

STA 701+28.0 TO STA 702+99.0
(BRIDGE OMISSION STA 701+51.6 TO STA 702+84.1)

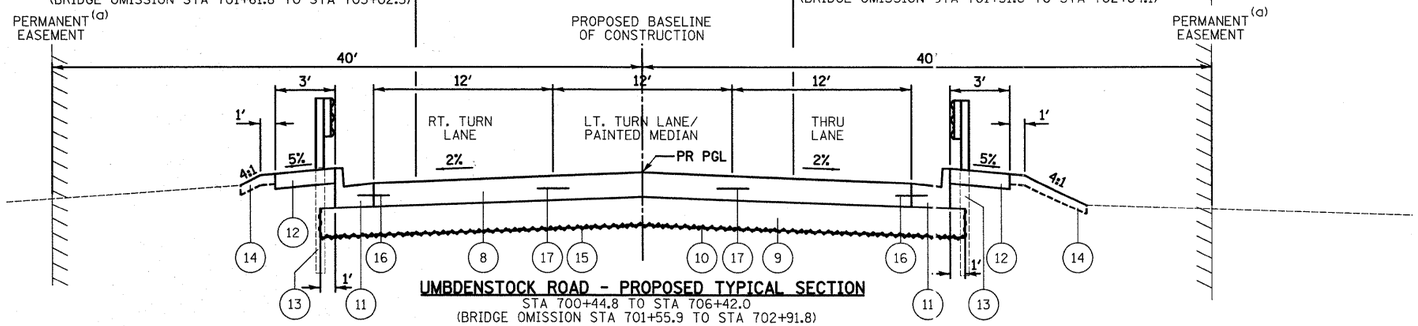

UMBDENSTOCK ROAD - PROPOSED TYPICAL SECTION
STA 700+44.8 TO STA 706+42.0
(BRIDGE OMISSION STA 701+55.9 TO STA 702+91.8)

NOTES:
(a) PERMANENT EASEMENT ACROSS CC&P RAILROAD AND COMED STA 700+84.1 TO STA 704+19.9

LEGEND

1. EXISTING HOT-MIX ASPHALT SURFACE COURSE, MIX "F", N50, 2" TO 10"
2. EXISTING HOT-MIX ASPHALT, 8" TO 12"
3. EXISTING AGGREGATE BASE 8" TO 12"
4. EXISTING AGGREGATE SHOULDERS, TYPE B 6"

(1) - (4): CONSTRUCTED AS TEMPORARY PAVEMENT - FALL 2010

5. EXISTING HOT-MIX ASPHALT, 3" TO 12-1/2"
6. EXISTING AGGREGATE BASE, 5" TO 19"
7. EXISTING COMBINATION CONCRETE CURB AND GUTTER, TYPE B-6.12
8. PROPOSED PORTLAND CEMENT CONCRETE PAVEMENT 10" (JOINTED)
9. PROPOSED AGGREGATE SUBGRADE 12"
10. PROPOSED GEOTECHNICAL FABRIC FOR GROUND STABILIZATION
11. PROPOSED COMBINATION CONCRETE CURB AND GUTTER, TYPE B-6.24
12. PROPOSED HOT-MIX ASPHALT SHOULDERS, 6"
13. PROPOSED TRAFFIC BARRIER POSTS WITH SONOTUBES (FURNISHING AND INSTALLING SONOTUBES INCLUDED IN THE COST OF TRAFFIC BARRIERS)
14. PROPOSED TOPSOIL FURNISH AND PLACE, 4"
15. PROPOSED BIAXIAL GEOGRID (TO BE INSTALLED BELOW AGGREGATE SUBGRADE, 12" - STA. 700+44.8 TO STA. 704+52.7)
16. PROPOSED 24" LONG NO. 6 EPOXY COATED TIE BARS AT 24" C-C (INCLUDED IN THE COST OF PORTLAND CEMENT CONCRETE PAVEMENT, 10" (JOINTED))
17. PROPOSED 30" LONG NO. 6 EPOXY COATED TIE BARS AT 24" C-C (INCLUDED IN THE COST OF PORTLAND CEMENT CONCRETE PAVEMENT, 10" (JOINTED))
18. PROPOSED STONE RIPRAP, CLASS A3 AND FILTER FABRIC

REMOVAL

SOIL NOTES: (GEOTECHNICAL REPORT PREPARED BY TESTING SERVICE CORP. AND DATED NOVEMBER 20, 2006)

1. THE FOUR BORINGS PERFORMED ADJACENT TO THE ABUTMENT WALLS INDICATE THAT THE CLAY SOILS HAVING DEFICIENT STRENGTH VALUES EXTEND TO WELL BELOW THE PROPOSED FOOTER ELEVATION. THE CONTRACTORS PROVIDING THE MSE WALLS AND GROUND IMPROVEMENT MUST ALSO PROVIDE THEIR FINAL ANALYSIS FOR INTERNAL AND EXTERNAL STABILITY OF THEIR DESIGN.

2. ONE OF THE SOIL BORINGS ENCOUNTERED FREE GROUNDWATER WHILE DRILLING AT A DEPTH OF ONLY 2.0 FEET WITHIN THE COHESIVE FILL SOIL, WITH THE REMAINING BORINGS BEING "DRY" DURING THE DRILLING OPERATION. IT SHOULD BE EXPECTED THAT EXCAVATIONS FOR THE LEVELING PAD WILL ENCOUNTER GROUNDWATER SEEPAGE DURING CONSTRUCTION. THE CONTRACTOR SHOULD BE PREPARED TO DEWATER THESE ACCUMULATIONS.

3. GROUND SHALL BE IMPROVED TO ADEQUATELY SUPPORT MSE WALLS, ABUTMENTS, AND ROADWAY. IMPROVEMENTS SHALL SATISFY LONG TERM SETTLEMENT REQUIREMENTS OF LESS THAN 1 INCH.

4. POROUS GRANULAR EMBANKMENT, SUBGRADE (PGES) HAS BEEN PROVIDED FOR SOILS THAT ARE UNSTABLE WHEN WET. THE NEED FOR REMOVAL AND REPLACEMENT WITH PGES WILL BE DETERMINED IN THE FIELD AT THE TIME OF CONSTRUCTION BY THE ENGINEER (BY USE OF A CONE PENETROMETER IN CONJUNCTION WITH THE IDOT SUBGRADE MANUAL). IF UNSTABLE SOILS ARE ENCOUNTERED, THE SOILS SHALL BE REMOVED AND REPLACED WITH PGES. IF UNSTABLE SOILS ARE NOT ENCOUNTERED, THEN THE QUANTITY WILL BE DEDUCTED AND NO ADDITIONAL COMPENSATION WILL BE DUE THE CONTRACTOR.

HOT-MIX ASPHALT MIXTURE REQUIREMENTS	
MIXTURE TYPE	**AIR VOIDS @ Ndes**
SHOULDERS	
HOT-MIX ASPHALT SHOULDER (HMA BINDER IL-19 mm); 6" (IN 2 LIFTS)	2% @ 30 Gyr.
TEMPORARY PAVEMENT	
TEMP PAVEMENT (HMA BINDER IL-19mm), 8" (IN 3 LIFTS)	4% @ 50 Gyr.
FULL DEPTH PAVEMENT	
POLYMERIZED HOT-MIX ASPHALT SURFACE COURSE, MIX "F", N90 (IL 9.5mm), 2"	4% @ 90 Gyr.
POYMERIZED HOT-MIX ASPHALT BINDER COURSE, IL-19.0, N90, 14" (IN 4 LIFTS)	4% @ 90 Gyr.

THE "AC TYPE" FOR POLYMERIZED HMA MIXES SHALL BE "SBS/SBR PG-70-22" AND FOR NON-POLYMERIZED HMA THE "AC TYPE" SHALL BE "PG 64-22" UNLESS MODIFIED BY DISTRICT ONE SPECIAL PROVISIONS.

FOR "PERCENT OF RAP" SEE DISTRICT ONE SPECIAL PROVISIONS.

FINAL SURVEY / ORIGINAL SURVEY — NOTE BOOK — NO. — BY — DATE
SURVEYED — PLOTTED — TEMPLATE — AREAS — AREAS CHECKED

CIVILTECH
450 E Devon Ave, Suite 300
Itasca, Illinois 60143
Tel: 630.773.3900 Fax: 630.773.3975
www.civiltechinc.com

DESIGNED - PK	REVISED -	
DRAWN - PK	REVISED -	
CHECKED - RTM	REVISED -	
DATE - 3/29/2011	REVISED -	

STATE OF ILLINOIS
DEPARTMENT OF TRANSPORTATION

N.T.S.

TYPICAL SECTIONS

SHEET NO. 1 OF 1 SHEETS

F.A.P. RTE.	SECTION	COUNTY	TOTAL SHEETS	SHEET NO.
361	06-00214-27-BR	KANE	87	9
		CONTRACT NO. 63595		
FED. ROAD DIST. NO. 1	ILLINOIS	FED. AID PROJECT		

SCHEDULE OF EARTH QUANTITIES				
	EARTH EXCAVATION (20200100)	REMOVAL AND DISPOSAL OF UNSUITABLE MATERIAL (20201200)	POROUS GRANULAR EMBANKMENT, SUBGRADE (Z0042002)	FURNISHED EXCAVATION (20400800)
	(CU. FT.)	(CU. FT.)	(CU. FT.)	(CU. FT.)
SUBTOTAL RANDALL ROAD	3,619	10,676	0	7,672
SUBTOTAL STEARNS ROAD	1,200	1,150	0	800
SUBTOTAL UMBDENSTOCK ROAD	14,946	50,856	58,106	115,742
SUBTOTAL OLD UMBDENSTOCK ROAD	0	9,652	0	17,974
PROJECT SUBTOTAL (CU. FT.)	19,765	72,334	58,106	142,188
PROJECT SUBTOTAL (CU. YD.)	733	2,680	2,153	5,266
SHRINKAGE FACTOR ADJUSTMENT (15%)	-	-	-	x 1.15
PROJECT TOTAL (CU. YD.)	733	2,680	2,153	6,057
DENSITY FACTOR CONVERSION (2.00 TONS/CU. YD.)	-	-	x 2.00	-
PROJECT TOTAL (TONS)	-	-	4,306	-

STREET	SURFACE TYPE		EARTH EXCAVATION	UNSUITABLE AREA	POROUS GRANULAR EMBANKMENT, SUBGRADE	FURNISHED EXCAVATION (FILL)
		AREA	VOLUME	VOLUME	VOLUME	VOLUME
		(SQ FT)	(CU FT)	(CU FT)	(CU FT)	(CU FT)
OLD UMBDENSTOCK ROAD	EXISTING PAVEMENT	7,692	0	0	0	11,539
	EXISTING GRASS	9,652	0	9,652	0	6,435
		TOTAL:	**0**	**9,652**	**0**	**17,974**

SCHEDULE OF EARTH EXCAVATION AND FURNISHED EXCAVATION

STATION	DISTANCE	EARTH EXCAVATION (20200100) (SQ. FT.)	REMOVAL AND DISPOSAL OF UNSUITABLE MATERIAL (20201200) (SQ. FT.)	POROUS GRANULAR EMBANKMENT, SUBGRADE (Z0042002) (SQ. FT.)	FURNISHED EXCAVATION (FILL) (20400800) (SQ. FT.)	EARTH EXCAVATION (20200100) AVG. (SQ. FT.)	REMOVAL AND DISPOSAL OF UNSUITABLE MATERIAL (20201200) AVG. (SQ. FT.)	POROUS GRANULAR EMBANKMENT, SUBGRADE (Z0042002) AVG. (SQ. FT.)	FURNISHED EXCAVATION (20400800) AVG. (SQ. FT.)	EARTH EXCAVATION (20200100) (CU. FT.)	REMOVAL AND DISPOSAL OF UNSUITABLE MATERIAL (20201200) (CU. FT.)	POROUS GRANULAR EMBANKMENT, SUBGRADE (Z0042002) (CU. FT.)	FURNISHED EXCAVATION (20400800) (CU. FT.)
(XX+XX)	(FT.)												
RANDALL ROAD													
472+58		7	23	0	17								
	42					7	23	0	17	294	966	0	693
473+00		7	23	0	16								
	50					7	21	0	17	325	1,050	0	825
473+50		6	19	0	17								
	50					6	22	0	19	300	1,075	0	925
474+00		6	24	0	20								
	50					6	24	0	19	300	1,200	0	925
474+50		6	24	0	17								
	50					7	24	0	16	325	1,175	0	800
475+00		7	23	0	15								
	50					7	23	0	15	350	1,150	0	725
475+50		7	23	0	14								
	50					8	20	0	13	375	1,000	0	625
476+00		8	17	0	11								
	50					8	18	0	12	400	900	0	575
476+50		8	19	0	12								
	50					8	17	0	11	400	850	0	550
477+00		8	15	0	10								
	50					8	15	0	10	375	725	0	475
477+50		7	14	0	9								
	50					4	10	0	8	175	475	0	400
478+00		0	5	0	7								
	22					0	5	0	7	0	110	0	154
478+22		0	5	0	7								
									SUBTOTAL	3,619	10,676	0	7,672

FINAL SURVEY / ORIGINAL SURVEY — NOTE BOOK — NO. — SURVEYED — PLOTTED — TABULATE — AREAS — AREAS CHECKED — BY — DATE

CIVILTECH
450 E Devon Ave, Suite 300
Itasca, Illinois 60143
Tel: 630.773.3900 Fax: 630.773.3975
www.civiltechinc.com

DESIGNED - PK	REVISED -
DRAWN - PK	REVISED -
CHECKED - RTM	REVISED -
DATE - 3/25/2011	REVISED -

STATE OF ILLINOIS
DEPARTMENT OF TRANSPORTATION

N.T.S.

SCHEDULE OF QUANTITIES

SHEET NO. 1 OF 3 SHEETS

F.A.P. RTE.	SECTION	COUNTY	TOTAL SHEETS	SHEET NO.
361	06-00214-27-BR	KANE	87	10
		CONTRACT NO. 63595		
FED. ROAD DIST. NO. 1	ILLINOIS	FED. AID PROJECT		

SCHEDULE OF EARTH EXCAVATION AND FURNISHED EXCAVATION

STATION	DISTANCE	EARTH EXCAVATION	REMOVAL AND DISPOSAL OF UNSUITABLE MATERIAL	POROUS GRANULAR EMBANKMENT, SUBGRADE	FURNISHED EXCAVATION (FILL)	EARTH EXCAVATION	REMOVAL AND DISPOSAL OF UNSUITABLE MATERIAL	POROUS GRANULAR EMBANKMENT, SUBGRADE	FURNISHED EXCAVATION	EARTH EXCAVATION	REMOVAL AND DISPOSAL OF UNSUITABLE MATERIAL	POROUS GRANULAR EMBANKMENT, SUBGRADE	FURNISHED EXCAVATION
		(20200100)	(20201200)	(Z0042002)	(20400800)	(20200100)	(20201200)	(Z0042002)	(20400800)	(20200100)	(20201200)	(Z0042002)	(20400800)
(XX+XX)	(FT.)	(SQ. FT.)	(SQ. FT.)	(SQ. FT.)	(SQ. FT.)	AVG. (SQ. FT.)	AVG. (SQ. FT.)	AVG. (SQ. FT.)	AVG. (SQ. FT.)	(CU. FT.)	(CU. FT.)	(CU. FT.)	(CU. FT.)
						STEARNS ROAD							
452+50		0	0	0	0								
	50					5	6	0	0	250	275	0	0
453+00		10	11	0	0								
	50					8	9	0	1	400	450	0	25
453+50		6	7	0	1								
	50					5	6	0	2	225	300	0	75
454+00		3	5	0	2								
	50					2	3	0	3	75	125	0	125
454+50		0	0	0	3								
	50					0	0	0	3	0	0	0	150
455+00		0	0	0	3								
	50					0	0	0	3	0	0	0	150
455+50		0	0	0	3								
	50					0	0	0	3	0	0	0	125
456+00		0	0	0	2								
	50					0	0	0	2	0	0	0	75
456+50		0	0	0	1								
	50					0	0	0	1	0	0	0	50
457+00		0	0	0	1								
	50					1	0	0	1	25	0	0	25
457+50		1	0	0	0								
	50					2	0	0	0	75	0	0	0
458+00		2	0	0	0								
	50					2	0	0	0	100	0	0	0
458+50		2	0	0	0								
	50					1	0	0	0	50	0	0	0
459+00		0	0	0	0								
	50					0	0	0	0	0	0	0	0
459+50		0	0	0	0								
	50					0	0	0	0	0	0	0	0
460+00		0	0	0	0								
	50					0	0	0	0	0	0	0	0
460+50		0	0	0	0								
	50					0	0	0	0	0	0	0	0
461+00		0	0	0	0								
	50					0	0	0	0	0	0	0	0
461+50		0	0	0	0								
	50					0	0	0	0	0	0	0	0
462+00		0	0	0	0								
	50					0	0	0	0	0	0	0	0
462+50		0	0	0	0								
	50					0	0	0	0	0	0	0	0
463+00		0	0	0	0								
									SUBTOTAL	1,200	1,150	0	800

FINAL SURVEY — NOTE BOOK — NO. — SURVEYED — PLOTTED — DRAWN — AREAS — AREAS CHECKED — BY — DATE

ORIGINAL SURVEY — NOTE BOOK — NO. — SURVEYED — PLOTTED — DRAWN — AREAS — AREAS CHECKED — BY — DATE

CIVILTECH
450 E Devon Ave, Suite 300
Itasca, Illinois 60143
Tel: 630.773.3900 Fax: 630.773.3975
www.civiltechinc.com

DESIGNED - PK	REVISED -	
DRAWN - PK	REVISED -	
CHECKED - RTM	REVISED -	
DATE - 3/25/2011	REVISED -	

STATE OF ILLINOIS
DEPARTMENT OF TRANSPORTATION

SCHEDULE OF QUANTITIES

SHEET NO. 2 OF 3 SHEETS

F.A.P. RTE.	SECTION	COUNTY	TOTAL SHEETS	SHEET NO.
361	06-00214-27-BR	KANE	87	11
		CONTRACT NO. 63595		
FED. ROAD DIST. NO. 1	ILLINOIS	FED. AID PROJECT		

SCHEDULE OF EARTH EXCAVATION AND FURNISHED EXCAVATION

STATION	DISTANCE	EARTH EXCAVATION	REMOVAL AND DISPOSAL OF UNSUITABLE MATERIAL	POROUS GRANULAR EMBANKMENT, SUBGRADE	FURNISHED EXCAVATION (FILL)	EARTH EXCAVATION	REMOVAL AND DISPOSAL OF UNSUITABLE MATERIAL	POROUS GRANULAR EMBANKMENT, SUBGRADE	FURNISHED EXCAVATION	EARTH EXCAVATION	REMOVAL AND DISPOSAL OF UNSUITABLE MATERIAL	POROUS GRANULAR EMBANKMENT, SUBGRADE	FURNISHED EXCAVATION
		(20200100)	(20201200)	(Z0042002)	(20400800)	(20200100)	(20201200)	(Z0042002)	(20400800)	(20200100)	(20201200)	(Z0042002)	(20400800)
(XX+XX)	(FT.)	(SQ. FT.)	(SQ. FT.)	(SQ. FT.)	(SQ. FT.)	AVG. (SQ. FT.)	AVG. (SQ. FT.)	AVG. (SQ. FT.)	AVG. (SQ. FT.)	(CU. FT.)	(CU. FT.)	(CU. FT.)	(CU. FT.)
						UMBDENSTOCK ROAD							
457+00		0	0	0	0								
	50					0	12	0	6	0	575	0	300
457+50		0	23	0	12								
	50					26	27	0	18	1,275	1,325	0	875
458+00		51	30	0	23								
	50					53	15	0	28	2,650	750	0	1,375
458+50		55	0	0	32								
	50					28	31	0	36	1,375	1,525	0	1,775
459+00		0	61	0	39								
	50					0	66	0	101	0	3,300	0	5,050
459+50		0	71	0	163								
	50					0	71	0	198	0	3,550	0	9,900
460+00		0	71	0	233								
	50					2	62	0	225	75	3,100	0	11,225
460+50		3	53	0	216								
	50					3	57	145	108	150	2,825	7,250	5,400
461+00		3	60	290	0								
	50					3	70	171	121	150	3,475	8,550	6,050
461+50		3	79	52	242								
	50					2	42	26	121	75	2,075	1,300	6,050
462+00		0	4	0	0								
	50					0	4	0	0	0	200	0	0
462+50		0	4	0	0								
	50					0	4	0	0	0	200	0	0
463+00		0	4	0	0								
701+00		0	192	620	997								
	50					0	145	445	688	0	7,250	22,250	34,400
701+50		0	98	270	379								
	28					16	90	135	261	438	2,531	3,818	7,381
701+78		31	81	0	143								
	18					16	41	0	72	282	738	0	1,302
701+96		0	0	0	0								
	55					0	0	0	0	0	0	0	0
702+51		0	0	0	0								
	25					12	36	69	29	297	892	1,698	707
702+76		24	72	137	57								
	24					12	108	182	173	286	2,578	4,344	4,130
703+00		0	144	227	289								
	50					0	109	145	168	0	5,425	7,225	8,375
703+50		0	73	62	46								
	50					22	76	32	49	1,100	3,775	1,600	2,425
704+00		44	78	2	51								
	70					39	40	1	64	2,695	2,800	70	4,480
704+70		33	2	0	77								
	80					30	10	0	46	2,400	760	0	3,640
705+50		27	17	0	14								
	50					23	17	0	13	1,150	850	0	650
706+00		19	17	0	12								
	42					13	9	0	6	546	357	0	252
706+42		7	0	0	0								
									SUBTOTAL	14,946	50,856	58,106	115,742

FINAL SURVEY — NOTE BOOK — NO. — SURVEYED — PLOTTED — TYPED — AREAS — AREAS CHECKED — BY — DATE

ORIGINAL SURVEY — NOTE BOOK — NO. — SURVEYED — PLOTTED — TYPED — AREAS — AREAS CHECKED — BY — DATE

CIVILTECH
450 E Devon Ave, Suite 300
Itasca, Illinois 60143
Tel: 630.773.3900 Fax: 630.773.3975
www.civiltechinc.com

DESIGNED - PK	REVISED -	
DRAWN - PK	REVISED -	
CHECKED - RTM	REVISED -	
DATE - 3/25/2011	REVISED -	

STATE OF ILLINOIS
DEPARTMENT OF TRANSPORTATION

SCHEDULE OF QUANTITIES

SHEET NO. 3 OF 3 SHEETS

F.A.P. RTE.	SECTION	COUNTY	TOTAL SHEETS	SHEET NO.
361	06-00214-27-BR	KANE	87	12
		CONTRACT NO. 63595		
FED. ROAD DIST. NO. 1	ILLINOIS	FED. AID PROJECT		

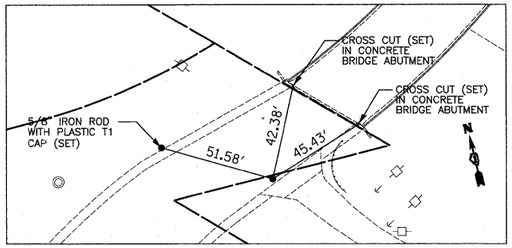

CONTROL POINT #1
N.1,937,229.844-E.984,627.479

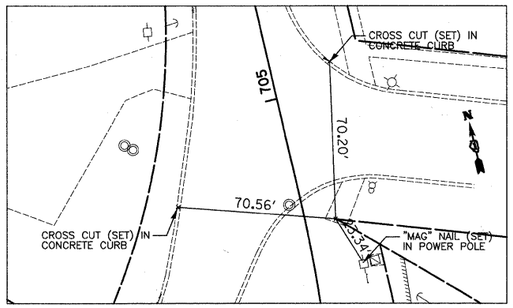

CONTROL POINT #2
N.1,937,409.203-E.984,880.390

CURVE NO. 1
Δ = 28° 53' 38" (LT)
D = 8° 40' 05"
R = 661.00'
T = 170.29'
L = 333.34'
E = 21.58'
PC STA = 701+21.78
PI STA = 702+92.07
PT STA = 704+55.12

CURVE NO. 2
Δ = 44° 29' 41" (RT)
D = 3° 15' 00"
R = 1,763.00'
T = 721.17'
L = 1,369.11'
E = 141.80'
PC STA = 451+76.86
PI STA = 458+98.03
PT STA = 465+45.97

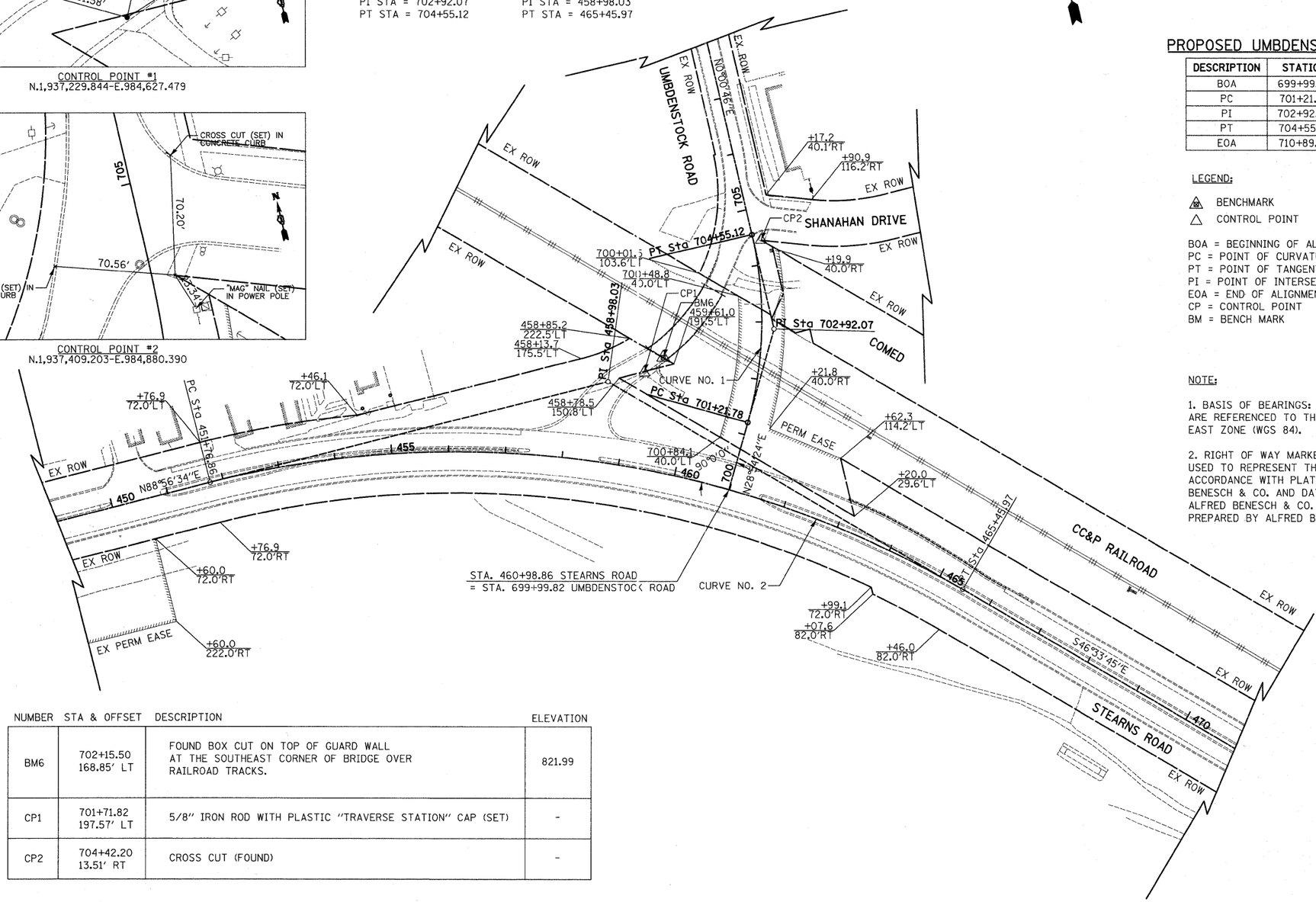

NUMBER	STA & OFFSET	DESCRIPTION	ELEVATION
BM6	702+15.50 168.85' LT	FOUND BOX CUT ON TOP OF GUARD WALL AT THE SOUTHEAST CORNER OF BRIDGE OVER RAILROAD TRACKS.	821.99
CP1	701+71.82 197.57' LT	5/8" IRON ROD WITH PLASTIC "TRAVERSE STATION" CAP (SET)	-
CP2	704+42.20 13.51' RT	CROSS CUT (FOUND)	-

EXISTING STEARNS ROAD ALIGNMENT DATA

DESCRIPTION	STATION	NORTHING	EASTING
-	449+00.00	1937210.5020	983564.1527
PC	451+76.86	1937215.6102	983840.9653
PI	458+98.03	1937228.9161	984562.0100
PT	465+45.97	1936733.0678	985085.6674
-	471+00.00	1936352.1365	985487.9628

PROPOSED UMBDENSTOCK ROAD ALIGNMENT DATA

DESCRIPTION	STATION	NORTHING	EASTING
BOA	699+99.82	1936996.2537	984725.7023
PC	701+21.78	1937103.0160	984784.6547
PI	702+92.07	1937252.0920	984866.9720
PT	704+55.12	1937422.3853	984867.0103
EOA	710+89.79	1938057.0610	984867.1530

LEGEND:

BENCHMARK
CONTROL POINT

BOA = BEGINNING OF ALIGNMENT
PC = POINT OF CURVATURE
PT = POINT OF TANGENT
PI = POINT OF INTERSECTION
EOA = END OF ALIGNMENT
CP = CONTROL POINT
BM = BENCH MARK

NOTE:

1. BASIS OF BEARINGS: ALL BEARINGS DEPICTED AS MEASURED HEREON ARE REFERENCED TO THE ILLINOIS STATE PLANE COORDINATE SYSTEM, EAST ZONE (WGS 84).

2. RIGHT OF WAY MARKERS AND PERMANENT SURVEY MARKERS SHALL BE USED TO REPRESENT THE RIGHT OF WAY LIMITS AND ALIGNMENT IN ACCORDANCE WITH PLAT OF HIGHWAYS #1ST0145PE PREPARED BY ALFRED BENESCH & CO. AND DATED DECEMBER 6, 2005, #1ST0146PE PREPARED BY ALFRED BENESCH & CO. AND DATED APRIL 10, 2006, AND #1ST0148 PREPARED BY ALFRED BENESCH & CO. AND DATED FEBRUARY 9, 2007.

FINAL SURVEY / ORIGINAL SURVEY
NOTE BOOK
NO.
SURVEYED
PLOTTED
TEMPLATE
AREAS
AREAS CHECKED
BY
DATE

CIVILTECH
450 E Devon Ave, Suite 300
Itasca, Illinois 60143
Tel: 630.773.3900 Fax: 630.773.3975
www.civiltechinc.com

DESIGNED	- PK	REVISED -
DRAWN	- PK	REVISED -
CHECKED	- RTM	REVISED -
DATE	- 3/25/2011	REVISED -

STATE OF ILLINOIS
DEPARTMENT OF TRANSPORTATION

SCALES
HORIZ. 0 100 200

ALIGNMENT, TIES, AND BENCHMARKS

SHEET NO. OF SHEETS STA. TO STA.

F.A.P. RTE.	SECTION	COUNTY	TOTAL SHEETS	SHEET NO.
361	06-00214-27-BR	KANE	87	13
		CONTRACT NO. 63595		
FED. ROAD DIST. NO. 1	ILLINOIS	FED. AID PROJECT		

LEGEND:

REMOVAL

XX" TREE REMOVAL AND SIZE

DEPRESSED CURB WITH DETECTABLE WARNINGS

GUTTER FLAG PITCHED OUT AT PAVEMENT CROSS SLOPE

EXISTING RANDALL ROAD ALIGNMENT DATA

DESCRIPTION	STATION	NORTHING	EASTING
B.O.A.	461+24.26	1935349.54	982260.37
E.O.A.	483+00.00	1937525.23	982244.88

NUMBER	STA & OFFSET	DESCRIPTION	ELEVATION
BM8	447+43.53 215.88' LT	"ALUMINUM DISK" SET IN CONCRETE AT THE NORTHEAST CORNER OF STEARNS ROAD AND RANDALL ROAD AND RANDALL ROAD IN THE SOUTHWEST CORNER OF THE JEWEL PARKING LOT.	805.97

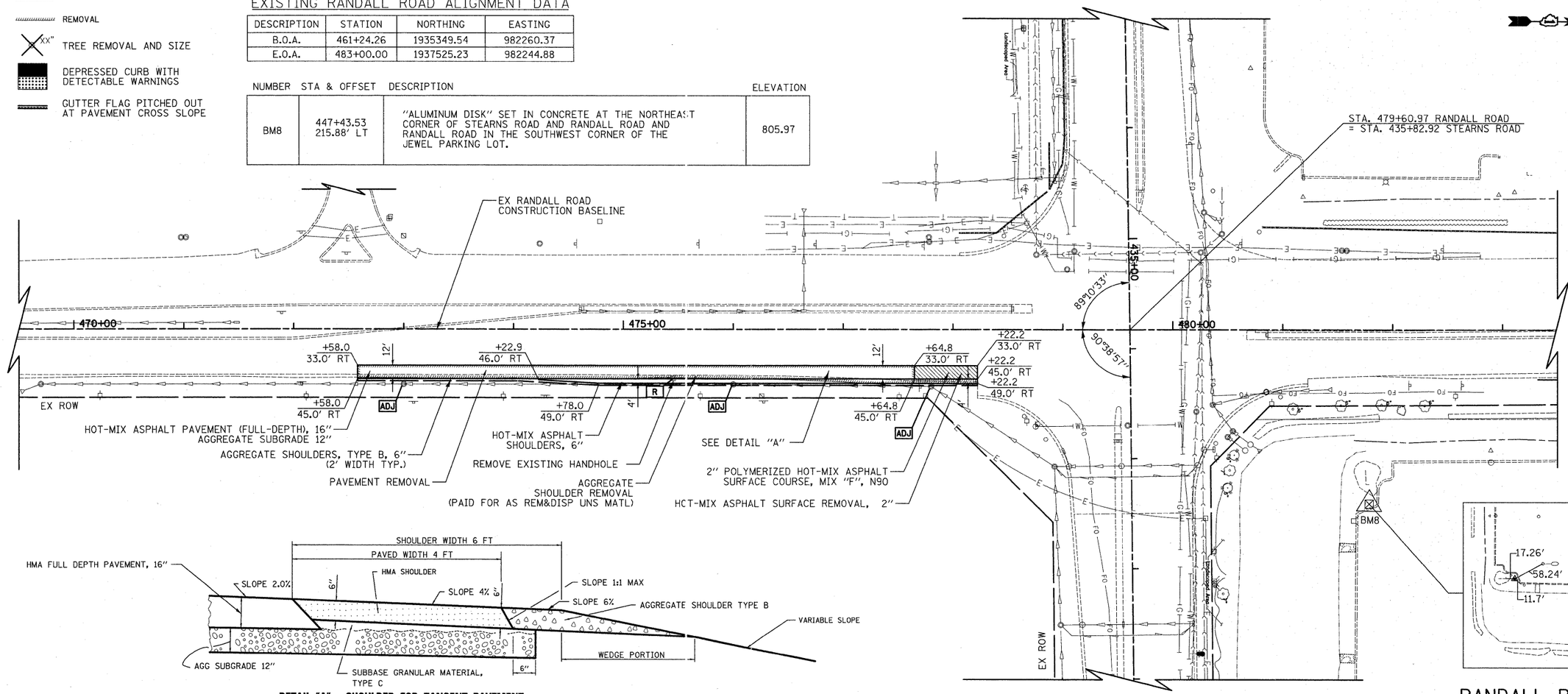

DETAIL "A" – SHOULDER FOR TANGENT PAVEMENT

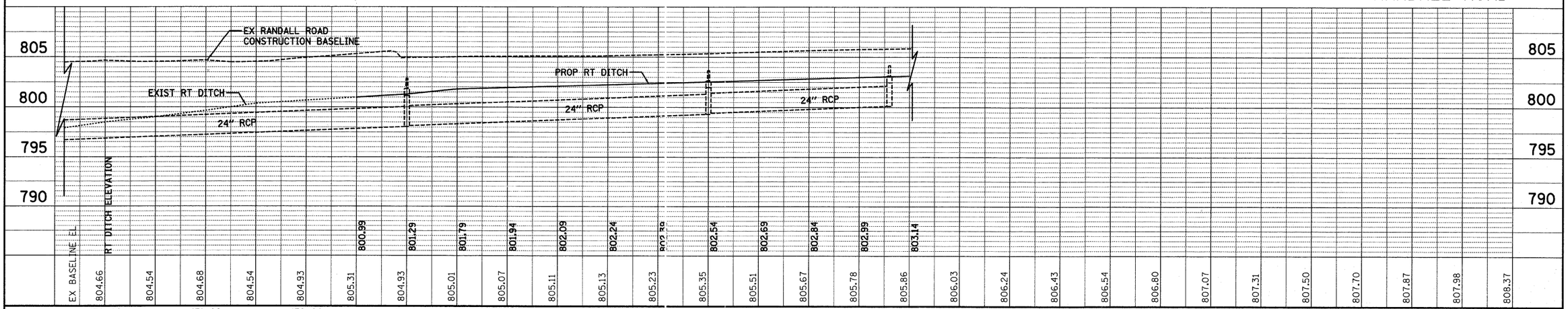

CIVILTECH
450 E Devon Ave, Suite 300
Itasca, Illinois 60143
Tel: 630.773.3900 Fax: 630.773.3975
www.civiltechinc.com

DESIGNED	- PK	REVISED -
DRAWN	- PK	REVISED -
CHECKED	- RTM	REVISED -
DATE	- 3/25/2011	REVISED -

STATE OF ILLINOIS
DEPARTMENT OF TRANSPORTATION

SCALES
VERT. 0 5 10
HORIZ. 0 50 100

PLAN AND PROFILE

SHEET NO. 1 OF 3 SHEETS | STA. 469+50 TO STA. 483+50

F.A.P. RTE.	SECTION	COUNTY	TOTAL SHEETS	SHEET NO.
361	06-00214-27-BR	KANE	87	14
		CONTRACT NO. 63595		
FED. ROAD DIST. NO. 1	ILLINOIS	FED. AID PROJECT		

FINAL SURVEY — NOTE BOOK — NO. — SURVEYED — PLOTTED — TEMPLATE — AREAS — DATE — BY — AREAS CHECKED

ORIGINAL SURVEY — NOTE BOOK — NO. — SURVEYED — PLOTTED — TEMPLATE — AREAS — DATE — BY — AREAS CHECKED

TRAFFIC SIGNAL LEGEND

	EXISTING	PROPOSED
CONTROLLER		
SERVICE INSTALLATION		
SIGNAL HEAD		
SIGNAL HEAD WITH BACKPLATE		
SIGNAL HEAD, PEDESTRIAN		
SIGNAL POST		
MAST ARM ASSEMBLY AND POLE, STEEL		
MAST ARM ASSEMBLY AND POLE, ALUMINUM		
COMBINATION MAST ARM ASSEMBLY AND POLE, STEEL		
COMMON TRENCH		CT
UNIT DUCT		UD
HANDHOLE		
HEAVY-DUTY HANDHOLE		H
DOUBLE HANDHOLE		
G.S. CONDUIT IN TRENCH OR PUSHED		
PEDESTRIAN PUSH-BUTTON DETECTOR		
DETECTOR LOOP		
CAST IRON JUNCTION BOX	"E"	

	EXISTING	PROPOSED
EMERGENCY VEHICLE SYSTEM DETECTOR		
CONFIRMATION BEACON		
SIGNAL HEAD PROGRAMMED	"P"	"P"
CONDUIT SPLICE		
WOOD POLE	"E"	
RACEWAY FOR MAGNETIC DETECTOR, TYPE I OR TYPE II	"E"	
VEHICLE DETECTOR, NON COMPENSATED MAGNETIC TYPE		
RAILROAD CONTROLLER	"E"	
ILLUMINATED SIGN, FIBER OPTIC "NO LEFT TURN"	"E"	
ILLUMINATED SIGN, FIBER OPTIC "NO RIGHT TURN"	"E"	
TELEPHONE CONNECTION		T
UNINTERRUPTIBLE POWER SUPPLY		UPS
VIDEO DETECTION CAMERA		
PTZ CAMERA		

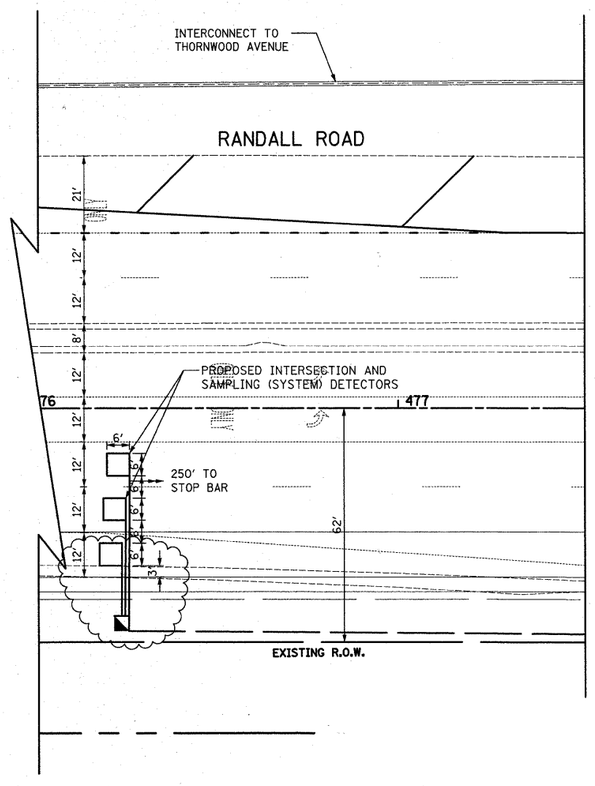

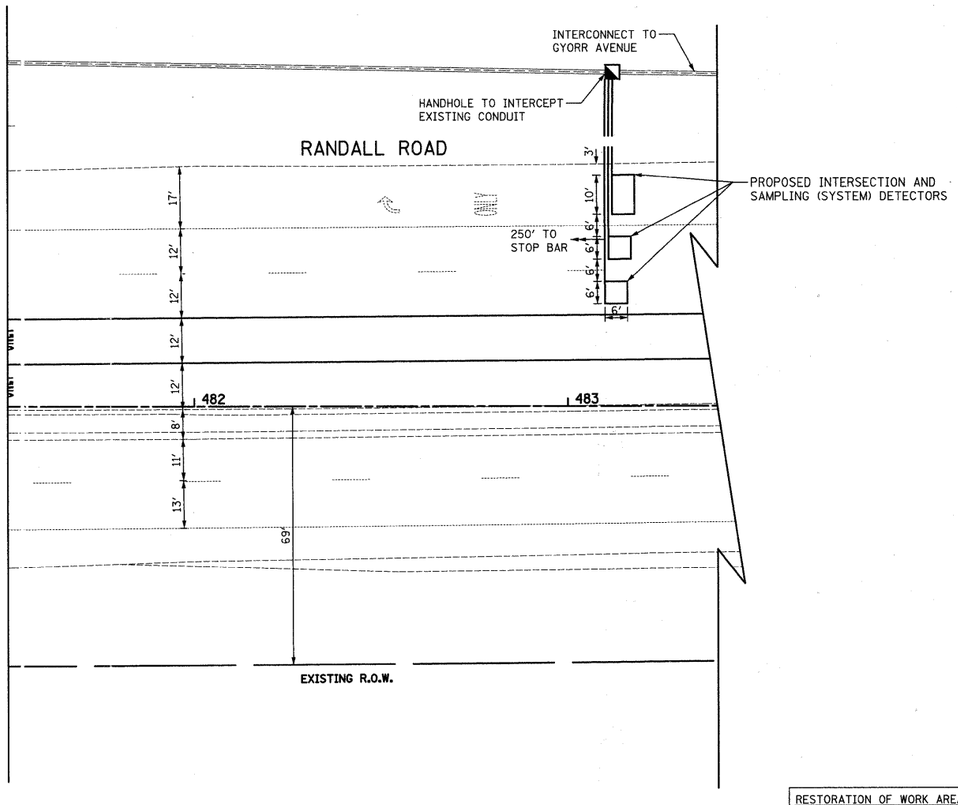

NOTE:
THE TRAFFIC SIGNAL CONTROLLER EQUIPMENT FOR THIS PROJECT SHALL BE "EAGLE" TO MATCH THE EXISTING ADJACENT SYSTEM.

RESTORATION OF WORK AREA.
RESTORATION OF THE TRAFFIC SIGNAL WORK AREA SHALL BE INCIDENTAL TO THE RELATED PAY ITEM SUCH AS FOUNDATION, CONDUIT, HANDHOLE, TRENCH AND BACKFILL, ETC., AND NO EXTRA COMPENSATION SHALL BE ALLOWED. ALL ROADWAY SURFACES SUCH AS SHOULDER, MEDIAN, SIDEWALKS, PAVEMENT, ETC. SHALL BE REPLACED IN KIND. ALL DAMAGE TO MOWED LAWNS SHALL BE REPLACED WITH AN APPROVED SALT TOLERANT SOD, AND ALL DAMAGE TO UNMOWED FIELDS SHALL BE SEEDED IN ACCORDANCE WITH STANDARD SPECIFICATIONS 252 AND 250 RESPECTIVELY.

FILE NAME =	USER NAME = CIVILTECH ENGINEERING, INC.	DESIGNED - JSH	REVISED - 4/1/2011
CIVILTECH		DRAWN - AKW	REVISED -
	PLOT SCALE = 20	CHECKED - BRD	REVISED -
	PLOT DATE = 4/1/2011	DATE - 3/30/09	REVISED -

STATE OF ILLINOIS
DEPARTMENT OF TRANSPORTATION

TRAFFIC SIGNAL INSTALLATION PLAN
RANDALL ROAD & STEARNS ROAD

SCALE: 1"=20' | SHEET NO. 1 OF 1 SHEETS | STA. | TO STA.

F.A.P. RTE.	SECTION	COUNTY	TOTAL SHEETS	SHEET NO.
361	06-00214-27-BR	KANE	87	14A
		CONTRACT NO. 63595		
FED. ROAD DIST. NO. 1	ILLINOIS	FED. AID PROJECT		

CABLE PLAN LEGEND

EXISTING	PROPOSED	
G	G	8" (200mm) TRAFFIC SIGNAL SECTION
R	R	12" (300mm) TRAFFIC SIGNAL SECTION
W	W	12" (300mm) PEDESTRIAN SIGNAL SECTION
		12" (300mm) PEDESTRIAN SIGNAL SECTION
		CONTROLLER CABINET
		SERVICE INSTALLATION
T	T	TELEPHONE CONNECTION
		MAGNETIC DETECTOR
		EMERGENCY VEHICLE LIGHT DETECTOR
		CONFIRMATION BEACON
		PUSHBUTTON DETECTOR
		VEHICLE DETECTOR, INDUCTION LOOP
2	2	DENOTES NUMBER OF CONDUCTORS, ALL CABLE NO. 14 EXCEPT AS INDICATED. ALL LOOP DETECTOR CABLE TO BE SHIELDED.
		MICROWAVE VEHICLE SENSOR
R Y G Y G	R Y G Y G	SIGNAL FACE WITH BACKPLATE, "P" INDICATES PROGRAMMED HEAD
"P"	"P"	
"E"		RAILROAD CONTROL CABINET
"E"		ILLUMINATED SIGN "NO LEFT TURN"
"E"		ILLUMINATED SIGN "NO RIGHT TURN"
H/C	C	GROUND ROD AT HANDHOLE (H), DOUBLE HANDHOLE (H), OR CONTROLLER (C).
MA/P	MA/P	GROUND ROD AT POST (P), OR MAST ARM POLE (MA).
S	S	GROUND ROD AT ELECTRIC SERVICE INSTALLATION
1	1	GROUND CABLE IN CONDUIT NO. 6 SOLID COPPER (GREEN)
36	36	FIBER OPTIC CABLE IN CONDUIT NO. 62.5/125 MM12F SM24F
#	#	COAXIAL CABLE
V	V	VENDOR SPECIFIED CABLE
		IMAGE SENSOR
		STREET LIGHT LUMINAIRE
		DOME PAN/TILT/ZOOM (PTZ) CAMERA
	UPS	UNINTERRUPTIBLE POWER SUPPLY

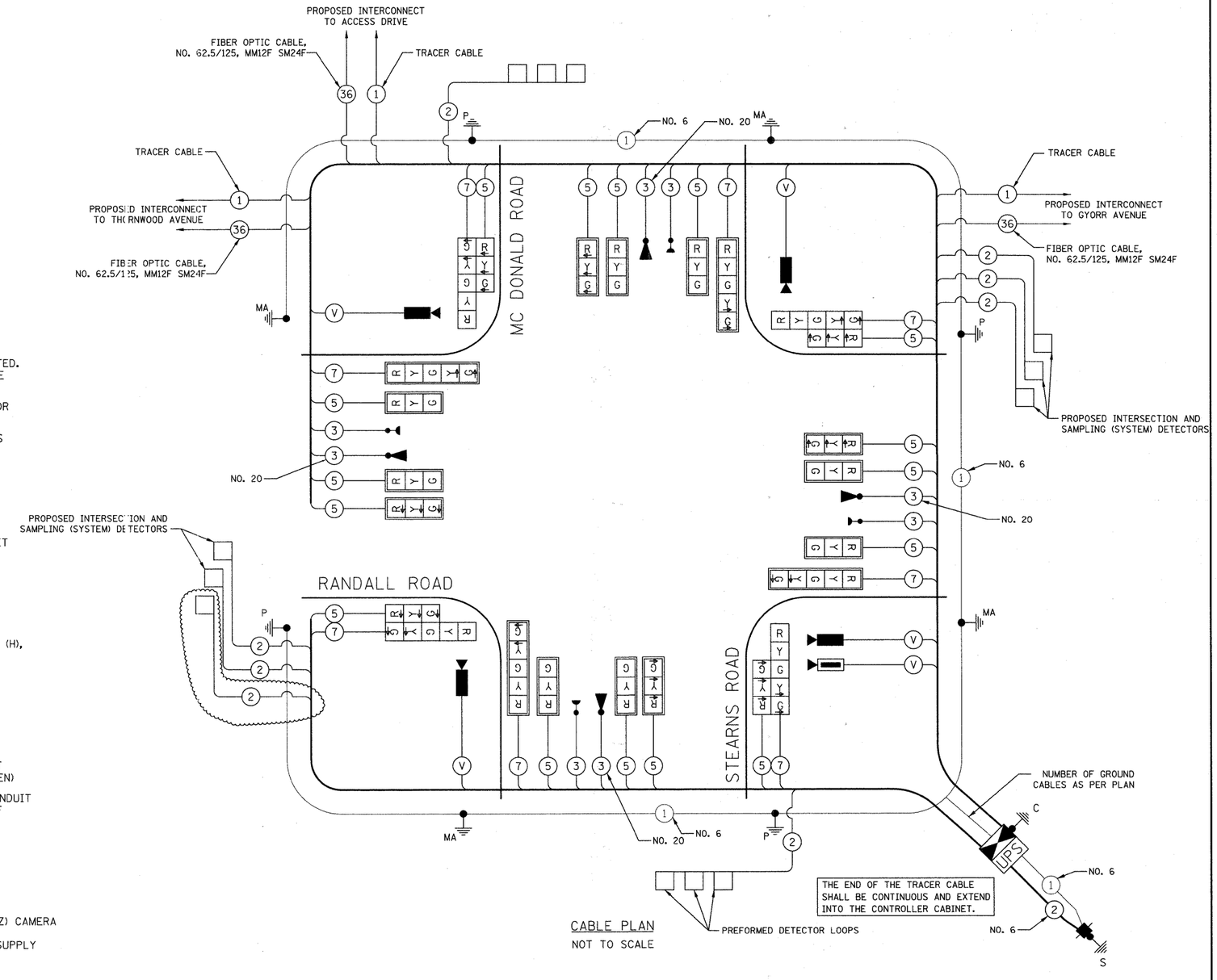

CABLE PLAN
NOT TO SCALE

I.D.O.T. TRAFFIC SIGNAL INSTALLATION ELECTRICAL SERVICE REQUIREMENTS					TOTAL WATTAGE
TYPE	NO. LAMPS	WATTAGE INCAND.	WATTAGE LED	% OPERATION	
SIGNAL (RED)	24		17	0.50	204
(YELLOW)	24		25	0.25	150
(GREEN)	24		15	0.25	90
ARROW	16		12	0.10	19
CONTROLLER	1		100	1.00	100
VIDEO SYSTEM	1		150	1.00	150
FLASHER				0.50	
				TOTAL =	713

ENERGY COSTS TO: VILLAGE OF SOUTH ELGIN
10 N. WATER STREET
SOUTH ELGIN, IL 60177
ENERGY SUPPLY: CONTACT: MARTY RUBIN
PHONE: (847) 608-2400
COMPANY: COM ED

FOUNDATION (DEPTH)	FT.	(m)
TYPE A - POST	4	(1.2)
D- CONTROLLER	4	(1.2)
E- M. ARM POLE		
24" (600mm)	10	(3.0)
30" (750mm)	15	(4.6)
36" (900mm)	15	(4.6)
42" (1050mm)	25	(7.6)

CABLE SLACK	FT.	(m)
HANDHOLE	6.5	(2.0)
DOUBLE HANDHOLE	13	(4.0)
SIGNAL POST	2	(1.0)
CONTROLLER CAB.	1	(0.5)
FIBER OPTIC	13	(4.0)
ELECTRIC SERVICE	1	(0.5)
GROUND CABLE	1	(0.5)

VERTICAL	FT.	(m)
ALL FOUNDATIONS	3.5	(2.0)
MAST ARM (L) POLE	20'+L-2= (6m+L-0.6m)=	
BRACKET MOUNTED	13	(4.0)
PED. PUSHBUTTON	4	(1.2)
ELECTRIC SERVICE	13.5	(4.1)
SERVICE TO GROUND	13.5	(4.1)
POST MOUNTED	6	(1.8)

NOTE:
THE TRAFFIC SIGNAL CONTROLLER EQUIPMENT FOR THIS PROJECT SHALL BE "EAGLE" TO MATCH THE EXISTING ADJACENT SYSTEM.

FILE NAME =	USER NAME = CIVILTECH ENGINEERING, INC.	DESIGNED - JSH	REVISED - 4/1/11
CIVILTECH		DRAWN - JSH	REVISED -
	PLOT SCALE = 50	CHECKED - BRD	REVISED -
	PLOT DATE = 4/1/2011	DATE - 3/30/09	REVISED -

STATE OF ILLINOIS
DEPARTMENT OF TRANSPORTATION

CABLE PLAN
RANDALL ROAD & STEARNS ROAD

SCALE: N.T.S. | SHEET NO. 1 OF 1 SHEETS | STA. | TO STA.

F.A.P. RTE.	SECTION	COUNTY	TOTAL SHEETS	SHEET NO.
361	06-00214-27-BR	KANE	87	14B
		CONTRACT NO. 63595		
FED. ROAD DIST. NO. 1	ILLINOIS	FED. AID PROJECT		

STEARNS ROAD
CURVE NO. 2

Δ = 44° 29′ 41″ (RT)
D = 3° 15′ 00″
R = 1,763.00′
T = 721.17′
L = 1,369.11′
E = 141.80′
PC STA = 451+76.86
PI STA = 458+98.03
PT STA = 465+45.97

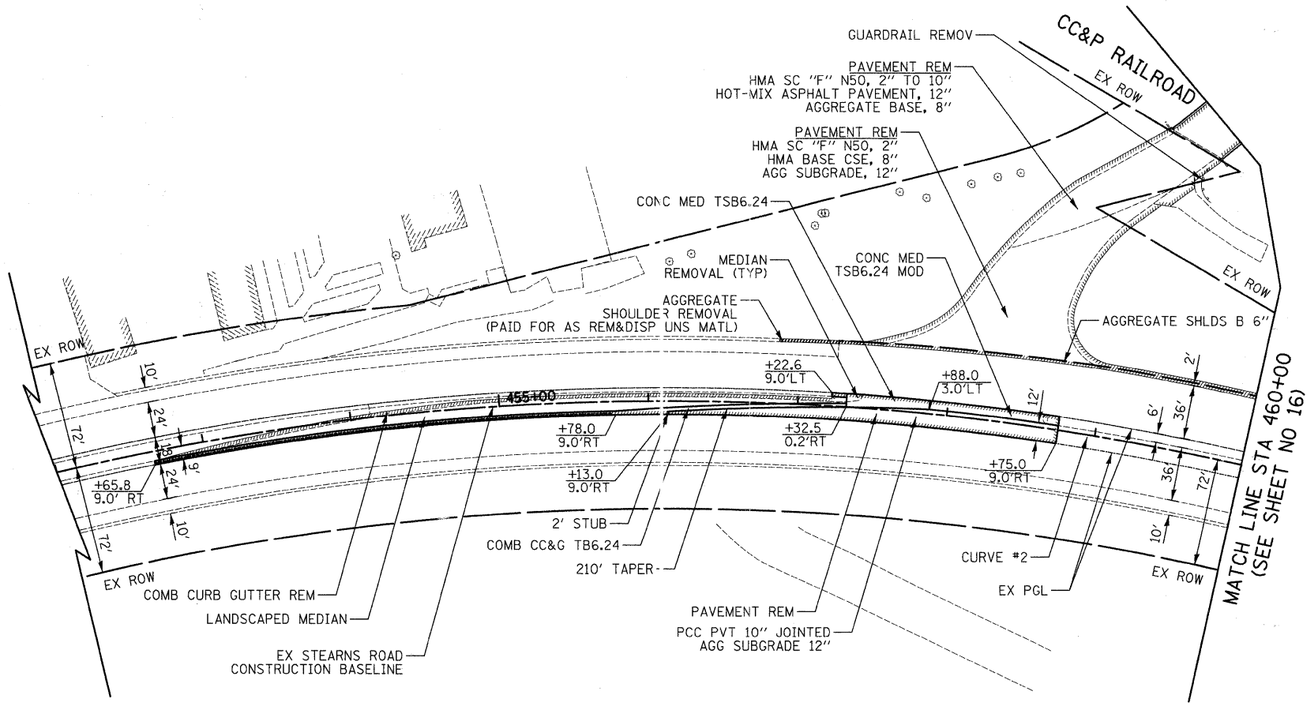

STEARNS ROAD (EB)
PROPOSED EDGE OF PAVEMENT TABLE

STATION	OFFSET	ELEVATION
456+13.0	7.0′ RT	816.54
456+25.0	6.3′ RT	816.63
456+50.0	4.9′ RT	816.81
456+75.0	3.5′ RT	816.99
457+00.0	2.0′ RT	817.17
457+25.0	0.6′ RT	817.34
457+50.0	0.8′ LT	817.52
457+75.0	2.3′ LT	817.70
458+00.0	3.0′ LT	817.89
458+25.0	3.0′ LT	818.09
458+50.0	3.0′ LT	818.29
458+75.0	3.0′ LT	818.49

STEARNS ROAD

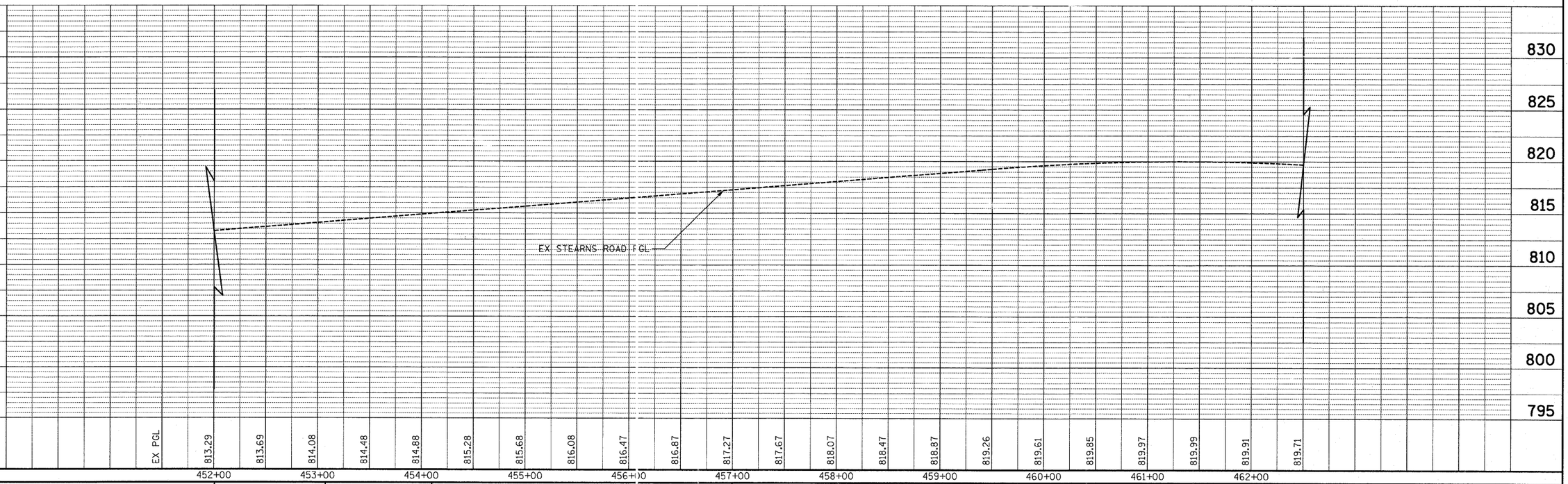

CIVILTECH
450 E Devon Ave, Suite 300
Itasca, Illinois 60143
Tel: 630.773.3900 Fax: 630.773.3975
www.civiltechinc.com

DESIGNED - PK	REVISED -
DRAWN - PK	REVISED -
CHECKED - RTM	REVISED -
DATE - 3/25/2011	REVISED -

STATE OF ILLINOIS
DEPARTMENT OF TRANSPORTATION

SCALES
VERT. 0 5 10
HORIZ. 0 50 100

PLAN AND PROFILE

SHEET NO. 2 OF 3 SHEETS | STA. 452+00 TO STA. 460+00

F.A.P. RTE.	SECTION	COUNTY	TOTAL SHEETS	SHEET NO.
361	06-00214-27-BR	KANE	87	15
		CONTRACT NO. 63595		
FED. ROAD DIST. NO. 1	ILLINOIS	FED. AID PROJECT		

FINAL SURVEY — NOTE BOOK — NO. — BY — DATE — SURVEYED — PLOTTED — TEMPLATE — AREAS — AREAS CHECKED

ORIGINAL SURVEY — NOTE BOOK — NO. — BY — DATE — SURVEYED — PLOTTED — TEMPLATE — AREAS — AREAS CHECKED

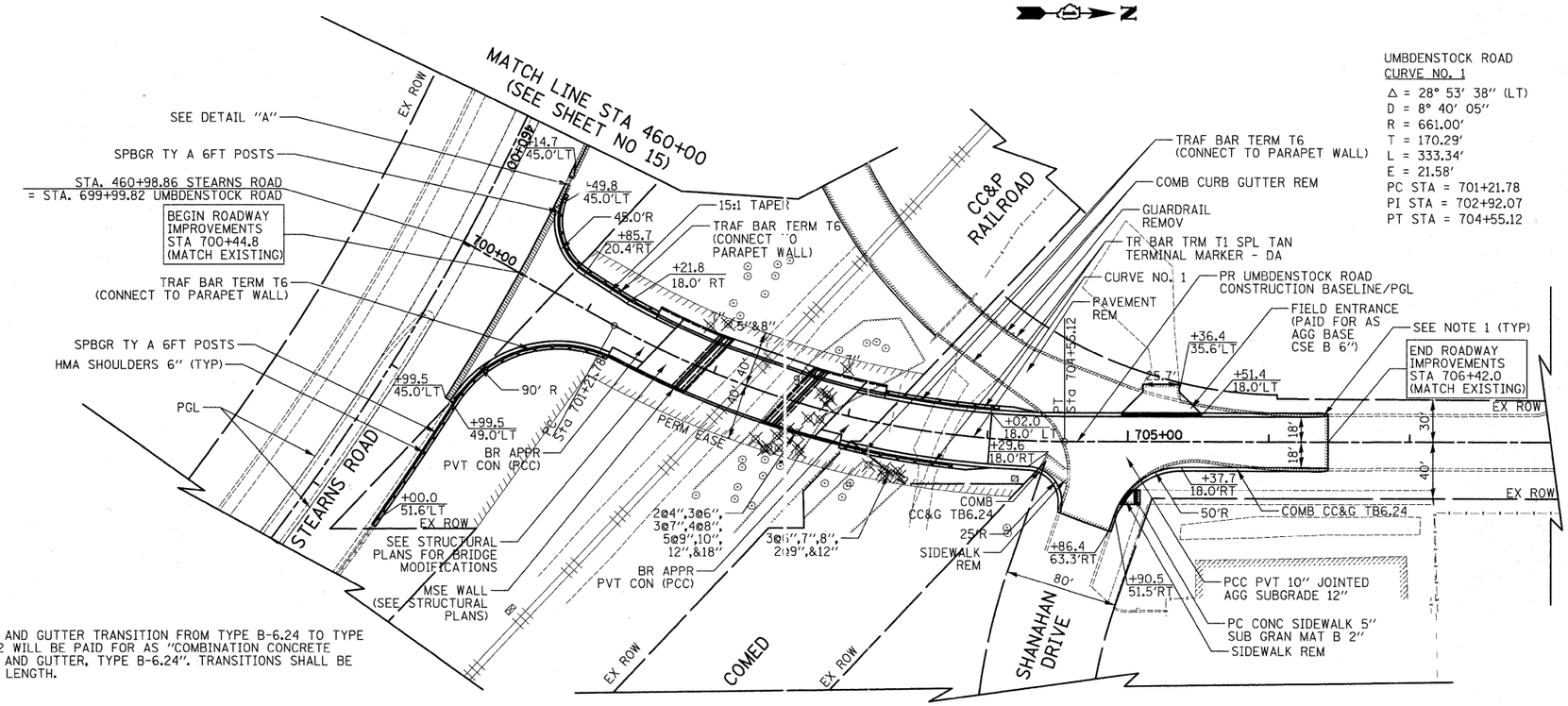

NOTE:

1. CURB AND GUTTER TRANSITION FROM TYPE B-6.24 TO TYPE B-6.12 WILL BE PAID FOR AS "COMBINATION CONCRETE CURB AND GUTTER, TYPE B-6.24". TRANSITIONS SHALL BE 6' IN LENGTH.

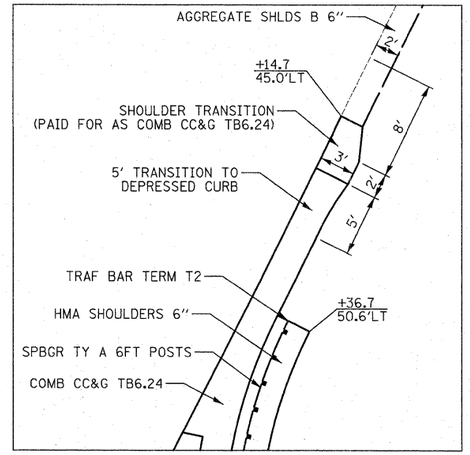

DETAIL "A"
(N.T.S.)

UMBDENSTOCK ROAD

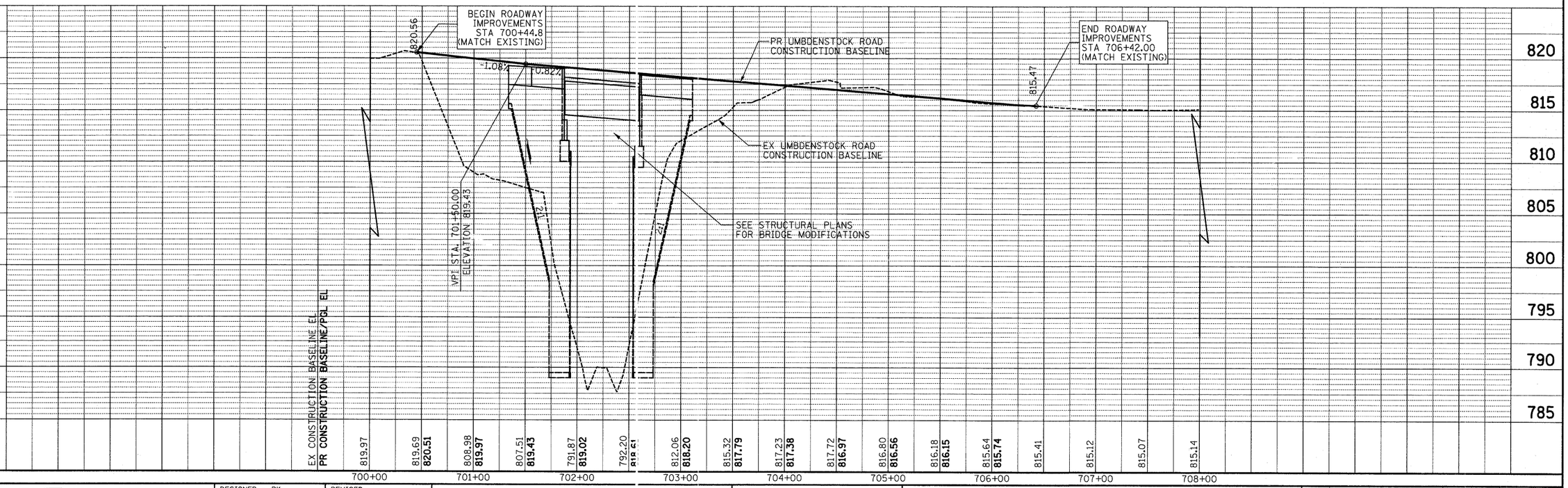

CIVILTECH	450 E Devon Ave, Suite 300 Itasca, Illinois 60143 Tel: 630.773.3900 Fax: 630.773.3975 www.civiltechinc.com	DESIGNED - PK DRAWN - PK CHECKED - RTM DATE - 3/25/2011	REVISED - REVISED - REVISED - REVISED -

STATE OF ILLINOIS
DEPARTMENT OF TRANSPORTATION

SCALES
VERT. 0 5 10
HORIZ. 0 50 100

PLAN AND PROFILE

SHEET NO. 3 OF 3 SHEETS | STA. 700+00 TO STA. 708+00

F.A.P. RTE.	SECTION	COUNTY	TOTAL SHEETS	SHEET NO.
361	06-00214-27-BR	KANE	87	16
		CONTRACT NO. 63595		
FED. ROAD DIST. NO. 1	ILLINOIS	FED. AID PROJECT		

FINAL SURVEY — NOTE BOOK — NO. — BY — DATE
SURVEYED — PLOTTED — TEMPLATE — AREAS — AREAS CHECKED

ORIGINAL SURVEY — NOTE BOOK — NO. — BY — DATE
SURVEYED — PLOTTED — TEMPLATE — AREAS — AREAS CHECKED

THIS PROJECT INCLUDES CONSTRUCTING A NEW BRIDGE TO CARRY UMBDENSTOCK ROAD OVER CC&P RAILROAD. THE BRIDGE IS ON A NEW ALIGNMENT AND INTERSECTS WITH STEARNS ROAD AT 90 DEGREES. THERE IS A WATER MAIN AND SANITARY FORCE MAIN ON THE EXISTING BRIDGE THAT WILL BE RELOCATED TO THE PROPOSED STRUCTURE. THE WATER MAIN AND SANITARY FORCE MAIN HAVE BEEN IDENTIFIED AS FACILITIES OWNED AND OPERATED BY THE OTTER CREEK WATER RECLAMATION DISTRICT (OCWRD).

BELOW ARE THE SUGGESTED CONSTRUCTION SEQUENCE FOR RELOCATION OF BOTH THE WATER MAIN AND SANITARY FORCE MAINS:

STAGE 1 CONSTRUCT BRIDGE ACROSS CC&P RAILROAD

1. INSTALL PROPOSED WATER MAIN (WM STAGE 1)
   - A. CONSTRUCT WATER MAIN DOWN THROUGH (TEMPORARY) UMBDENSTOCK ROAD ON THE SOUTH SIDE TO INCLUDE A FIRE HYDRANT LOCATED AT NORHTWEST CORNER OF THE STEARNS ROAD INTERSECTION.
     - I. EXTEND ACROSS (TEMPORARY) UMBDENSTOCK ROAD WITH OPEN TRENCH AND TEMPORARY LANE CLOSURES.
       1. TRENCH PAVEMENT CROSSINGS REMOVED DUE TO UTILITY WORK SHALL NOT BE LEFT IN GRAVEL OVERNIGHT. TEMPORARY HOT-MIX-ASPHALT PATCHING SHALL BE USED IN LIEU OF IMMEDIATE PAVEMENT RECONSTRUCTION.
     - II. CONNECT TO EXISTING MAIN. SHUT DOWN ALLOWED - COORDINATE WITH OCWRD AND VILLAGE OF SOUTH ELGIN (VOSE)
   - B. CONSTRUCT WATER MAIN UP TO EXISTING UMBDENSTOCK ROAD ON THE NORTH SIDE.
     - I. CONNECT TO EXISTING MAIN. (SHUT DOWN ALLOWED - COORDINATE WITH OCWRD AND VOSE)
       1. CONSTRUCT NEW VALVE AND VAULT.
   - C. ABANDON EXISTING WATER MAIN BOTH SIDES (NORTH AND SOUTH OF CC&P)
     - I. CAP, PLUG, AND FILL WITH CONTROLLED LOW-STRENGTH MATERIAL (CLSM).
2. INSTALL PROPOSED SANITARY FORCE MAIN. (SAN STAGE 1)
   - A. CONSTRUCT SEWER DOWN THROUGH (TEMPORARY) UMBDENSTOCK ROAD ON THE SOUTH SIDE.
     - I. EXTEND ACROSS (TEMPORARY) UMBDENSTOCK ROAD WITH OPEN TRENCH AND TEMPORARY LANE CLOSURES.
       1. TRENCH PAVEMENT CROSSINGS REMOVED DUE TO UTILITY WORK SHALL NOT BE LEFT IN GRAVEL OVERNIGHT. TEMPORARY HOT-MIX-ASPHALT PATCHING SHALL BE USED IN LIEU OF IMMEDIATE PAVEMENT RECONSTRUCTION.
     - II. STOP SHORT OF CONNECTION POINT.
   - B. CONSTRUCT FORCE MAIN UP THROUGH EXISTING UMBDENSTOCK ROAD ON THE NORTH SIDE.
     - I. EXTEND ACROSS UMBDENSTOCK ROAD WITH OPEN TRENCH AND TEMPORARY LANE CLOSURES.
       1. TRENCH PAVEMENT CROSSINGS REMOVED DUE TO UTILITY WORK SHALL NOT BE LEFT IN GRAVEL OVERNIGHT. TEMPORARY HOT-MIX-ASPHALT PATCHING SHALL BE USED IN LIEU OF IMMEDIATE PAVEMENT RECONSTRUCTION.
     - II. CONSTRUCT NEW MANHOLE AROUND EXISTING PIPE.
       1. CONNECT PROPOSED SANITARY SEWER TO MANHOLE.
       2. BREAK IN CONNECTION TO THE EXISTING SANITARY PIPE WITHIN MANHOLE.

NOTE:

1. ALL PAVEMENT MARKINGS ON FINAL PAVEMENT SHALL BE TYPE III TAPE, OTHERWISE ALL PAVEMENT MARKINGS WILL BE TEMPORARY PAVEMENT MARKINGS.
2. ALL DIAMOND SHAPE CONSTRUCTION WARNING SIGNS SHALL BE 48" X 48" UNLESS OTHERWISE NOTED.

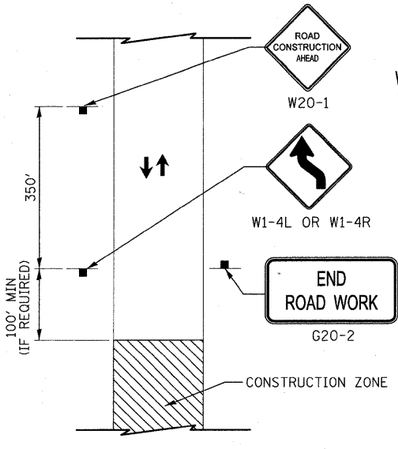

TYPICAL SIGN LAYOUT

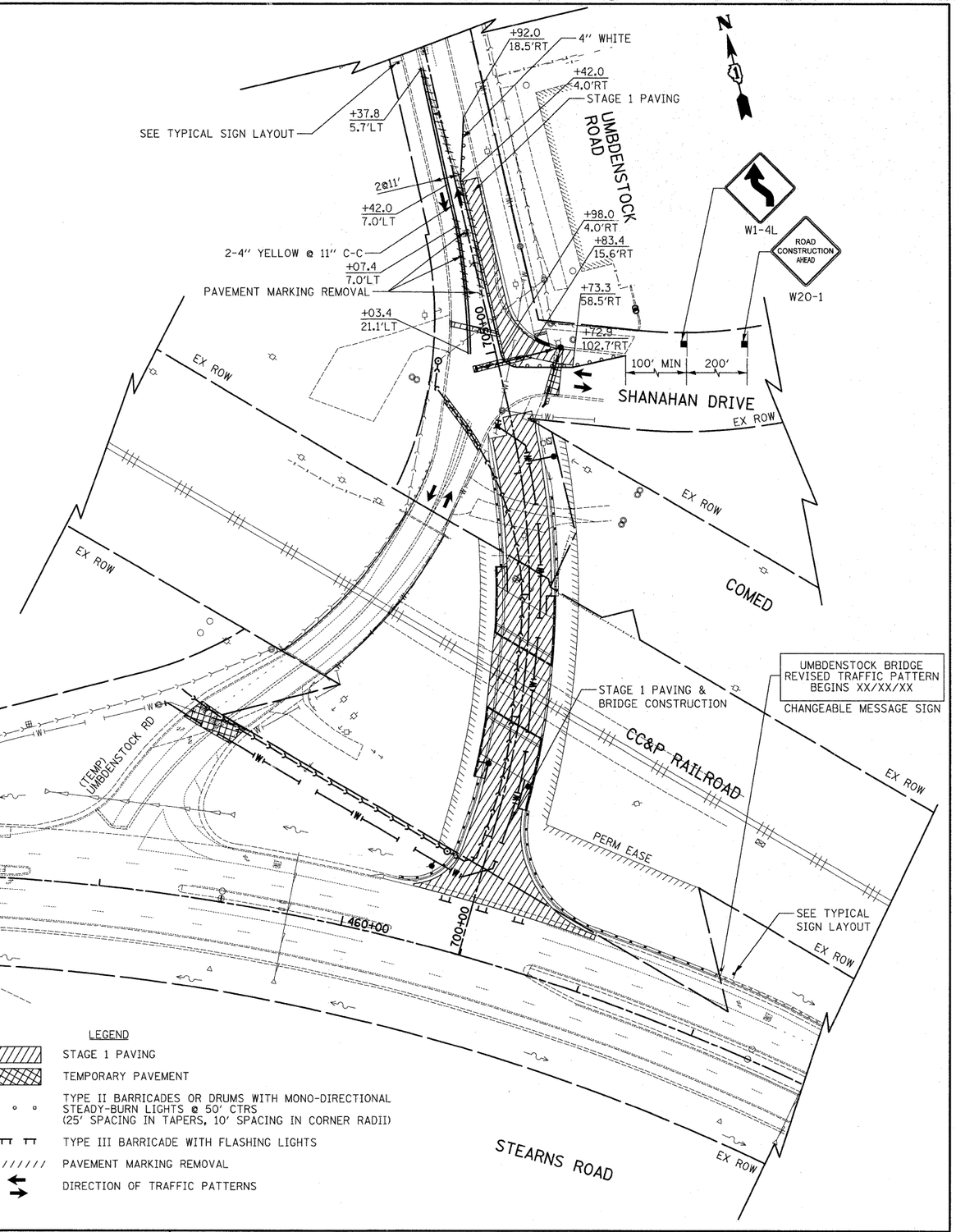

LEGEND

- STAGE 1 PAVING
- TEMPORARY PAVEMENT
- TYPE II BARRICADES OR DRUMS WITH MONO-DIRECTIONAL STEADY-BURN LIGHTS @ 50' CTRS (25' SPACING IN TAPERS, 10' SPACING IN CORNER RADII)
- TYPE III BARRICADE WITH FLASHING LIGHTS
- PAVEMENT MARKING REMOVAL
- DIRECTION OF TRAFFIC PATTERNS

FINAL SURVEY — NOTE BOOK — NO. — SURVEYED — PLOTTED — PLOTTED AREAS — AREAS CHECKED — BY — DATE

ORIGINAL SURVEY — NOTE BOOK — NO. — SURVEYED — PLOTTED — PLOTTED AREAS — AREAS CHECKED — BY — DATE

CIVILTECH
450 E Devon Ave, Suite 300
Itasca, Illinois 60143
Tel: 630.773.3900 Fax: 630.773.3975
www.civiltechinc.com

DESIGNED	PK	REVISED	-
DRAWN	PK	REVISED	-
CHECKED	RTM	REVISED	-
DATE	3/25/2011	REVISED	-

STATE OF ILLINOIS
DEPARTMENT OF TRANSPORTATION

SCALES
HORIZ. 0 50 100

STAGES OF CONSTRUCTION – STAGE 1

SHEET NO. 1 OF 3 SHEETS | STA. 700+44.8 TO STA. 706+42.0

F.A.P. RTE.	SECTION	COUNTY	TOTAL SHEETS	SHEET NO.
361	06-00214-27-BR	KANE	87	17
		CONTRACT NO. 63595		
FED. ROAD DIST. NO. 1	ILLINOIS	FED. AID PROJECT		

STAGE 2 OPEN BRIDGE ACROSS CC&P RAILROAD AND SHIFT TRAFFIC

1. INSTALL PROPOSED SANITARY FORCE MAIN. (SAN STAGE 2)
   - A. CONSTRUCT FORCE MAIN CONNECTION ON THE SOUTH SIDE OF THE RAIL ROAD.
     - I. CONSTRUCT (TEMPORARY) SANITARY FORCE MAIN BYPASS SYSTEM.
       1. INSTALL AN UPSTREAM AND DOWNSTREAM PRESSURE CONNECTION WITH BYPASS PIPING.
       2. INSTALL UPSTREAM AND DOWNSTREAM CLOSURE / STOP VALVES TO ISOLATE A SECTION OF EXISTING PIPE FOR A CUT-IN-SLEEVE.
     - II. INSTALL CUT-IN-SLEEVE FOR PROPOSED SANITARY FORCE MAIN.
     - III. OPEN PROPOSED SANITARY FORCE MAIN AND ABANDON EXISTING SANITARY FORCE MAIN.
       1. OPEN, CLOSE, AND ABANDON TEMPORARY BYPASS SYSTEM AND EXISTING FORCE MAIN.
   - B. ABANDON EXISTING FORCE MAIN ON BOTH SIDES (NORTH AND SOUTH OF CC&P)
     - I. CAP, PLUG, AND FILL WITH CONTROLLED LOW-STRENGTH MATERIAL (CLSM).
       1. TEMPORARY SHUTDOWN ALLOWED FOR A MAXIMUM OF 45 TO 60 MINUTES- COORDINATE WITH OCWRD AND VOSE.
     - II. REMOVE FORCE MAIN CONNECTION INVERT WITHIN THE NEWLY CONSTRUCTED MANHOLE (NORTH-SIDE) AND SEAL WITH HYDRAULIC CEMENT.

NOTE:

1. ALL PAVEMENT MARKINGS ON FINAL PAVEMENT SHALL BE TYPE III TAPE, OTHERWISE ALL PAVEMENT MARKINGS WILL BE TEMPORARY PAVEMENT MARKINGS.
2. ALL DIAMOND SHAPE CONSTRUCTION WARNING SIGNS SHALL BE 48" X 48" UNLESS OTHERWISE NOTED.
3. CONSTRUCT PAVEMENT GRINDING / TEMPORARY PAVEMENT RAMPS TO PROVIDE MAINTENANCE OF TRAFFIC TRANSITIONS BETWEEN STAGES. THIS WORK SHALL NOT BE PAID FOR SEPARATELY, BUT SHALL BE INCLUDED IN THE UNIT BID PRICES OF THE CONTRACT, AND NO ADDITIONAL COMPENSATION WILL BE ALLOWED.
4. PAVEMENT MARKING OFFSETS AND STATIONING SHOULD FOLLOW PAVEMENT MARKING AND SIGNING PLAN UNLESS CALLED OUT OTHERWISE.

LEGEND

- STAGE 2 PAVING
- PAVEMENT GRINDING / TEMPORARY PAVEMENT RAMPS
- TYPE II BARRICADES OR DRUMS WITH MONO-DIRECTIONAL STEADY-BURN LIGHTS @ 50' CTRS (25' SPACING IN TAPERS, 10' SPACING IN CORNER RADII)
- TYPE III BARRICADE WITH FLASHING LIGHTS
- PAVEMENT MARKING REMOVAL
- DIRECTION OF TRAFFIC PATTERNS

DETAIL "A"
SANITARY FORCE MAIN

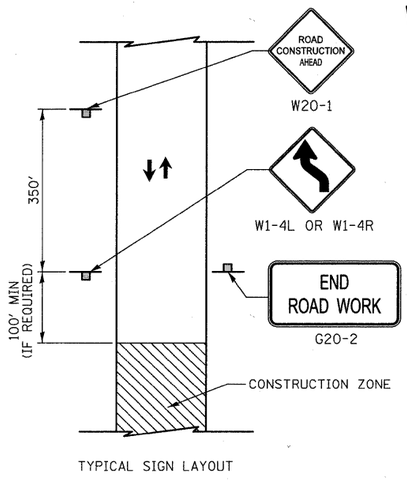

TYPICAL SIGN LAYOUT

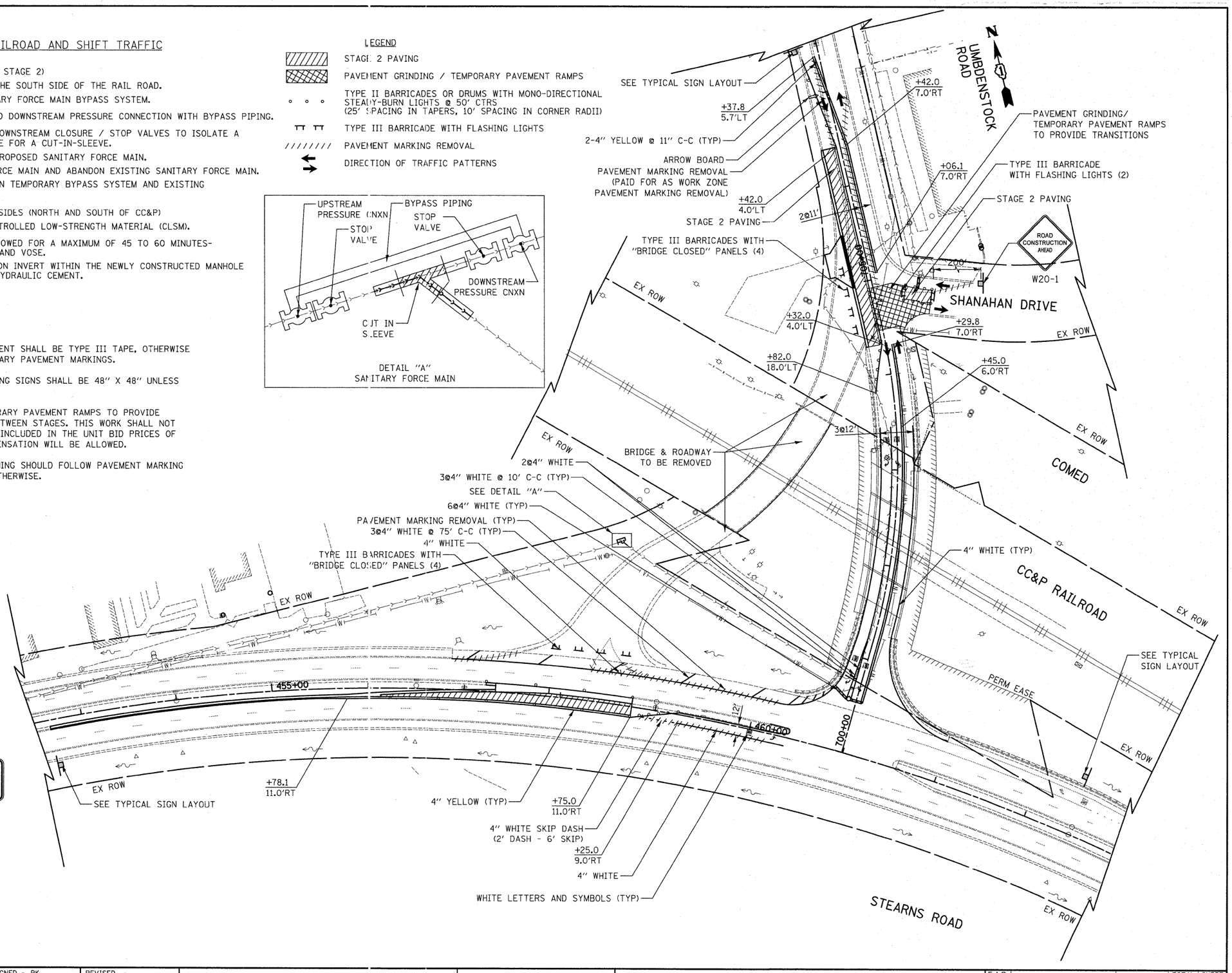

CIVILTECH	450 E Devon Ave, Suite 300 Itasca, Illinois 60143 Tel: 630.773.3900 Fax: 630.773.3975 www.civiltechinc.com	DESIGNED - PK DRAWN - PK CHECKED - RTM DATE - 3/25/2011	REVISED - REVISED - REVISED - REVISED -

STATE OF ILLINOIS
DEPARTMENT OF TRANSPORTATION

SCALES
HORIZ. 0 50 100

STAGES OF CONSTRUCTION – STAGE 2

SHEET NO. 2 OF 3 SHEETS | STA. 700+44.8 TO STA. 706+42.0

F.A.P. RTE.	SECTION	COUNTY	TOTAL SHEETS	SHEET NO.
361	06-00214-27-BR	KANE	87	18
		CONTRACT NO. 63595		
FED. ROAD DIST. NO. 1	ILLINOIS	FED. AID PROJECT		

FINAL SURVEY — NOTE BOOK — SURVEYED — PLOTTED — TEMPLATE — AREAS — NO. — BY — DATE — AREAS CHECKED

ORIGINAL SURVEY — NOTE BOOK — SURVEYED — PLOTTED — TEMPLATE — AREAS — NO. — BY — DATE — AREAS CHECKED

NOTE:

1. ALL PAVEMENT MARKINGS ON FINAL PAVEMENT SHALL BE TYPE III TAPE, OTHERWISE ALL PAVEMENT MARKINGS WILL BE TEMPORARY PAVEMENT MARKINGS.
2. ALL DIAMOND SHAPE CONSTRUCTION WARNING SIGNS SHALL BE 48" X 48" UNLESS OTHERWISE NOTED.
3. CONSTRUCT PAVEMENT GRINDING / TEMPORARY PAVEMENT RAMPS TO PROVIDE MAINTENANCE OF TRAFFIC TRANSITIONS BETWEEN STAGES. THIS WORK SHALL NOT BE PAID FOR SEPARATELY, BUT SHALL BE INCLUDED IN THE UNIT BID PRICES OF THE CONTRACT, AND NO ADDITIONAL COMPENSATION WILL BE ALLOWED.
4. PAVEMENT MARKING OFFSETS AND STATIONING SHOULD FOLLOW PAVEMENT MARKING AND SIGNING PLAN UNLESS CALLED OUT OTHERWISE.
5. REMAINING CONCRETE PAVEMENT SQUARES SHOULD BE PAVED IN ACCORDANCE WITH DETAIL 701301 "LANE CLOSURE, 2L, 2W, SHORT TIME OPERATION" AT THE DIRECTION OF ENGINEER.
6. AFTER ALL PAVING HAS BEEN COMPLETE ALL WORK ZONE PAVEMENT MARKINGS SHALL BE REMOVED AND PERMANENT PAVEMENT MARKINGS PLACED.

LEGEND

- STAGE 3 PAVING
- PAVEMENT GRINDING / TEMPORARY PAVEMENT RAMPS
- TYPE II BARRICADES OR DRUMS WITH MONO-DIRECTIONAL STEADY-BURN LIGHTS @ 50' CTRS (25' SPACING IN TAPERS, 10' SPACING IN CORNER RADII)
- TYPE III BARRICADE WITH FLASHING LIGHTS
- PAVEMENT MARKING REMOVAL
- DIRECTION OF TRAFFIC PATTERNS

TYPICAL SIGN LAYOUT

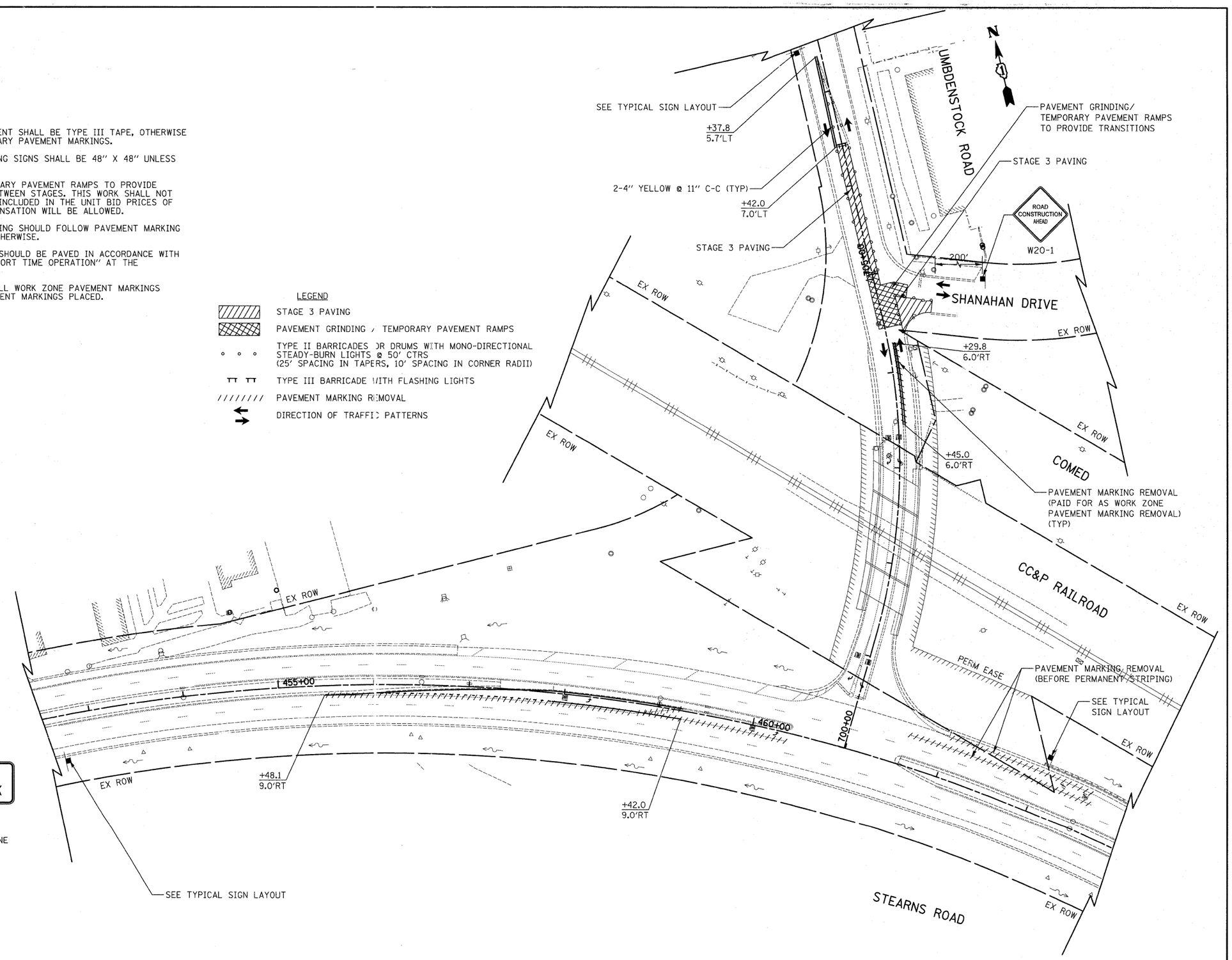

SEE TYPICAL SIGN LAYOUT

FINAL SURVEY — NOTE BOOK — NO. — SURVEYED — PLOTTED — TEMPLATE — AREAS — AREAS CHECKED — BY — DATE

ORIGINAL SURVEY — NOTE BOOK — NO. — SURVEYED — PLOTTED — TEMPLATE — AREAS — AREAS CHECKED — BY — DATE

CIVILTECH
450 E Devon Ave, Suite 300
Itasca, Illinois 60143
Tel: 630.773.3900 Fax: 630.773.3975
www.civiltechinc.com

DESIGNED	- PK	REVISED -
DRAWN	- PK	REVISED -
CHECKED	- RTM	REVISED -
DATE	- 3/25/2011	REVISED -

STATE OF ILLINOIS
DEPARTMENT OF TRANSPORTATION

SCALES
HORIZ. 0 50 100

STAGES OF CONSTRUCTION – STAGE 3

SHEET NO. 3 OF 3 SHEETS | STA. 700+44.8 TO STA. 706+42.0

F.A.P. RTE.	SECTION	COUNTY	TOTAL SHEETS	SHEET NO.
361	06-00214-27-BR	KANE	87	19
		CONTRACT NO. 63595		
FED. ROAD DIST. NO. 1	ILLINOIS	FED. AID PROJECT		

SEDIMENTATION AND EROSION CONTROL NOTES

1. UNLESS OTHERWISE INDICATED, ALL VEGETATIVE AND STRUCTURAL EROSION SEDIMENT CONTROL PRACTICES WILL BE CONSTRUCTED ACCORDING TO MINIMUM STANDARDS AND SPECIFICATIONS IN THE ILLINOIS URBAN MANUAL REVISED JUNE 2010.

2. THE KANE-DUPAGE SOIL AND WATER CONSERVATION DISTRICT (KDSWCD) MUST BE NOTIFIED ONE WEEK PRIOR TO THE PRE-CONSTRUCTION CONFERENCE, ONE WEEK PRIOR TO THE COMMENCEMENT OF LAND DISTURBING ACTIVITIES, AND ONE WEEK PRIOR TO THE FINAL INSPECTION.

3. A COPY OF THE APPROVED EROSION AND SEDIMENT CONTROL PLAN SHALL BE MAINTAINED ON THE SITE AT ALL TIMES.

4. PRIOR TO COMMENCING LAND-DISTURBING ACTIVITIES IN AREAS OTHER THAN INDICATED ON THESE PLANS (INCLUDING BUT NOT LIMITED TO, ADDITIONAL PHASES OF DEVELOPMENT AND OFF-SITE BORROW OR WASTE AREAS) A SUPPLEMENTARY EROSION CONTROL PLAN SHALL BE SUBMITTED TO THE OWNER FOR REVIEW BY THE KDSWCD.

5. THE CONTRACTOR IS RESPONSIBLE FOR INSTALLATION OF ANY ADDITIONAL EROSION CONTROL MEASURES NECESSARY TO PREVENT EROSION AND SEDIMENTATION AS DETERMINED BY THE KDSWCD.

6. DURING DEWATERING OPERATIONS, WATER WILL BE PUMPED INTO SEDIMENT BASINS OR SILT TRAPS. DEWATERING DIRECTLY INTO FIELD TILES OR STORMWATER STRUCTURES IS PROHIBITED.

7. IT IS THE RESPONSIBILITY OF THE LANDOWNER AND/OR GENERAL CONTRACTOR TO INFORM ANY SUB-CONTRACTOR(S) WHO MAY PERFORM WORK ON THIS PROJECT, OF THE REQUIREMENTS IN IMPLEMENTING AND MAINTAINING THESE EROSION CONTROL PLANS AND THE NATIONAL POLLUTANT DISCHARGE ELIMINATION SYSTEM (NPDES) PERMIT REQUIREMENTS SET FORTH BY THE ILLINOIS EPA.

8. COMPETED SLOPES (SECTIONS OF ROAD EMBANKMENT) SHALL BE SEEDED AND MULCHED AS THE EXCAVATION PROCEEDS TO THE EXTENT CONSIDERED DESIRABLE AND PRACTICAL. UNDER NO CIRCUMSTANCES SHALL FINAL GRADING AND SHAPING BE PROLONGED SO THAT THE ENTIRE PROJECT CAN BE SEEDED AT ONE TIME.

9. SILT FENCE IS TO BE INSTALLED FOLLOWING THE COMPLETION AND STABILIZATION OF THE STORMWATER FACILITIES AND IS TO REMAIN IN PLACE UNTIL THE CONTRIBUTING AREA (OR UPLAND EMBANKMENT) IS STABILIZED.

10. PRIORITY SHALL BE GIVEN TO THE COMPLETION AND STABILIZATION OF DETENTION AREAS. ONCE THE CONTRIBUTING AREA IS STABILIZED THE BASIN MAY NEED TO BE CLEANED OUT, RESTORED AND THE FINAL PROPOSED GRADE MUST BE ACHIEVED.

NOTE:

1. STABILIZED CONSTRUCTION ENTRANCES SHALL BE CONSTRUCTED AT LOCATIONS DESIGNATED BY THE ENGINEER.

2. ALL AREAS SHALL BE RESTORED WITH SEEDING, CLASS 4 (MODIFIED) AND SEEDING, CLASS 5 (MODIFIED), EROSION CONTROL BLANKET, AND TOPSOIL FURNISH AND PLACE, 4" EXCEPT FOLLOWING:
   - LANDSCAPED MEDIANS SHALL HAVE TOPSOIL FURNISH AND PLACE, 24"
   - AREAS UP TO 30' BEHIND BACK OF CURB OR EDGE OF SHOULDER ALONG BOTH ROADS SHALL BE SEEDED WITH SEEDING, CLASS 2A (SEE SEEDING MAP)

3. EROSION CONTROL BLANKET (SPECIAL), FLOCCULATION LOGS AND FLOCCULATION POWDER SHALL BE INSTALLED ALONG THE PROJECT LIMITS WITHIN THE RAILROAD DRAINAGE SWALE TO CONTROL SEDIMENT RUNOFF, AT THE DIRECTION OF THE ENGINEER.

SEEDING MAP
(N.T.S.)

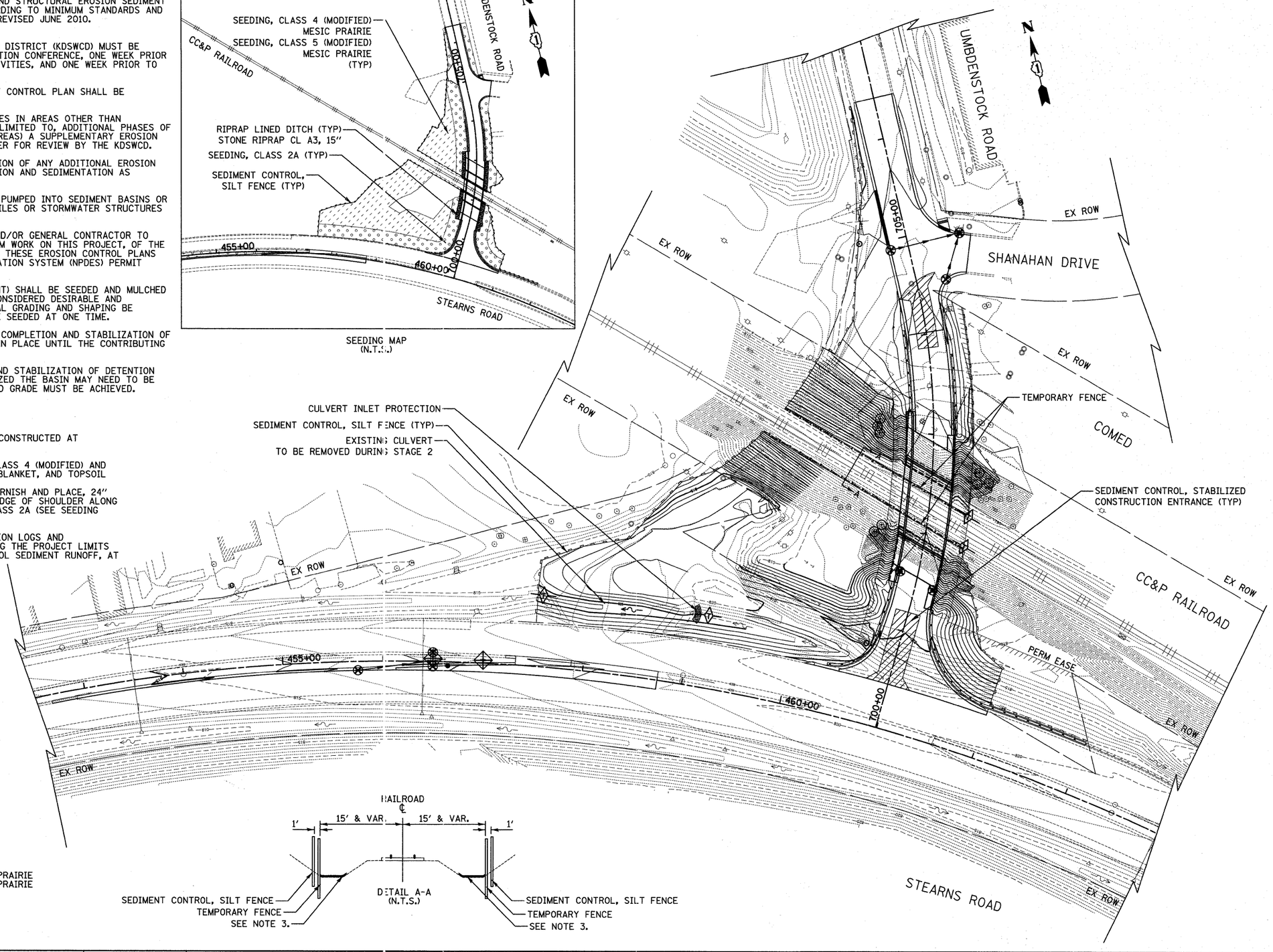

LEGEND

- TEMPORARY DITCH CHECKS
- INLET AND PIPE PROTECTION
- INLET FILTERS
- SEDIMENT CONTROL, SILT FENCE
- TEMPORARY FENCE
- EXISTING TREES
- TREE PROTECTION & PRESERVATION
- ROADWAY DITCH FLOW
- HIGH POINT DITCH FLOW
- SEDIMENT CONTROL, STABILIZED CONSTRUCTION ENTRANCE
- RIPRAP LINED DITCH
- SEEDING, CLASS 2A
- SEEDING, CLASS 4 (MODIFIED) MESIC PRAIRIE
  SEEDING, CLASS 5 (MODIFIED) MESIC PRAIRIE

DETAIL A-A
(N.T.S.)

FINAL SURVEY — NOTE BOOK — NO. — SURVEYED — PLOTTED — TOPS/LATE AREAS — AREAS CHECKED — BY — DATE

ORIGINAL SURVEY — NOTE BOOK — NO. — SURVEYED — PLOTTED — TOPS/LATE AREAS — AREAS CHECKED — BY — DATE

CIVILTECH
450 E Devon Ave, Suite 300
Itasca, Illinois 60143
Tel: 630.773.3900 Fax: 630.773.3975
www.civiltechinc.com

DESIGNED - PK	REVISED -	
DRAWN - PK	REVISED -	
CHECKED - RTM	REVISED -	
DATE - 3/25/2011	REVISED -	

STATE OF ILLINOIS
DEPARTMENT OF TRANSPORTATION

SCALES
HORIZ. 0 50 100

LANDSCAPING, EROSION CONTROL AND GRADING

SHEET NO. 1 OF 4 SHEETS | STA. 700+44.8 TO STA. 706+42.0

F.A.P. RTE.	SECTION	COUNTY	TOTAL SHEETS	SHEET NO.
361	06-00214-27-BR	KANE	87	20
		CONTRACT NO. 63595		
FED. ROAD DIST. NO. 1	ILLINOIS	FED. AID PROJECT		

AUTOCAD2006

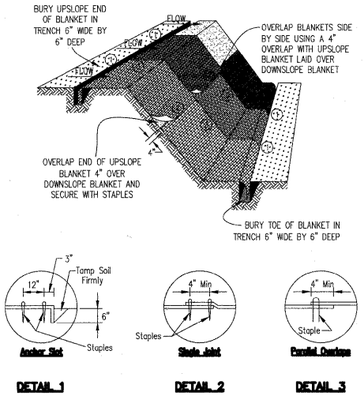

NOTES:

1. Staples shall be placed in a diamond pattern at 2 per s.y. for stiched blankets. Non-stiched shall use 4 staples per s.y. of material. This equates to 200 staples with stiched blanket and 400 stapels with non-stiched blanket per 100 s.y. of material.
2. Staple or push pin lengths shall be selected based on soil type and conditions. (minimum staple length is 6")
3. Erosion control material shall be placed in contact with the soil over a prepared seedbed.
4. All anchor slots shall be stapled at approximately 12" intervals.

Dwn D. GRASER	**EROSION CONTROL BLANKET INSTALLATION DETAILS**	Designed
Chkd		Checked
		Approved

SILT FENCE PLAN

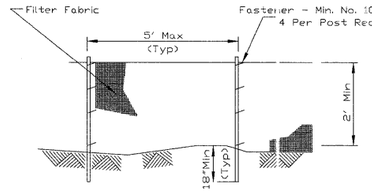

ELEVATION

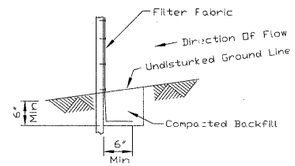

FABRIC ANCHOR DETAIL

NOTES:
1. Temporary sediment fence shall be installed prior to any grading work in the area to be protected. They shall be maintained throughout the construction period and removed in conjuction with the final grading and site stabilization.
2. Filter fabric shall meet the requirements of material specification 592 Geotextile Table 1 or 2, Class with equivalent opening size of at least 30 for nonwoven and 50 for woven.
3. Fence posts shall be either standard steel post or wood post with a minimum cross-sectional area of 3.0 sq. in.

REFERENCE		STANDARD DWG. NO.
Project	NRCS Natural Resources Conservation Service	IL-620
Designed ____ Date ____		SHEET 1 OF 2
Checked ____ Date ____		DATE 11-20-01
Approved ____ Date ____		

STABILIZED CONSTRUCTION ENTRANCE PLAN

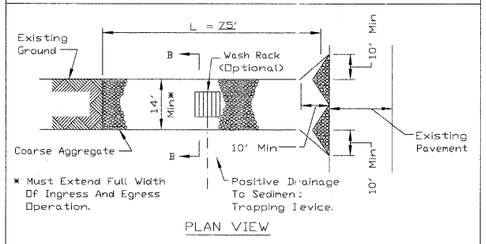

PLAN VIEW

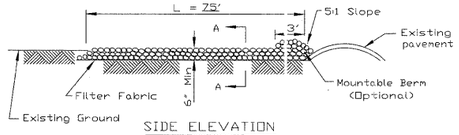

SIDE ELEVATION

NOTES:
1. Filter fabric shall meet the requirements of material specification 592 GEOTEXTILE, Table I or 2, Class , or and shall be placed over the cleared area prior to the placing of rock.
2. Rock or reclaimed concrete shall meet one of the following IDOT coarse aggregate gradation, CA-1, CA-2, CA-3 or CA-4 and be placed according to construction specification 25 ROCKFILL using placement Method 1 and Class compaction.
3. Any drainage facilities required because of washing shall be constructed according to manufacturers specifications.
4. If wash racks are used they shall be installed according to the manufacturer's specifications.

REFERENCE		STANDARD DWG. NO.
Project	NRCS Natural Resources Conservation Service	IL-630
Designed ____ Date ____		SHEET 1 OF 2
Checked ____ Date ____		DATE 8-18-94
Approved ____ Date ____		

SILT FENCE

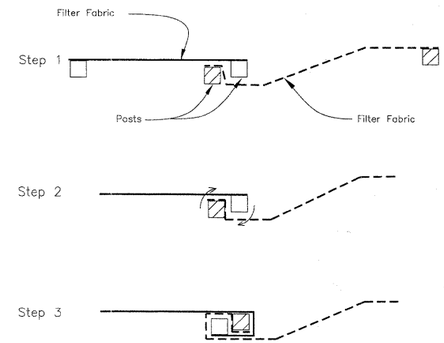

ATTACHING TWO SILT FENCES

NOTES:
1. Place the end post of the second fence inside the end post of the first fence.
2. Rotate both posts at least 180 degrees in a clockwise direction to create a tight seal with the fabric material.
3. Drive both posts a minimum of 18 inches into the ground and bury the flap.

REFERENCE		STANDARD DWG. NO.
Project	NRCS Natural Resources Conservation Service	IL-620(W)
Designed ____ Date ____		SHEET 2 OF 2
Checked ____ Date ____		DATE 1-29-99
Approved ____ Date ____		

STABILIZED CONSTRUCTION ENTRANCE PLAN

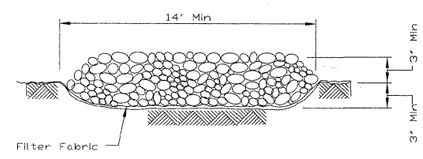

SECTION A-A

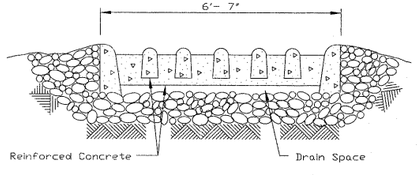

SECTION B-B

REFERENCE		STANDARD DWG. NO.
Project	NRCS Natural Resources Conservation Service	IL-630
Designed ____ Date ____		SHEET 2 OF 2
Checked ____ Date ____		DATE 8-18-94
Approved ____ Date ____		

ROCK CHECK DAM - RIPRAP

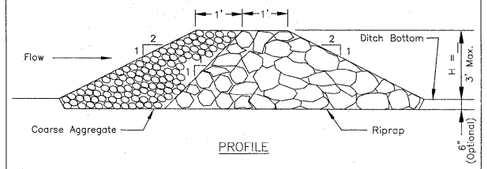

PROFILE

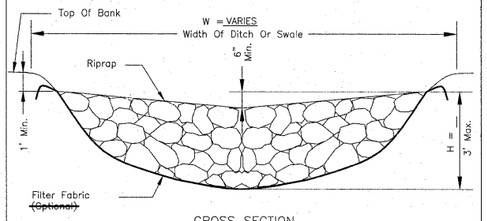

CROSS SECTION
CENTERLINE LOOKING DOWNSTREAM

NOTES;
1. Filter fabric shall meet the requirements of material specification 592 GEOTEXTILE, Table 1 or 2, Class I, II, or IV and shall be placed over the cleared area prior to the placing of rock.
2. Coarse aggregate shall meet one of the following IDOT gradations, CA-1, CA-2, CA-3, or CA-4.
3. Riprap shall meet IDOT gradation RR-3 or RR-4 and meet Quality Designation A.
4. Coarse aggregate and riprap shall be placed according to construction specification 25 ROCKFILL using placement Method 1 and Class III compaction.
5. For added stability, the base of the dam may be keyed 6 inches into the soil.
6. See plans for spacing of dams and H dimensions.
7. Maximum drainage area to each dam is 10 acres.
8. ROCK CHECK DAM-COARSE AGGREGATE IL-605CA may be used for drainage areas under 2 acres.

REFERENCE		STANDARD DWG. NO.
Project	NRCS Natural Resources Conservation Service	IL-605R
Designed ____ Date ____		SHEET 1 OF 1
Checked ____ Date ____		DATE 1-29-99
Approved ____ Date ____		

CULVERT INLET PROTECTION - STONE

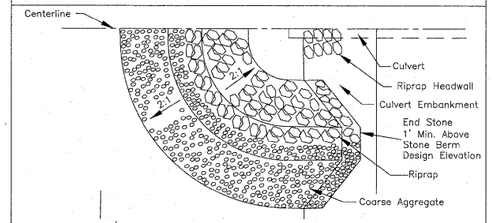

HALF PLAN VIEW

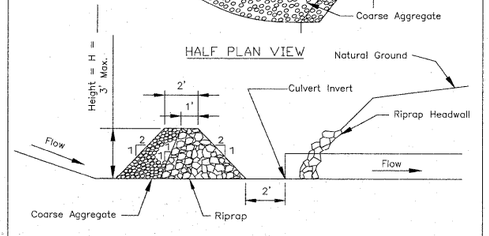

CENTERLINE CROSS SECTION

Notes:
1. Sediment shall be removed when the sediment has accumulated to one-half the height of the stone berm.
2. Coarse aggregate shall meet one of the following IDOT coarse aggregate gradations, CA-1, CA-2, CA-3 or CA-4.
3. Riprap shall meet IDOT gradation RR-3 or RR-4. Any permanent riprap, such as for the culvert headwall, shall meet IDOT Quality Designation A.
4. Coarse aggregate and riprap shall be placed according to construction specification 25 ROCKFILL using placement Method 1 and Class III compaction.
5. The maximum drainage area to the culvert being protected is 3 acres.
6. See plans for H dimension.
7. Tie the stone berm into the culvert embankment a minimum of 1 foot above the design elevation of the stone berm.

REFERENCE		STANDARD DWG. NO.
Project	NRCS Natural Resources Conservation Service	IL-508ST
Designed ____ Date ____		SHEET 1 OF 1
Checked ____ Date ____		DATE 1-29-99
Approved ____ Date ____		

FINAL SURVEY / ORIGINAL SURVEY
NOTE BOOK
NO.
SURVEYED
PLOTTED
TEMPLATE
AREAS
AREAS CHECKED
BY
DATE

CIVILTECH
450 E Devon Ave, Suite 300
Itasca, Illinois 60143
Tel: 630.773.3900 Fax: 630.773.3975
www.civiltechinc.com

DESIGNED	- PK	REVISED -
DRAWN	- PK	REVISED -
CHECKED	- RTM	REVISED -
DATE	- 3/25/2011	REVISED -

STATE OF ILLINOIS
DEPARTMENT OF TRANSPORTATION

LANDSCAPING AND EROSION CONTROL

SHEET NO. 2 OF 4 SHEETS | STA. | TO STA.

F.A.P. RTE.	SECTION	COUNTY	TOTAL SHEETS	SHEET NO.
361	06-00214-27-BR	KANE	87	21
		CONTRACT NO. 63595		
FED. ROAD DIST. NO. 1	ILLINOIS	FED. AID PROJECT		

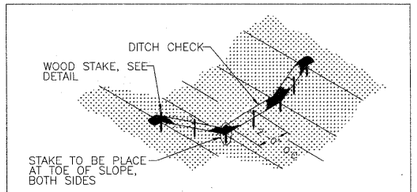

TEMPORARY DITCH CHECK, ROLLED EXCELSIOR DETAIL
N.T.S.

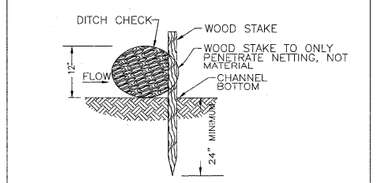

STAKE DETAILS
N.T.S.

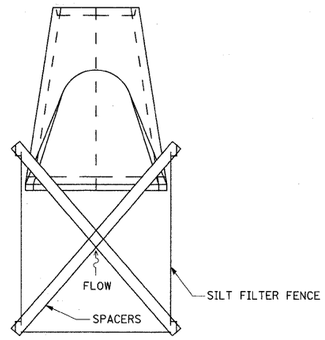

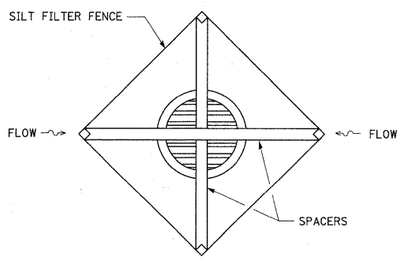

INLET AND PIPE PROTECTION DETAIL
N.T.S.

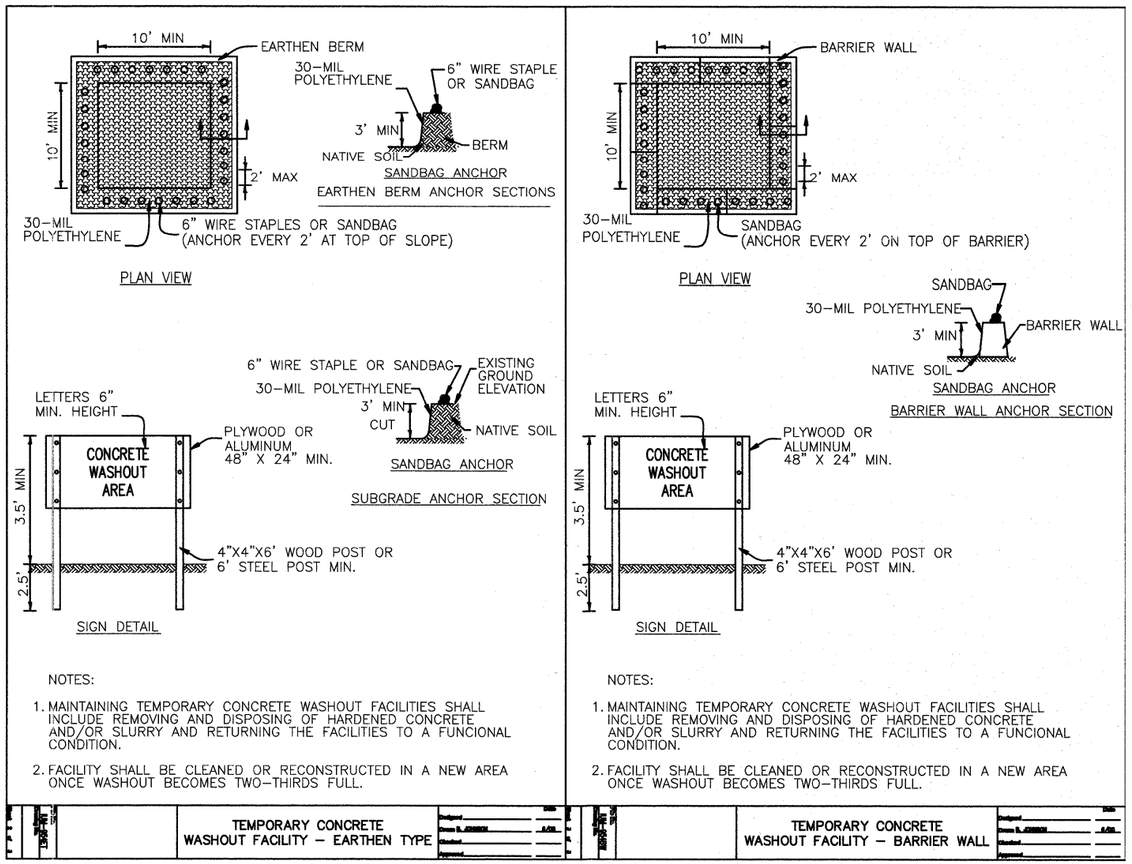

FINAL SURVEY — NOTE BOOK — NO. — SURVEYED — PLOTTED — TEMPLATE — AREAS — AREAS CHECKED — BY — DATE

ORIGINAL SURVEY — NOTE BOOK — NO. — SURVEYED — PLOTTED — TEMPLATE — AREAS — AREAS CHECKED — BY — DATE

CIVILTECH
450 E Devon Ave, Suite 300
Itasca, Illinois 60143
Tel: 630.773.3900 Fax: 630.773.3975
www.civiltechinc.com

DESIGNED	- PK	REVISED -
DRAWN	- PK	REVISED -
CHECKED	- RTM	REVISED -
DATE	- 3/25/2011	REVISED -

STATE OF ILLINOIS
DEPARTMENT OF TRANSPORTATION

LANDSCAPING AND EROSION CONTROL

SHEET NO. 3 OF 4 SHEETS STA. TO STA.

F.A.P. RTE.	SECTION	COUNTY	TOTAL SHEETS	SHEET NO.
361	06-00214-27-BR	KANE	87	22
		CONTRACT NO. 63595		
FED. ROAD DIST. NO. 1	ILLINOIS	FED. AID PROJECT		

INLET FOR UNDERGROUND OUTLET - PLASTIC

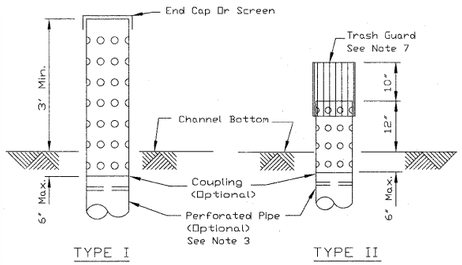

INLET ALTERNATIVES

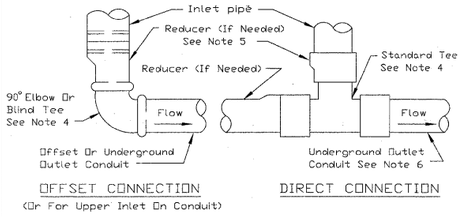

OFFSET CONNECTION
(Or For Upper Inlet On Conduit)

DIRECT CONNECTION

CONNECTION OF INLET TO CONDUIT

REFERENCE		STANDARD DWG. NO.
Project	NRCS Natural Resources Conservation Service	IL-544
Designed ____ Date ____		SHEET 1 OF 2
Checked ____ Date ____		DATE 8-17-94
Approved ____ Date ____		

INLET FOR UNDERGROUND OUTLET - PLASTIC

NOTES:
1. Plastic Pipe: Polyvinyl Chloride (PVC) or High Density Polyethylene (PE) pipe with SDR equal to 43 or less.
2. The above ground portion of the inlet, must have holes evenly spaced around the circumference of the pipe, as shown below:

Inlet Diameter (Inches)	Minimum Number Of 1" Diam. Holes Per Ft. Of Inlet
5	25
6	30
8	40
10	50
12	60

3. The below ground portion of the inlet, may be perforated with holes 5/16 inch diameter or less, to provide drainage around the inlet.
4. The tee or elbow diameter must be equal to or larger than the diameter of the conduit downstream from inlet.
5. Install a reducer immediately above the tee or elbow if the inlet diameter is greater than the diameter of the tee or elbow.
6. The underground outlet conduit, must be installed deep enough to provide a minimum 24" of cover (after construction) to prevent crushing.
7. The trash guard for Type II inlets shall be securely fastened to the inlet. Trash guards may be fabricated from metal rods (1/8" diameter or larger) or galvanized welded wire fabric (16 gage or larger). The spacing between vertical members should be 1 inch.

REFERENCE		STANDARD DWG. NO.
Project		IL-544
Designed ____ Date ____		SHEET 2 OF 2
Checked ____ Date ____		DATE 8-17-94
Approved ____ Date ____		

TEMPORARY SEDIMENT TRAP

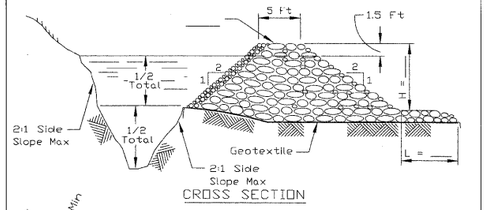

CROSS SECTION

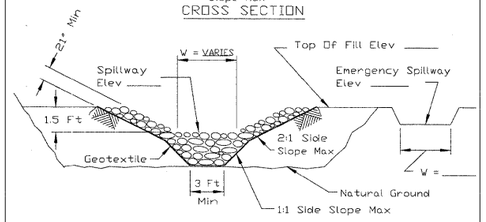

STONE SECTION

NOTES:
1. If the sediment pool is formed or enlarged the side slope will be 2:1 or flatter.
2. The fill shall be constructed using IDOT RR-4 stone size. A 1' layer of IDOT CA-2 should be placed on the inside face to reduce the flow rate.
3. The rock will be placed according to construction specification 25 ROCKFILL. Placement will be by Method 1 and compaction will be class III.
4. The geotextile shall meet the requirements in material specification 592 GEOTEXTILE table 1 or 2, class I, II or IV.

REFERENCE		STANDARD DWG. NO.
Project	NRCS Natural Resources Conservation Service	IL-660
Designed ____ Date ____		SHEET 1 OF 1
Checked ____ Date ____		DATE 11-20-01
Approved ____ Date ____		

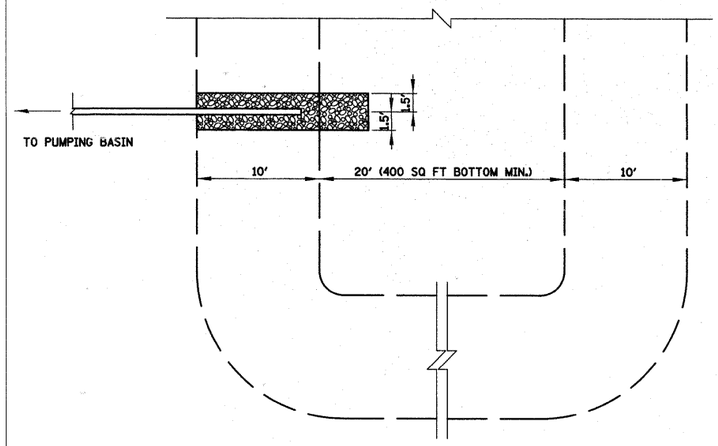

PLAN VIEW

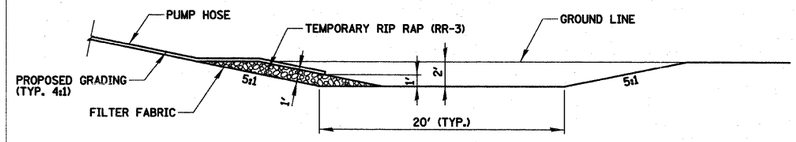

SECTION

TEMPORARY SUMP PIT DETAIL
N.T.S.

NOTE:
ALL OPEN LID MANHOLES, INLETS AND CATCH BASINS REGARDLESS OF WHETHER THEY ARE DESIGNATED TO BE PROTECTED WITH INLET AND PIPE PROTECTION, ARE TO USE A DRAINAGE STRUCTURE INLET FILTER ASSEMBLY, CONSISTING OF A FRAME AND FILTER BAG, TO COLLECT SEDIMENT IN THE SURFACE STORMWATER RUNOFF AT LOCATIONS SHOWN ON THE PLANS OR AS DIRECTED BY THE ENGINEER. THIS WORK SHALL BE PAID FOR SEPARATELY.

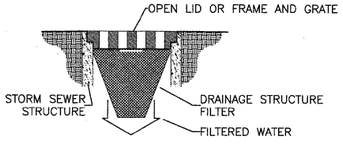

INLET FILTER

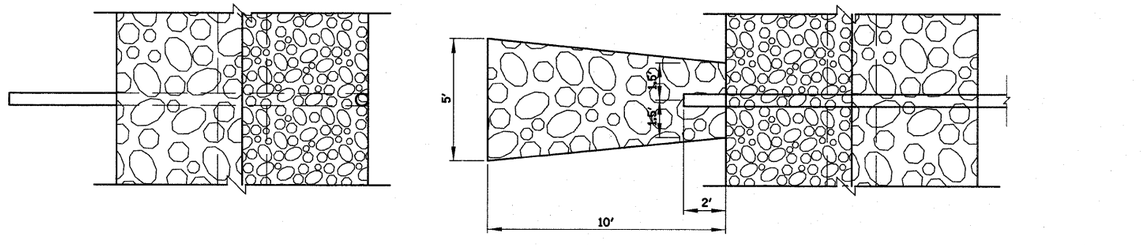

PLAN VIEW

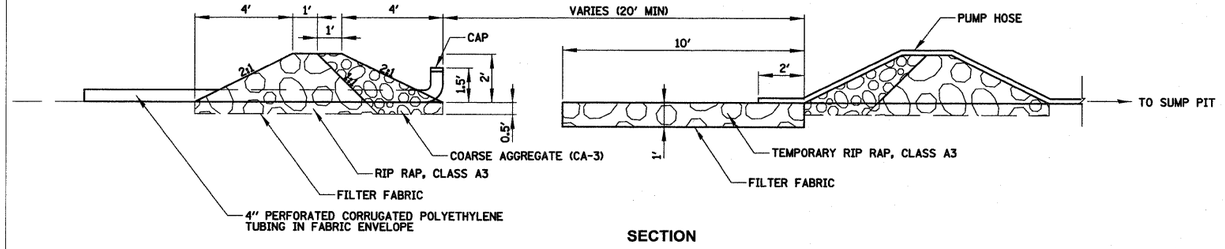

SECTION

TEMPORARY PUMPING BASIN DETAIL
N.T.S.

CIVILTECH
450 E Devon Ave, Suite 300
Itasca, Illinois 60143
Tel: 630.773.3900 Fax: 630.773.3975
www.civiltechinc.com

DESIGNED - PK	REVISED -	
DRAWN - PK	REVISED -	
CHECKED - RTM	REVISED -	
DATE - 3/25/2011	REVISED -	

STATE OF ILLINOIS
DEPARTMENT OF TRANSPORTATION

LANDSCAPING AND EROSION CONTROL

SHEET NO. 4 OF 4 SHEETS | STA. | TO STA.

F.A.P. RTE.	SECTION	COUNTY	TOTAL SHEETS	SHEET NO.
361	06-00214-27-BR	KANE	87	23
		CONTRACT NO. 63595		
FED. ROAD DIST. NO. 1	ILLINOIS	FED. AID PROJECT		

FINAL SURVEY | SURVEYED | PLOTTED | TEMPLATE | AREAS | AREAS CHECKED | NOTE BOOK | NO. | BY | DATE

ORIGINAL SURVEY | SURVEYED | PLOTTED | TEMPLATE | AREAS | AREAS CHECKED | NOTE BOOK | NO. | BY | DATE

STORM WATER POLLUTION PREVENTION PLAN (SWPPP): UMBDENSTOCK ROAD OVER THE CC&P RAILROAD

THIS PLAN HAS BEEN PREPARED TO COMPLY WITH THE PROVISIONS OF THE NPDES PERMIT NUMBER ILR10, ISSUED BY THE ILLINOIS ENVIRONMENTAL PROTECTION AGENCY FOR STORM WATER DISCHARGES FROM CONSTRUCTION SITE ACTIVITIES.

I. SITE DESCRIPTION:

A. THE FOLLOWING IS A DESCRIPTION OF THE PROJECT LOCATION:

THE PROJECT IS LOCATED AT UMBDENSTOCK ROAD AT THE INTERSECTION WITH STEARNS ROAD LOCATED IN THE VILLAGE OF SOUTH ELGIN, KANE COUNTY, ILLINOIS.

B. THE FOLLOWING IS A DESCRIPTION OF THE CONSTRUCTION ACTIVITY WHICH IS THE SUBJECT OF THIS PLAN:

1. BRIDGE RELOCATION.
2. PCC AND HMA PAVEMENT CONSTRUCTION.
3. UTILITY RELOCATION.
4. STORM SEWER CONSTRUCTION.

C. THE FOLLOWING IS A DESCRIPTION OF THE INTENDED SEQUENCE OF MAJOR ACTIVITIES WHICH WILL DISTURB SOILS FOR MAJOR PORTIONS OF THE CONSTRUCTION SITE, SUCH AS GRUBBING, EXCAVATION AND GRADING:

1. EARTH EXCAVATION.
2. STORM SEWER CONSTRUCTION.
3. BRIDGE CONSTRUCTION.
4. PAVEMENT AND BRIDGE REMOVAL.
5. UTILITY RELOCATION.
6. PAVEMENT CONSTRUCTION.
7. TERRACE RECONSTRUCTION/TERRACE GRADING.

D. THE TOTAL AREA OF THE CONSTRUCTION SITE IS ESTIMATED TO BE 6.0 ACRES.

THE TOTAL AREA OF THE SITE THAT IS ESTIMATED WILL BE DISTURBED BY EXCAVATION, GRADING OR OTHER ACTIVITIES IS 2.7 ACRES.

E. THE FOLLOWING IS A WEIGHTED AVERAGE OF THE RUNOFF COEFFICIENT FOR THIS PROJECT AFTER CONSTRUCTION ACTIVITIES ARE COMPLETED: 0.46

F. THE FOLLOWING IS A DESCRIPTION OF THE SOIL TYPES FOUND AT THE PROJECT SITE FOLLOWED BY INFORMATION REGARDING THEIR EROSIVITY:

THE EROSIVITY INDEX OF 4.71 HAS BEEN DETERMINED FOR A CONSTRUCTION PERIOD OF 10/15/2011-10/30/2011.

G. THE FOLLOWING IS A DESCRIPTION OF POTENTIALLY EROSIVE AREAS ASSOCIATED WITH THIS PROJECT:

EXISTING SOIL REMOVAL AND REPLACEMENT WILL BE PERFORMED AS NECESSARY. HIGH WATER LEVEL ACROSS THE PROJECT AREA MAY CREATE EROSIVE CONDITIONS WHILE EXCAVATING. DITCH LINES AND AREAS ADJACENT TO RAILROAD WILL BE SUBJECT TO POTENTIALLY EROSIVE CONDITIONS WHILE THOSE AREAS ARE BEING CONSTRUCTED OR REGRADED.

H. THE FOLLOWING IS A DESCRIPTION OF SOIL DISTURBING ACTIVITIES, THEIR LOCATIONS, AND THEIR EROSIVE FACTORS (E.G. STEEPNESS OF SLOPES, LENGTH OF SLOPES, ETC):

THE SOIL DISTURBING ACTIVITIES ARE LISTED ABOVE UNDER LETTER "C". NO SLOPES STEEPER THAN 3:1 ARE ANTICIPATED DURING THIS CONSTRUCTION.

I. SEE THE EROSION CONTROL PLANS AND/OR DRAINAGE PLANS FOR THIS CONTRACT FOR INFORMATION REGARDING DRAINAGE PATTERNS, APPROXIMATE SLOPES ANTICIPATED BEFORE AND AFTER MAJOR GRADING ACTIVITIES, LOCATIONS WHERE VEHICLES ENTER OR EXIT THE SITE AND CONTROLS TO PREVENT OFFSITE SEDIMENT TRACKING (TO BE ADDED AFTER CONTRACTOR IDENTIFIES LOCATIONS), AREAS OF SOIL DISTURBANCE, THE LOCATION OF MAJOR STRUCTURAL AND NON-STRUCTURAL CONTROLS IDENTIFIED IN THE PLAN, THE LOCATION OF AREAS WHERE STABILIZATION PRACTICES ARE EXPECTED TO OCCUR, SURFACE WATERS (INCLUDING WETLANDS) AND LOCATIONS WHERE STORM WATER IS DISCHARGED TO SURFACE WATER INCLUDING WETLANDS.

J. THE FOLLOWING IS A LIST OF RECEIVING WATER(S) AND THE ULTIMATE RECEIVING WATER(S), AND AREAL EXTENT OF WETLAND ACREAGE AT THE SITE. THE LOCATION OF THE RECEIVING WATERS CAN BE FOUND ON THE EROSION AND SEDIMENT CONTROL PLANS:

WATER FROM THE SITE IS A TRIBUTARY TO THE FOX RIVER.

K. THE FOLLOWING POLLUTANTS OF CONCERN WILL BE ASSOCIATED WITH THIS CONSTRUCTION PROJECT:

* SOIL SEDIMENT
* CONCRETE
* CONCRETE TRUCK WASTE
* CONCRETE CURING COMPOUNDS
* FERTILIZERS/PESTICIDES
* WASTE WATER FROM CLEANING CONSTRUCTION EQUIPMENT

II. CONTROLS:

THIS SECTION OF THE PLAN ADDRESSES THE CONTROLS THAT WILL BE IMPLEMENTED FOR EACH OF THE MAJOR CONSTRUCTION ACTIVITIES DESCRIBED IN I.C. ABOVE AND FOR ALL USE AREAS, BORROW SITES, AND WASTE SITES. FOR EACH MEASURE DISCUSSED, THE CONTRACTOR WILL BE RESPONSIBLE FOR ITS IMPLEMENTATION AS INDICATED. THE CONTRACTOR SHALL PROVIDE TO THE RESIDENT ENGINEER A PLAN FOR THE IMPLEMENTATION OF THE MEASURES INDICATED. THE CONTRACTOR, AND SUBCONTRACTORS, WILL NOTIFY THE RESIDENT ENGINEER OF ANY PROPOSED CHANGES, MAINTENANCE, OR MODIFICATIONS TO KEEP CONSTRUCTION ACTIVITIES COMPLIANT WITH THE PERMIT. EACH SUCH CONTRACTOR HAS SIGNED THE REQUIRED CERTIFICATION ON FORMS WHICH ARE ATTACHED TO, AND ARE A PART OF, THIS PLAN:

A. EROSION AND SEDIMENT CONTROLS

1. STABILIZED PRACTICES: PROVIDED BELOW IS A DESCRIPTION OF INTERIM AND PERMANENT STABILIZATION PRACTICES, INCLUDING SITE SPECIFIC SCHEDULING OF THE IMPLEMENTATION OF THE PRACTICES. SITE PLANS WILL ENSURE THAT EXISTING VEGETATION IS PRESERVED WHERE ATTAINABLE AND DISTURBED PORTIONS OF THE SITE WILL BE STABILIZED. STABILIZATION PRACTICES MAY INCLUDE BUT ARE NOT LIMITED TO: TEMPORARY SEEDING, PERMANENT SEEDING, MULCHING, GEOTEXTILES, SODDING, VEGETATIVE BUFFER STRIPS, PROTECTION OF TREES, PRESERVATION OF MATURE VEGETATION, AND OTHER APPROPRIATE MEASURES. EXCEPT AS PROVIDED BELOW IN II(A)(1)(a) AND II(A)(3), STABILIZATION MEASURES SHALL BE INITIATED AS SOON AS PRACTICABLE IN PORTIONS OF THE SITE WHERE CONSTRUCTION ACTIVITIES HAVE TEMPORARILY OR PERMANENTLY CEASED, BUT IN NO CASE MORE THAN 7 DAYS AFTER THE CONSTRUCTION ACTIVITY IN THAT PORTION OF THE SITE HAS TEMPORARILY OR PERMANENTLY CEASES ON ALL DISTURBED PORTIONS OF THE SITE WHERE CONSTRUCTION WILL NOT OCCUR FOR A PERIOD OF 14 OR MORE CALENDAR DAYS.

a. WHERE THE INITIATION OF STABILIZATION MEASURES BY THE 7TH DAY AFTER CONSTRUCTION ACTIVITY TEMPORARILY OR PERMANENTLY CEASES IS PRECLUDED BY SNOW COVER, STABILIZATION MEASURES SHALL BE INITIATED AS SOON AS PRACTICABLE THEREAFTER.

THE FOLLOWING STABILIZATION PRACTICES WILL BE USED FOR THIS PROJECT:

* PRESERVATION OF MATURE VEGETATION
* PROTECTION OF TREES
* TEMPORARY EROSION CONTROL SEEDING
* PERMANENT SEEDING
* EROSION CONTROL BLANKET / MULCHING
* GEOTEXTILES

DESCRIBE HOW THE STABILIZATION PRACTICES LISTED ABOVE WILL BE UTILIZED:

PRESERVATION OF MATURE VEGETATION AND PROTECTION OF TREES WILL BE UTILIZED WHERE APPLICABLE, TREE ROOT PRUNING, TREE PRUNING (1 TO 10 INCH DIAMETER), AND TREE PRUNING (OVER 10 INCH DIAMETER) IN ACCORDANCE WITH SECTION 201 OF THE IDOT "STANDARD SPECIFICATIONS FOR ROAD AND BRIDGE CONSTRUCTION" SHALL BE USED TO PRESERVE EXISTING TREES.

TEMPORARY EROSION CONTROL SEEDING SHALL BE USED TO PROTECT BARE EARTH WHILE CONSTRUCTION IS CONTINUING ELSEWHERE.

PERMANENT SEEDING SHALL BE APPLIED TO ALL AREAS SHOWN IN THE EROSION CONTROL AND LANDSCAPING PLANS.

EROSION CONTROL BLANKET AND MULCH, METHOD 2 WILL BE USED TO PREVENT EROSION, ASSIST IN GERMINATION OF THE SEEDS, AND PROTECT THE SEEDS. ALL AREAS RECEIVING PULVERIZED TOPSOIL, FERTILIZER, AND SEED SHALL BE COVERED.

GEOTEXTILES WILL BE PLACED IN ALL AREAS WITH UNSUITABLE SOILS UNDER THE POROUS GRANULAR EMBANKMENT.

2. STRUCTURAL PRACTICES: PROVIDED BELOW IS A DESCRIPTION OF STRUCTURAL PRACTICES THAT WILL BE IMPLEMENTED, TO THE DEGREE ATTAINABLE, TO DIVERT FLOWS FROM EXPOSED SOILS, STORE FLOWS OR OTHERWISE LIMIT RUNOFF AND THE DISCHARGE OF POLLUTANTS FROM EXPOSED AREAS OF THE SITE. SUCH PRACTICES MAY INCLUDE BUT ARE NOT LIMITED TO: PERIMETER EROSION BARRIER, EARTH DIKES, DRAINAGE SWALES, SEDIMENT TRAPS, DITCH CHECKS, SUBSURFACE DRAINS, PIPE SLOPE DRAINS, LEVEL SPREADERS, STORM DRAIN INLET PROTECTION, ROCK OUTLET PROTECTION, REINFORCED SOIL RETAINING SYSTEMS, GABIONS, AND TEMPORARY OR PERMANENT SEDIMENT BASINS. THE INSTALLATION OF THESE DEVICES MAY BE SUBJECT TO SECTION 404 OF THE CLEAN WATER ACT.

THE FOLLOWING STRUCTURAL PRACTICES WILL BE USED FOR THIS PROJECT:

* PERIMETER EROSION BARRIER
* TEMPORARY DITCH CHECK
* STORM DRAIN INLET PROTECTION
* STABILIZED CONSTRUCTION EXITS
* RIPRAP

DESCRIBE HOW THE STRUCTURAL PRACTICES LISTED ABOVE WILL BE UTILIZED:

PERIMETER EROSION BARRIER WILL BE PROVIDED ALONG THE PROJECT CONSTRUCTION LIMITS TO MINIMIZE POTENTIAL EROSION SEDIMENT RUNOFF WHERE INDICATED IN THE PLANS OR AS APPROVED BY THE ENGINEER.

TEMPORARY DITCH CHECKS WILL BE PLACED EVERY 100 FEET ALONG A DITCH LINE OR AS APPROVED BY THE ENGINEER TO MINIMIZE EROSION SEDIMENT RUNOFF.

STORM DRAIN INLET PROTECTION WILL BE PLACED AT STORM SEWER STRUCTURES PER THE EROSION CONTROL PLANS TO REDUCE SEDIMENT INFLITRATION AND DOWNSTREAM EROSION.

RIPRAP WILL BE USED AT THE LOCATION WHERE STORM WATER WILL FLOW OUT OF THE ENCLOSED DRAINAGE SYSTEM AND AT THE BOTTOM OF DITCHES THAT RUN ALONG MSE WALLS.

3. STORM WATER MANAGEMENT: PROVIDED BELOW IS A DESCRIPTION OF MEASURES THAT WILL BE INSTALLED DURING THE CONSTRUCTION PROCESS TO CONTROL POLLUTANTS IN STORM WATER DISCHARGES THAT WILL OCCUR AFTER CONSTRUCTION OPERATIONS HAVE BEEN COMPLETED. THE INSTALLATION OF THESE DEVICES MAY BE SUBJECT TO SECTION 404 OF THE CLEAN WATER ACT.

a. SUCH PRACTICES MAY INCLUDE BUT ARE NOT LIMITED TO: STORM WATER DETENTION STRUCTURES (INCLUDING WET PONDS), STORM WATER RETENTION STRUCTURES, FLOW ATTENUATION BY USE OF OPEN VEGETATED SWALES AND NATURAL DEPRESSIONS, INFILTRATION OF RUNOFF ON SITE, AND SEQUENTIAL SYSTEMS (WHICH COMBINE SEVERAL PRACTICES).

THE PRACTICES SELECTED FOR IMPLEMENTATION WERE DETERMINED ON THE BASIS OF THE TECHNICAL GUIDANCE IN SECTION 59-8 (EROSION AND SEDIMENT CONTROL) IN CHAPTER 59 (LANDSCAPE DESIGN AND EROSION CONTROL) OF THE ILLINOIS DEPARTMENT OF TRANSPORTATION BUREAU OF DESIGN AND ENVIRONMENT MANUAL. IF PRACTICES OTHER THAN THOSE DISCUSSED IN SECTION 59-8 ARE SELECTED FOR IMPLEMENTATION OR IF PRACTICES ARE APPLIED TO SITUATIONS DIFFERENT FROM THOSE COVERED IN SECTION 59-8, THE TECHNICAL BASIS FOR SUCH DECISIONS WILL BE EXPLAINED BELOW.

b. VELOCITY DISSIPATION DEVICES WILL BE PLACED AT DISCHARGE LOCATIONS AND ALONG THE LENGTH OF ANY OUTFALL CHANNEL AS NECESSARY TO PROVIDE A NON-EROSIVE VELOCITY FLOW FROM THE STRUCTURE TO A WATER COURSE SO THAT THE NATURAL PHYSICAL AND BIOLOGICAL CHARACTERISTICS AND FUNCTIONS ARE MAINTAINED AND PROTECTED (E.G. MAINTENANCE OF HYDROLOGIC CONDITIONS SUCH AS THE HYDROPERIOD AND HYDRODYNAMICS PRESENT PRIOR TO THE INITIATION OF CONSTRUCTION ACTIVITIES).

DESCRIPTION OF STORM WATER MANAGEMENT CONTROLS.

4. OTHER CONTROLS:

a. VEHICLE ENTRANCES AND EXITS - STABILIZED CONSTRUCTION ENTRANCES AND EXITS MUST BE CONSTRUCTED TO PREVENT TRACKING OF SEDIMENTS ONTO ROADWAYS.

THE CONTRACTOR WILL PROVIDE THE RESIDENT ENGINEER WITH A WRITTEN PLAN IDENTIFYING THE LOCATION OF STABILIZED ENTRANCES AND EXITS AND THE PROCEDURES (S)HE WILL USE TO CONSTRUCT AND MAINTAIN THEM.

b. MATERIAL DELIVERY, STORAGE, AND USE - THE FOLLOWING BMPS SHALL BE IMPLEMENTED TO HELP PREVENT DISCHARGES OF CONSTRUCTION MATERIALS DURING DELIVERY, STORAGE, AND USE:

* ALL PRODUCTS DELIVERED TO THE PROJECT SITE MUST BE PROPERLY LABELED.
* WATER TIGHT SHIPPING CONTAINERS AND/OR SEMI TRAILERS SHALL BE USED TO STORE HAND TOOLS, SMALL PARTS, AND MOST CONSTRUCTION MATERIALS THAT CAN BE CARRIED BY HAND, SUCH AS PAINT CANS, SOLVENTS, AND GREASE.
* A STORAGE/CONTAINMENT FACILITY SHOULD BE CHOSEN FOR LARGER ITEMS SUCH AS DRUMS AND ITEMS SHIPPED OR STORED ON PALLETS. SUCH MATERIAL IS TO BE COVERED BY A TIN ROOF OR LARGE SHEETS OF PLASTIC TO PREVENT PRECIPITATION FROM COMING IN CONTACT WITH THE PRODUCTS BEING STORED.
* LARGE ITEMS SUCH AS LIGHT STANDS, FRAMING MATERIALS AND LUMBER SHALL BE STORED IN THE OPEN IN A GENERAL STORAGE AREA. SUCH MATERIAL SHALL BE ELEVATED WITH WOOD BLOCKS TO MINIMIZE CONTACT WITH STORM WATER RUNOFF.
* SPILL CLEAN-UP MATERIALS, MATERIAL SAFETY DATA SHEETS, AN INVENTORY OF MATERIALS, AND EMERGENCY CONTACT NUMBERS SHALL BE MAINTAINED AND STORED IN ONE DESIGNATED AREA AND EACH CONTRACTOR IS TO INFORM HIS/HER EMPLOYEES AND THE RESIDENT ENGINEER OF THIS LOCATION.

c. STOCKPILE MANAGEMENT - BMPS SHALL BE IMPLEMENTED TO REDUCE OR ELIMINATE POLLUTION OF STORM WATER FROM STOCKPILES OF SOIL AND PAVING MATERIALS SUCH AS BUT NOT LIMITED TO PORTLAND CEMENT CONCRETE RUBBLE, ASPHALT CONCRETE, ASPHALT CONCRETE RUBBLE, AGGREGATE BASE, AGGREGATE SUB BASE, AND PRE-MIXED AGGREGATE. THE FOLLOWING BMPS MAY BE CONSIDERED:

* PERIMETER EROSION BARRIER
* TEMPORARY SEEDING
* TEMPORARY MULCH
* PLASTIC COVERS
* SOIL BINDERS
* STORM DRAIN INLET PROTECTION

THE CONTRACTOR WILL PROVIDE THE RESIDENT ENGINEER WITH A WRITTEN PLAN OF THE PROCEDURES (S)HE WILL USE ON THE PROJECT AND HOW THEY WILL BE MAINTAINED.

d. WASTE DISPOSAL. NO MATERIALS, INCLUDING BUILDING MATERIALS, SHALL BE DISCHARGED INTO WATERS OF THE STATE, EXCEPT AS AUTHORIZED BY A SECTION 404 PERMIT.

e. THE PROVISIONS OF THIS PLAN SHALL ENSURE AND DEMONSTRATE COMPLIANCE WITH APPLICABLE STATE AND/OR LOCAL WASTE DISPOSAL, SANITARY SEWER OR SEPTIC SYSTEM REGULATIONS.

f. THE CONTRACTOR SHALL PROVIDE A WRITTEN AND GRAPHIC PLAN TO THE RESIDENT ENGINEER IDENTIFYING WHERE EACH OF THE ABOVE AREAS WILL BE LOCATED AND HOW THEY ARE TO BE MANAGED.

5. APPROVED STATE OR LOCAL LAWS

THE MANAGEMENT PRACTICES, CONTROLS AND PROVISIONS CONTAINED IN THIS PLAN WILL BE IN ACCORDANCE WITH IDOT SPECIFICATIONS, WHICH ARE AT LEAST AS PROTECTIVE AS THE REQUIREMENTS CONTAINED IN THE ILLINOIS ENVIRONMENTAL PROTECTION AGENCY*S ILLINOIS URBAN MANUAL, 1995. PROCEDURES AND REQUIREMENTS SPECIFIED IN APPLICABLE SEDIMENT AND EROSION SITE PLANS OR STORM WATER MANAGEMENT PLANS APPROVED BY LOCAL OFFICIALS SHALL BE DESCRIBED OR INCORPORATED BY REFERENCE IN THE SPACE PROVIDED BELOW. REQUIREMENTS SPECIFIED IN SEDIMENT AND EROSION SITE PLANS, SITE PERMITS, STORM WATER MANAGEMENT SITE PLANS OR SITE PERMITS APPROVED BY LOCAL OFFICIALS THAT ARE APPLICABLE TO PROTECTING SURFACE WATER RESOURCES ARE, UPON SUBMITTAL OF AN NOI, TO BE AUTHORIZED TO DISCHARGE UNDER PERMIT ILR10 INCORPORATED BY REFERENCE AND ARE ENFORCEABLE UNDER THIS PERMIT EVEN IF THEY ARE NOT SPECIFICALLY INCLUDED IN THE PLAN.

DESCRIPTION OF PROCEDURES AND REQUIREMENTS SPECIFIED IN APPLICABLE SEDIMENT AND EROSION SITE PLANS OR STORM WATER MANAGEMENT PLANS APPROVED BY LOCAL OFFICIALS:

SEE EROSION CONTROL AND LANDSCAPING PLANS

III. MAINTENANCE:

THE FOLLOWING IS A DESCRIPTION OF PROCEDURES THAT WILL BE USED TO MAINTAIN, IN GOOD AND EFFECTIVE OPERATING CONDITIONS, THE VEGETATION, EROSION AND SEDIMENT CONTROL MEASURES AND OTHER PROTECTIVE MEASURES IDENTIFIED IN THIS PLAN. THE RESIDENT ENGINEER WILL PROVIDE MAINTENANCE GUIDES TO THE CONTRACTOR FOR THE PRACTICES ASSOCIATED WITH THIS PROJECT.

CONSTRUCTION EQUIPMENT SHALL BE STORED AND FUELED ONLY AT DESIGNATED LOCATIONS. ALL NECESSARY MEASURES SHALL BE TAKEN TO CONTAIN ANY FUEL OR POLLUTION RUNOFF IN COMPLIANCE WITH ENVIRONMENTAL LAW AND EPA WATER QUALITY REGULATIONS. LEAKING EQUIPMENT OR SUPPLIES SHALL BE IMMEDIATELY REPAIRED OR REMOVED FROM THE SITE. THE CONSTRUCTION FIELD ENGINEER ON A BI-WEEKLY BASIS SHALL INSPECT THE PROJECT TO DETERMINE THAT EROSION CONTROL EFFORTS ARE IN PLACE AND EFFECTIVE AND IF OTHER CONTROL IS NECESSARY. SEDIMENT COLLECTED DURING THE CONSTRUCTION BY VARIOUS TEMPORARY EROSION SYSTEMS SHALL BE DISPOSED ON THE SITE ON A REGULAR BASIS AS DIRECTED BY THE ENGINEER.

ALL EROSION CONTROL MEASURES WILL BE CHECKED WEEKLY AND AFTER EACH SIGNIFICANT RAINFALL (0.5 INCHES OR GREATER IN A 24 HOUR PERIOD.)

ALL MAINTENANCE OF THE EROSION CONTROL SYSTEMS WILL BE THE RESPONSIBILITY OF THE CONTRACTOR. ALL LOCATIONS WHERE VEHICLES ENTER AND EXIT THE CONSTRUCTION SITE AND ALL OTHER AREAS SUBJECT TO EROSION SHOULD ALSO BE INSPECTED PERIODICALLY. INSPECTION OF THESE AREAS SHALL BE MADE AT LEAST ONCE EVERY SEVEN DAYS AND WITHIN 24 HOURS OF THE END OF EACH 0.5 INCH OR GREATER RAINFALL.

IV. INSPECTIONS:

QUALIFIED PERSONNEL SHALL INSPECT DISTURBED AREAS OF THE CONSTRUCTION SITE WHICH HAVE NOT YET BEEN FINALLY STABILIZED, STRUCTURAL CONTROL MEASURES, AND LOCATIONS WHERE VEHICLES AND EQUIPMENT ENTER AND EXIT THE SITE. SUCH INSPECTIONS SHALL BE CONDUCTED AT LEAST ONCE EVERY SEVEN (7) CALENDAR DAYS AND WITHIN 24 HOURS OF THE END OF A STORM THAT IS 0.5 INCHES OR GREATER OR EQUIVALENT SNOWFALL.

A. DISTURBED AREAS, USE AREAS (STORAGE OF MATERIALS, STOCKPILES, MACHINE MAINTENANCE, FUELING, ETC.), BORROW SITES, AND WASTE SITES SHALL BE INSPECTED FOR EVIDENCE OF, OR THE POTENTIAL FOR, POLLUTANTS ENTERING THE DRAINAGE SYSTEM. EROSION AND SEDIMENT CONTROL MEASURES IDENTIFIED IN THE PLAN SHALL BE OBSERVED TO ENSURE THAT THEY ARE OPERATING CORRECTLY. DISCHARGE LOCATIONS OR POINTS THAT ARE ACCESSIBLE, SHALL BE INSPECTED TO ASCERTAIN WHETHER EROSION CONTROL MEASURES ARE EFFECTIVE IN PREVENTING SIGNIFICANT IMPACTS TO RECEIVING WATERS. LOCATIONS WHERE VEHICLES ENTER OR EXIT THE SITE SHALL BE INSPECTED FOR EVIDENCE OF OFF SITE SEDIMENT TRACKING.

B. BASED ON THE RESULTS OF THE INSPECTION, THE DESCRIPTION OF POTENTIAL POLLUTANT SOURCES IDENTIFIED IN SECTION I ABOVE AND POLLUTION PREVENTION MEASURES IDENTIFIED IN SECTION II ABOVE SHALL BE REVISED AS APPROPRIATE AS SOON AS PRACTICABLE AFTER SUCH INSPECTION. ANY CHANGES TO THIS PLAN RESULTING FROM THE REQUIRED INSPECTIONS SHALL BE IMPLEMENTED WITHIN 59/64 HOUR TO 1 WEEK BASED ON THE URGENCY OF THE SITUATION. THE RESIDENT ENGINEER WILL NOTIFY THE CONTRACTOR OF THE TIME REQUIRED TO IMPLEMENT SUCH ACTIONS THROUGH THE WEEKLY INSPECTION REPORT.

C. A REPORT SUMMARIZING THE SCOPE OF THE INSPECTION, NAME(S) AND QUALIFICATIONS OF PERSONNEL MAKING THE INSPECTION, THE DATE(S) OF THE INSPECTION, MAJOR OBSERVATIONS RELATING TO THE IMPLEMENTATION OF THIS STORM WATER POLLUTION PREVENTION PLAN, AND ACTIONS TAKEN IN ACCORDANCE WITH SECTION IV(B) SHALL BE MADE AND RETAINED AS PART OF THE PLAN FOR AT LEAST THREE (3) YEARS AFTER THE DATE OF THE INSPECTION. THE REPORT SHALL BE SIGNED IN ACCORDANCE WITH PART VI. G OF THE GENERAL PERMIT.

D. IF ANY VIOLATION OF THE PROVISIONS OF THIS PLAN IS IDENTIFIED DURING THE CONDUCT OF THE CONSTRUCTION WORK COVERED BY THIS PLAN, THE RESIDENT ENGINEER SHALL NOTIFY THE APPROPRIATE IEPA FIELD OPERATIONS SECTION OFFICE BY EMAIL AT: EPA.SWNONCOMP@ILLINOIS.GOV, TELEPHONE OR FAX WITHIN 24 HOURS OF THE INCIDENT. THE RESIDENT ENGINEER SHALL THEN COMPLETE AND SUBMIT AN "INCIDENCE OF NONCOMPLIANCE" (ION) REPORT FOR THE IDENTIFIED VIOLATION WITHIN 5 DAYS OF THE INCIDENT. THE RESIDENT ENGINEER SHALL USE FORMS PROVIDED BY THE ILLINOIS ENVIRONMENTAL PROTECTION AGENCY AND SHALL INCLUDE SPECIFIC INFORMATION ON THE CAUSE OF NONCOMPLIANCE, ACTIONS WHICH WERE TAKEN TO PREVENT ANY FURTHER CAUSES OF NONCOMPLIANCE, AND A STATEMENT DETAILING ANY ENVIRONMENTAL IMPACT WHICH MAY HAVE RESULTED FROM THE NONCOMPLIANCE. ALL REPORTS OF NONCOMPLIANCE SHALL BE SIGNED BY A RESPONSIBLE AUTHORITY IN ACCORDANCE WITH PART VI. G OF THE GENERAL PERMIT.

THE INCIDENCE OF NON-COMPLIANCE SHALL BE MAILED TO THE FOLLOWING ADDRESS:

ILLINOIS ENVIRONMENTAL PROTECTION AGENCY
DIVISION OF WATER POLLUTION CONTROL
ATTN: COMPLIANCE ASSURANCE SECTION
1021 NORTH GRAND EAST
POST OFFICE BOX 19276
SPRINGFIELD, ILLINOIS 62794-9276

V. NON-STORM WATER DISCHARGES:
EXCEPT FOR FLOWS FROM FIRE FIGHTING ACTIVITIES, SOURCES OF NON-STORM WATER THAT IS COMBINED WITH STORM WATER DISCHARGES ASSOCIATED WITH THE INDUSTRIAL ACTIVITY ADDRESSED IN THIS PLAN MUST BE DESCRIBED BELOW. APPROPRIATE POLLUTION PREVENTION MEASURES, AS DESCRIBED BELOW, WILL BE IMPLEMENTED FOR THE NON-STORM WATER COMPONENT(S) OF THE DISCHARGE.

A. SPILL PREVENTION AND CONTROL - BMPS SHALL BE IMPLEMENTED TO CONTAIN AND CLEAN-UP SPILLS AND PREVENT MATERIAL DISCHARGES TO THE STORM DRAIN SYSTEM. THE CONTRACTOR SHALL PRODUCE A WRITTEN PLAN STATING HOW HIS/HER COMPANY WILL PREVENT, REPORT, AND CLEAN UP SPILLS AND PROVIDE A COPY TO ALL OF HIS/HER EMPLOYEES AND THE RESIDENT ENGINEER. THE CONTRACTOR SHALL NOTIFY ALL OF HIS/HER EMPLOYEES ON THE PROPER PROTOCOL FOR REPORTING SPILLS. THE CONTRACTOR SHALL NOTIFY THE RESIDENT ENGINEER OF ANY SPILLS IMMEDIATELY.

B. CONCRETE RESIDUALS AND WASHOUT WASTES - THE FOLLOWING BMPS SHALL BE IMPLEMENTED TO CONTROL RESIDUAL CONCRETE, CONCRETE SEDIMENTS, AND RINSE WATER:
- TEMPORARY CONCRETE WASHOUT FACILITIES SHALL BE CONSTRUCTED FOR RINSING OUT CONCRETE TRUCKS. SIGNS SHALL BE INSTALLED DIRECTING CONCRETE TRUCK DRIVERS WHERE DESIGNATED WASHOUT FACILITIES ARE LOCATED.
- THE CONTRACTOR SHALL HAVE THE LOCATION OF TEMPORARY CONCRETE WASHOUT FACILITIES APPROVED BY THE RESIDENT ENGINEER.
- ALL TEMPORARY CONCRETE WASHOUT FACILITIES ARE TO BE INSPECTED BY THE CONTRACTOR AFTER EACH USE AND ALL SPILLS MUST BE REPORTED TO THE RESIDENT ENGINEER AND CLEANED UP IMMEDIATELY.
- CONCRETE WASTE SOLIDS/LIQUIDS SHALL BE DISPOSED OF PROPERLY.

C. LITTER MANAGEMENT - A PROPER NUMBER OF DUMPSTERS SHALL BE PROVIDED ON SITE TO HANDLE DEBRIS AND LITTER ASSOCIATED WITH THE PROJECT. THE CONTRACTOR IS RESPONSIBLE FOR ENSURING HIS/HER EMPLOYEES PLACE ALL LITTER INCLUDING MARKING PAINT CANS, SODA CANS, FOOD WRAPPERS, WOOD LATHE, MARKING RIBBON, CONSTRUCTION STRING, AND ALL OTHER CONSTRUCTION RELATED LITTER IN THE PROPER DUMPSTERS.

D. VEHICLE AND EQUIPMENT CLEANING - VEHICLES AND EQUIPMENT ARE TO BE CLEANED IN DESIGNATED AREAS ONLY, PREFERABLY OFF SITE.

E. VEHICLE AND EQUIPMENT FUELING - A VARIETY OF BMPS CAN BE IMPLEMENTED DURING FUELING OF VEHICLES AND EQUIPMENT TO PREVENT POLLUTION. THE CONTRACTOR SHALL INFORM THE RESIDENT ENGINEER AS TO WHICH BMPS WILL BE USED ON THE PROJECT. THE CONTRACTOR SHALL INFORM THE RESIDENT ENGINEER HOW (S)HE WILL BE INFORMING HIS/HER EMPLOYEES OF THESE BMPS (I.E. SIGNS, TRAINING, ETC.). BELOW ARE A FEW EXAMPLES OF THESE BMPS:
- CONTAINMENT
- SPILL PREVENTION AND CONTROL
- USE OF DRIP PANS AND ABSORBENTS
- AUTOMATIC SHUT-OFF NOZZLES
- TOPPING OFF RESTRICTIONS
- LEAK INSPECTION AND REPAIR

F. VEHICLE AND EQUIPMENT MAINTENANCE - ON SITE MAINTENANCE MUST BE PERFORMED IN ACCORDANCE WITH ALL ENVIRONMENTAL LAWS SUCH AS PROPER STORAGE AND NO DUMPING OF OLD ENGINE OIL OR OTHER FLUIDS ON SITE.

VI. FAILURE TO COMPLY:

FAILURE TO COMPLY WITH ANY PROVISIONS OF THIS STORM WATER POLLUTION PREVENTION PLAN WILL RESULT IN THE IMPLEMENTATION OF A NATIONAL POLLUTANT DISCHARGE ELIMINATION SYSTEM/EROSION AND SEDIMENT CONTROL DEFICIENCY DEDUCTION AGAINST THE CONTRACTOR AND/OR PENALTIES UNDER THE NPDES PERMIT WHICH COULD BE PASSED ONTO THE CONTRACTOR.

NOTES FOR CONSTRUCTION STAGING:

THE CONTRACTOR WILL BE PERMITTED TO BORROW AND/OR STOCKPILE IN AREAS OUTSIDE OF THE CURRENT STAGE OF CONSTRUCTION PROVIDED SOIL EROSION AND SEDIMENT CONTROL MEASURES ARE PROVIDED AT THE BORROW OR STOCKPILE SITE: THE CONTRACTOR'S LANDSCAPE RESTORATION & EROSION CONTROL PLAN MUST BE APPROVED PRIOR TO WORK BEGINNING AT THE BORROW OR STOCKPILE SITE.

PUMPING BASINS, IF TO BE UTILIZED, SHALL BE CONSTRUCTED PRIOR TO BEGINNING CONSTRUCTION. THE BASIN SHALL NOT BE REMOVED UNTIL THE SOIL HAS BEEN STABILIZED. ALL WATER SHALL BE PUMPED DIRECTLY INTO A PUMPING BASIN OR EQUIVALENT MEASURE FROM A SUMP LOCATED WITHIN THE WORK ZONE.

THE SOIL IN THE PUMPING BASINS SHALL BE EITHER PERMANENTLY OR TEMPORARILY STABILIZED PRIOR TO STARTING ANY UPSTREAM CONSTRUCTION. THE TYPE OF STABILIZATION REQUIRED WILL BE BASED ON THE PLANTING SEASON FOR THE PERMANENT STABILIZATION METHOD SHOWN ON THE LANDSCAPING PLANS AND THE TIME OF YEAR WORK HAS BEEN COMPLETED. THE TYPE OF STABILIZATION WILL BE APPROVED BY THE ENGINEER PRIOR TO CONSTRUCTION.

THIS PLAN HAS BEEN PREPARED TO COMPLY WITH THE PROVISIONS OF THE NPDES PERMIT NUMBER ILR10, ISSUED BY THE ILLINOIS ENVIRONMENTAL PROTECTION AGENCY FOR STORM WATER DISCHARGES FROM CONSTRUCTION SITE ACTIVITIES.

I CERTIFY UNDER PENALTY OF LAW THAT THIS DOCUMENT AND ALL ATTACHMENTS WERE PREPARED UNDER MY DIRECTION OR SUPERVISION IN ACCORDANCE WITH A SYSTEM DESIGNED TO ASSURE THAT QUALIFIED PERSONNEL PROPERLY GATHERED AND EVALUATED THE INFORMATION SUBMITTED. BASED ON MY INQUIRY OF THE PERSON OR PERSONS WHO MANAGE THE SYSTEM, OR THOSE PERSONS DIRECTLY RESPONSIBLE FOR GATHERING THE INFORMATION, THE INFORMATION SUBMITTED IS, TO THE BEST OF MY KNOWLEDGE AND BELIEF, TRUE, ACCURATE AND COMPLETE. I AM AWARE THAT THERE ARE SIGNIFICANT PENALTIES FOR SUBMITTING FALSE INFORMATION, INCLUDING THE POSSIBILITY OF FINE AND IMPRISONMENT FOR KNOWING VIOLATIONS.

CARL SCHOEDEL, P.E.	
PRINT NAME	SIGNATURE
COUNTY ENGINEER	MARCH 23, 2011
TITLE	DATE
KANE COUNTY D.O.T.	
AGENCY	

CONTRACTOR CERTIFICATION STATEMENT

THIS CERTIFICATION STATEMENT IS PART OF THE STORM WATER POLLUTION PREVENTION PLAN FOR THE PROJECT DESCRIBED BELOW, IN ACCORDANCE WITH GENERAL NPDES PERMIT NO. ILR10 ISSUED BY THE ILLINOIS ENVIRONMENTAL PROTECTION AGENCY.

I CERTIFY UNDER PENALTY OF LAW THAT I UNDERSTAND THE TERMS OF THE GENERAL NATIONAL POLLUTANT DISCHARGE ELIMINATION SYSTEM (NPDES) PERMIT (ILR 10) THAT AUTHORIZES THE STORM WATER DISCHARGES ASSOCIATED WITH INDUSTRIAL ACTIVITY FROM THE CONSTRUCTION SITE IDENTIFIED AS PART OF THIS CERTIFICATION.

IN ADDITION, I HAVE READ AND UNDERSTAND ALL OF THE INFORMATION AND REQUIREMENTS STATED IN THE STORM WATER POLLUTION PREVENTION PLAN FOR THE ABOVE MENTIONED PROJECT; I HAVE PROVIDED ALL DOCUMENTATION REQUIRED TO BE IN COMPLIANCE WITH THE ILR10 AND STORM WATER POLLUTION PREVENTION PLAN AND WILL PROVIDE TIMELY UPDATES TO THESE DOCUMENTS AS NECESSARY.

☐ CONTRACTOR
☐ SUB-CONTRACTOR

PRINT NAME	SIGNATURE
TITLE	DATE
NAME OF FIRM	TELEPHONE
STREET ADDRESS	CITY/STATE/ZIP

CONTRACTOR CERTIFICATION STATEMENT

THIS CERTIFICATION STATEMENT IS PART OF THE STORM WATER POLLUTION PREVENTION PLAN FOR THE PROJECT DESCRIBED BELOW, IN ACCORDANCE WITH GENERAL NPDES PERMIT NO. ILR10 ISSUED BY THE ILLINOIS ENVIRONMENTAL PROTECTION AGENCY.

I CERTIFY UNDER PENALTY OF LAW THAT I UNDERSTAND THE TERMS OF THE GENERAL NATIONAL POLLUTANT DISCHARGE ELIMINATION SYSTEM (NPDES) PERMIT (ILR 10) THAT AUTHORIZES THE STORM WATER DISCHARGES ASSOCIATED WITH INDUSTRIAL ACTIVITY FROM THE CONSTRUCTION SITE IDENTIFIED AS PART OF THIS CERTIFICATION.

IN ADDITION, I HAVE READ AND UNDERSTAND ALL OF THE INFORMATION AND REQUIREMENTS STATED IN THE STORM WATER POLLUTION PREVENTION PLAN FOR THE ABOVE MENTIONED PROJECT; I HAVE PROVIDED ALL DOCUMENTATION REQUIRED TO BE IN COMPLIANCE WITH THE ILR10 AND STORM WATER POLLUTION PREVENTION PLAN AND WILL PROVIDE TIMELY UPDATES TO THESE DOCUMENTS AS NECESSARY.

☐ CONTRACTOR
☐ SUB-CONTRACTOR

PRINT NAME	SIGNATURE
TITLE	DATE
NAME OF FIRM	TELEPHONE
STREET ADDRESS	CITY/STATE/ZIP

FINAL SURVEY | NOTE BOOK | NO. | SURVEYED | PLOTTED | TEMPLATE | AREAS CHECKED | BY | DATE

ORIGINAL SURVEY | NOTE BOOK | NO. | SURVEYED | PLOTTED | TEMPLATE | AREAS CHECKED | BY | DATE

CIVILTECH
450 E Devon Ave, Suite 300
Itasca, Illinois 60143
Tel: 630.773.3900 Fax: 630.773.3975
www.civiltechinc.com

DESIGNED	- PK	REVISED -
DRAWN	- PK	REVISED -
CHECKED	- RTM	REVISED -
DATE	- 3/25/2011	REVISED -

STATE OF ILLINOIS
DEPARTMENT OF TRANSPORTATION

STORM WATER POLLUTION PREVENTION PLAN

SHEET NO. 2 OF 2 SHEETS STA. TO STA.

F.A.P. RTE.	SECTION	COUNTY	TOTAL SHEETS	SHEET NO.
361	06-00214-27-BR	KANE	87	25
		CONTRACT NO. 63595		
FED. ROAD DIST. NO. 1	ILLINOIS	FED. AID PROJECT		

LEGEND:

- EXISTING DITCH FLOW
- EXISTING DITCH FLOW
- ADJ — STRUCTURE TO BE ADJUSTED
- R — STRUCTURE TO BE REMOVED

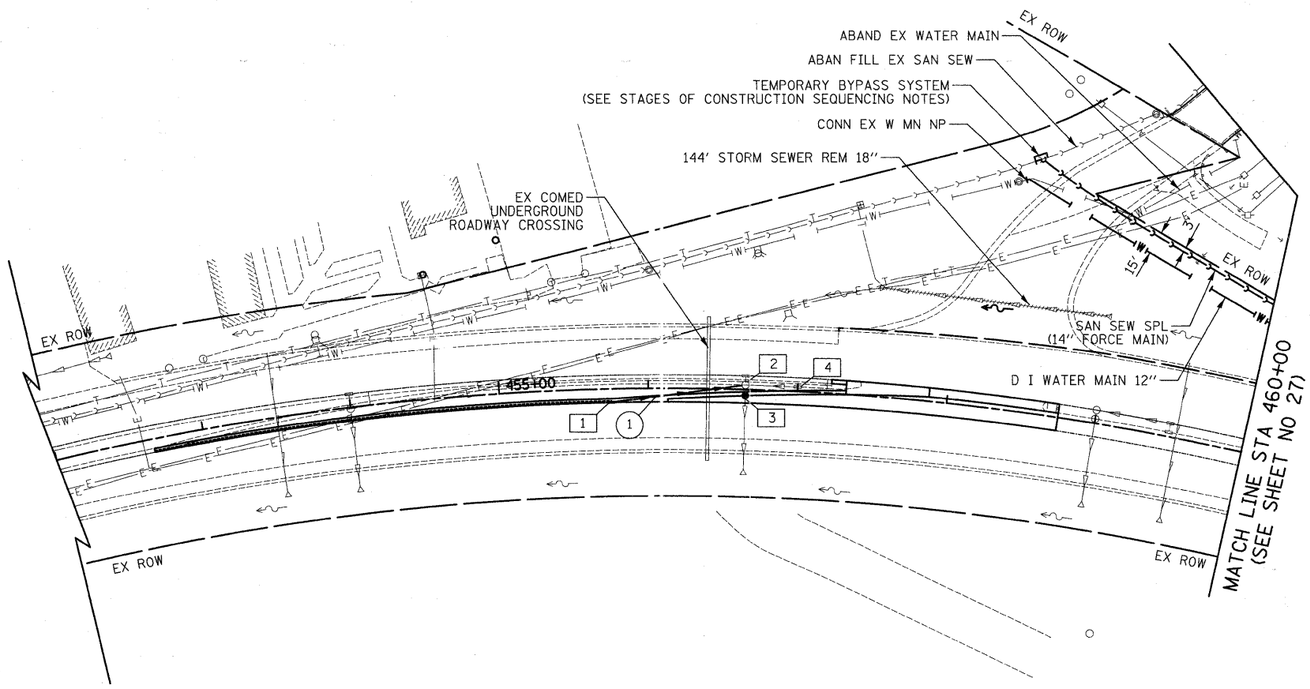

1. STA 455+75.0, 9.0' RT
   INLETS TA T24F&G
   RIM = 816.28
   INV = 813.33 (12" E)
2. STA 456+65.0, 3.0' RT
   CB ADJUST
   GRATES T8
   EX RIM = 816.81
   PR RIM = 817.24
   INV = 812.60 (12" W)
3. STA 456+65.0, 4.0' RT
   CB TA 4 DIA T24F&G
   RIM = 816.92
   INV = 812.48 (EX 12" N)
   INV = 812.46 (EX 12" S)
4. STA 457+00.0, 3.0' RT
   INLETS ADJUST
   GRATES T8
   EX RIM = 817.09
   PR RIM = 817.50

(1) 73' STORM SEW CL A 1, 12" @ 1.00%
TRENCH BACKFILL = 4 CU YD

STEARNS ROAD

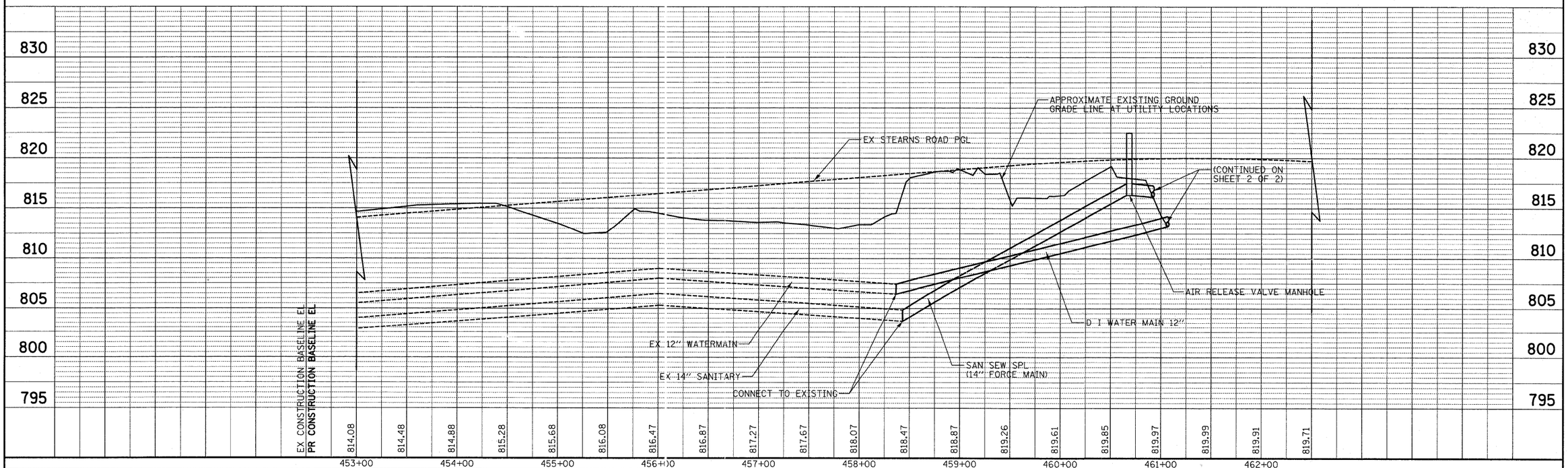

FINAL SURVEY — NOTE BOOK — NO. — SURVEYED — PLOTTED — TEMPLATE — AREAS — AREAS CHECKED — BY — DATE

ORIGINAL SURVEY — NOTE BOOK — NO. — SURVEYED — PLOTTED — TEMPLATE — AREAS — AREAS CHECKED — BY — DATE

CIVILTECH
450 E Devon Ave, Suite 300
Itasca, Illinois 60143
Tel: 630.773.3900 Fax: 630.773.3975
www.civiltechinc.com

DESIGNED	- PK	REVISED	-
DRAWN	- PK	REVISED	-
CHECKED	- RTM	REVISED	-
DATE	- 3/25/2011	REVISED	-

STATE OF ILLINOIS
DEPARTMENT OF TRANSPORTATION

SCALES
VERT. 0 5 10
HORIZ. 0 50 100

DRAINAGE AND UTILITIES

SHEET NO. 1 OF 2 SHEETS | STA. 453+00 | TO STA. 460+00

F.A.P. RTE.	SECTION	COUNTY	TOTAL SHEETS	SHEET NO.
361	06-00214-27-BR	KANE	87	26
		CONTRACT NO. 63595		
FED. ROAD DIST. NO. 1	ILLINOIS	FED. AID PROJECT		

5 STA 701+58.0, 18.0' LT
CB TC T20F&G
RIM = 819.09
INV = 814.93 (12" W)

6 STA 701+47.0, 18.0' RT
CB TA 4 DIA T20F&G
RIM = 819.19
INV = 811.83 (12" E)

7 STA 701+49.5, 29.1' RT
INLETS TA T24F&G
RIM = 816.58
INV = 813.15 (12" NE)

8 STA 704+90.0, 18.0' LT
INLETS TA T24F&G
RIM = 816.28
INV = 813.38 (12" E)

9 STA 704+91.3, 52.7' RT
CB TA 4 DIA T24F&G
RIM = 815.97
INV = 812.70 (12" SW)
INV = 812.70 (12" W)
INV = 812.6 (EX 12" NE)

10 STA 705+03.3, 47.0' LT
MAN TA 6 DIA T1F CL
RIM = 815.52
INV = APPROX. 799.24 (14" S) (MATCH EXISTING)
INV = APPROX. 799.24 (EX 14" SW) (TO BE ABANDONED)
INV = APPROX. 799.24 (EX 14" NE)

11 STA 700+71.5, 35.5' LT
AIR RELEASE VALVE MHL
RIM = 822.49
INV = 816.32 (14" W)
INV = 816.32 (14" E)
(SEE NOTE 1)

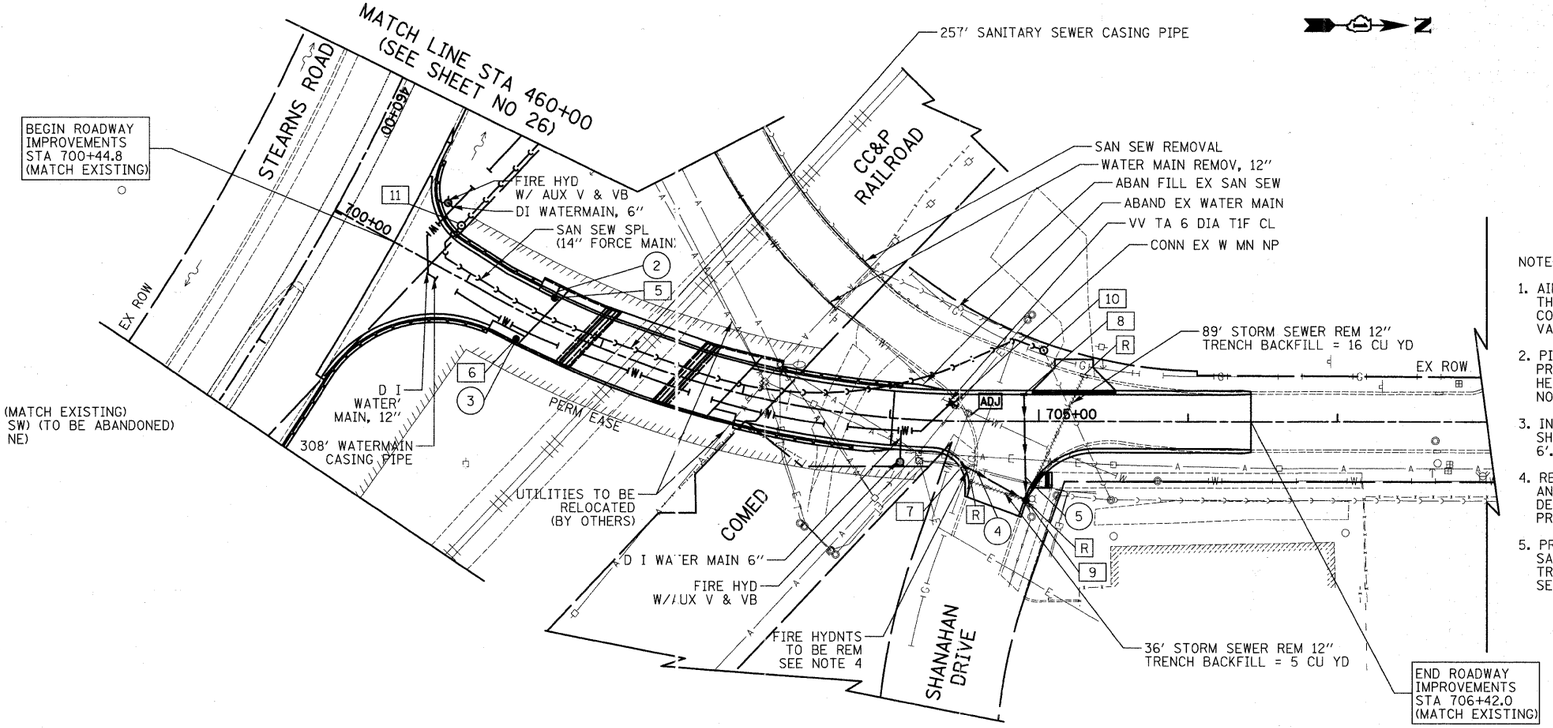

2 9' STORM SEW CL A 1, 12" @ 0.50%

3 2' STORM SEW CL A 1, 12" @ 1.00%

4 45' STORM SEW CL A 1, 12" @ 1.00%
TRENCH BACKFILL = 7 CU YD

5 68' STORM SEW CL A 1, 12" @ 1.00%
TRENCH BACKFILL = 7 CU YD

NOTE:

1. AIR AND VACUUM RELEASE VALVE SHALL BE PLACED AT THE HIGHEST POINT OF THE SANITARY SEWER PROFILE. CONTRACTOR SHALL PROVIDE AN ENCASEMENT FOR VANDAL PROTECTION.
2. PIPES EXPOSED TO THE ATMOSPHERE SHALL BE PROTECTED FROM FREEZING WITH INSULATION AND A HEAT TRACER (SEE DRAINAGE AND UTILITIES GENERAL NOTES AND DETAILS).
3. INSULATION FOR WATERMAIN AND SANITARY SEWER SHALL BE PROVIDED WHERE DEPTH COVER IS LESS THAN 6'.
4. REMOVE EXISTING FIRE HYDRANT AND AUXILIARY VALVE AND DELIVER TO SOUTH ELGIN'S PUBLIC WORKS DEPARTMENT. PLUG FIRE HYDRANT LEAD AT TEE AND PROVIDE THRUST BLOCK.
5. PROPOSED HEAT TRACING SHALL BE SERVICED BY THE SAME COMED METER THAT FEEDS THE EXISTING HEAT TRACING. NO STREET LIGHT SHALL BE FED BY THIS SERVICE AND METER.

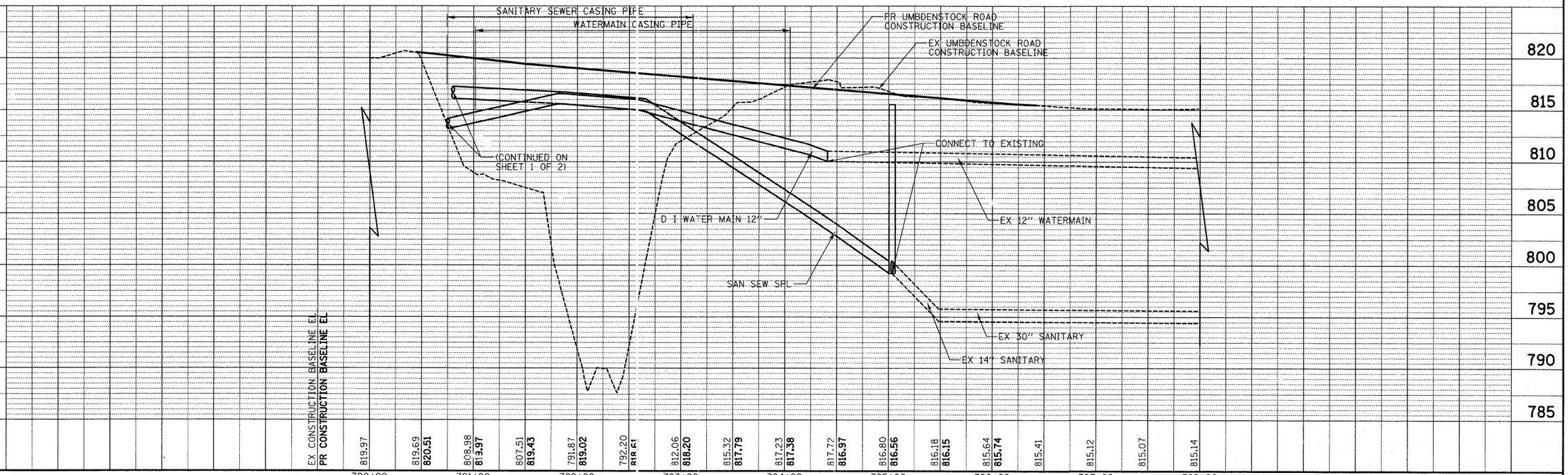

CIVILTECH	450 E Devon Ave, Suite 300 Itasca, Illinois 60143 Tel: 630.773.3900 Fax: 630.773.3975 www.civiltechinc.com	DESIGNED - PK	REVISED -
		DRAWN - PK	REVISED -
		CHECKED - RTM	REVISED -
		DATE - 3/25/2011	REVISED -

STATE OF ILLINOIS
DEPARTMENT OF TRANSPORTATION

SCALES
VERT. 0 5 10
HORIZ. 0 50 100

DRAINAGE AND UTILITIES

SHEET NO. 2 OF 2 SHEETS | STA. 700+00 | TO STA. 708+00

F.A.P. RTE.	SECTION	COUNTY	TOTAL SHEETS	SHEET NO.
361	06-00214-27-BR	KANE	87	27
		CONTRACT NO. 63595		
FED. ROAD DIST. NO. 1	ILLINOIS	FED. AID PROJECT		

FINAL SURVEY — NOTE BOOK — NO. — BY — DATE
SURVEYED — PLOTTED — ESTIMATE — AREAS — AREAS CHECKED

ORIGINAL SURVEY — NOTE BOOK — NO. — BY — DATE
SURVEYED — PLOTTED — ESTIMATE — AREAS — AREAS CHECKED

FINAL SURVEY		BY	DATE
	SURVEYED		
	PLOTTED		
NOTE BOOK	DRAWN		
	AREAS		
NO.	AREAS CHECKED		

FOX RIVER WATER RECLAMATION DISTRICT
MINIMUM PROJECT SPECIFICATION REQUIREMENTS

1. THE PROPOSED IMPROVEMENTS SHALL BE CONSTRUCTED ACCORDING TO THE ORDINANCE AND REQUIREMENTS OF THE "STATE STANDARD SPECIFICATION FOR WATER AND SEWER MAIN CONSTRUCTION IN ILLINOIS" CURRENT EDITION, AND THE FOX RIVER WATER RECLAMATION DISTRICT.

2. THE CONTRACTOR SHALL NOTIFY THE FOX RIVER WATER RECLAMATION DISTRICT 48 HOURS PRIOR TO START OF THE CONSTRUCTION TO ARRANGE FOR APPROPRIATE CONSTRUCTION INSPECTION.

3. THE FOX RIVER WATER RECLAMATION DISTRICT SHALL HAVE THE AUTHORITY TO INSPECT, APPROVE, AND REJECT THE CONSTRUCTION IMPROVEMENTS.

4. THE CONTRACTOR(S) SHALL INDEMNIFY THE FOX RIVER WATER RECLAMATION DISTRICT, THEIR AGENTS ETC. , FROM ALL LIABILITY INVOLVED WITH THE CONSTRUCTION, INSTALLATION AND TESTING OF THIS WORK ON THIS PROJECT.

5. THE PROPOSED IMPROVEMENTS MUST BE CONSTRUCTED IN ACCORDANCE WITH THE ENGINEERING PLANS AS APPROVED BY THE FRWRD.

6. SANITARY MANHOLE FRAMES SHALL BE NEENAH R-1772 WITH TYPE B SELF-SEALING RUBBER GASKET COVER WITH CONCEALED PICK HOLES OR EQUAL WITH THE WORD "SANITARY" CAST IN THE COVER.

7. THE EXTERIOR OF THE PROPOSED MANHOLES SHALL BE WATERPROOFED WITH A BITUMASTIC MATERIAL AS PER FRWRD ORDINANCE NO. 323, ARTICLE 4, SECTION 16.

8. ALL JOINTS BETWEEN PRE-CAST ELEMENTS, ADJUSTING RINGS AND MANHOLE FRAMES ON ALL UNDERGROUND STRUCTURES, SHALL BE SET IN PLACE WITH ONE OF THE FOLLOWING BUTYL RUBBER JOINT SEALANTS:
   CONCRETE PROJECTS SUPPLY CO. - EZ STIKS
   HAMILTON-KENT GASKET CO. - KENT SEAL
   OR EQUAL, AS APPROVED BY THE DISTRICT ENGINEER, AND ALL JOINTS TO BE TUCKPOINTED WITH HYDRAULIC CEMENT OR MORTAR WITH A BRUSH FINISH. ALL JOINTS BETWEEN ADJUSTING RINGS AND MANHOLE FRAMES TUCKPOINTED WITH HYDRAULIC CEMENT OR MORTAR WILL NOT BE ACCEPTED BY FRWRD.

9. ALL SANITARY SEWER MANHOLES SHALL BE CONSTRUCTED WITH FLEXIBLE MANHOLE COUPLING, AS MANUFACTURED BY INTERPACE CORPORATION (LOCKJOINT FLEXIBLE MANHOLE SLEEVE) , PRESS-SEAL GASKET CORPORATION (PRESS WEDGE II) , OR EQUAL AS APPROVED BY THE DISTRICT ENGINEER. ALL MATERIALS AND INSTALLATION PROCEDURES SHALL COMPLY WITH THOSE SPECIFIED BY THE MANUFACTURER.

10. A WATER-TIGHT PERMANENT MASONRY BULKHEAD SHALL BE INSTALLED IN THE DOWNSTREAM SEWER PIPE AT THE POINT OF SEWER CONNECTION PRIOR TO COMMENCING ANY SEWER CONSTRUCTION . THE BULKHEAD SHALL REMAIN IN PLACE UNTIL REMOVAL IS AUTHORIZED BY THE FOX RIVER WATER RECLAMATION DISTRICT AFTER THE SANITARY SEWERS HAVE BEEN TESTED AND ACCEPTED.

11. THE CONTRACTOR SHALL TAKE MEASURES TO PREVENT ANY UNPOLLUTED WATER SUCH AS GROUND AND SURFACE WATER FROM ENTERING THE EXISTING SANITARY SEWERS.

12. THE CONTRACTOR SHALL BE PROHIBITED FROM DISCHARGING ANY UNPOLLUTED WATER INTO THE SANITARY SEWER SYSTEM FOR THE PURPOSE OF SEWER FLUSHING OR FLOATING LINES FOR THE DEFLECTION TEST WITHOUT PRIOR APPROVAL FROM THE FOX RIVER WATER RECLAMATION DISTRICT.

13. ALL SEWERS, INCLUDING TRUNK LINE SEWERS AND LATERAL SEWERS, THAT WILL DISCHARGE SEWAGE FOR TREATMENT BY THE FOX RIVER WATER RECLAMATION DISTRICT, SHALL BE INSTALLED UNDER THE SUPERVISION OF A FULL TIME RESIDENT ENGINEER. NO WORK SHALL BE DONE IN THE ABSENCE OF THE RESIDENT ENGINEER.

14. THE DISTRICT SHALL HAVE THE RIGHT TO APPROVE THE SELECTION OF A RESIDENT ENGINEER. THE DISTRICT SHALL HAVE THE RIGHT TO REQUEST A SUBSTITUTE RESIDENT ENGINEER IN THE EVENT OF UNSATISFACTORY PERFORMANCE BY THE RESIDENT ENGINEER.

15. THE RESIDENT ENGINEER ON ANY SEWER CONSTRUCTION PROJECT SHALL PROVIDE THE DISTRICT WITH DAILY REPORTS NO LESS THAN EVERY TWO (2) WEEKS.

16. ALL NEW SANITARY SEWERS SHALL BE PRESSURE TESTED TO THE PROCEDURE OUTLINED IN THE "SPECIFICATIONS FOR LOW PRESSURE AIR TESTS OF THE SANITARY SEWERS" AVAILABLE AT THE FOX RIVER WATER RECLAMATION DISTRICT OFFICE. THE DISTRICT MAY REQUIRE SUCH OTHER TEST AS CONDITIONS MAY REQUIRE.

17. THE COST OF PROVIDING RESIDENT ENGINEERING AND PRESSURE TESTING SHALL BE BORNE BY THE OWNER OR DEVELOPER.

18. THE FOX RIVER WATER RECLAMATION DISTRICT MUST BE FURNISHED A COMPLETE SET OF CONSTRUCTION RECORD DRAWINGS OF THE SANITARY SEWERS CONSTRUCTED FOR A PROJECT WITHIN 60 DAYS OF COMPLETION OF THE SEWERS.

19. SANITARY SEWER MANHOLES WITH INTERNAL DROPS TWO FEET OR LESS SHALL HAVE A PRECAST CONCRETE TROUGH BUILT IN THE STRUCTURE TO OBTAIN A SMOOTH FLOW TRANSITION FROM THE UPSTREAM PIPE INVERT TO THE DOWNSTREAM PIPE INVERT.

20. ALL MANHOLES AND STRUCTURES SHALL BE CLEANED OF ANY ACCUMULATION OF SILT, DEBRIS, OR FOREIGN MATTER OF ANY KIND, AND SHALL BE FREE FROM SUCH ACCUMULATIONS AT THE TIME OF FINAL INSPECTION. ALL MANHOLES AND STRUCTURES SHALL BE INSPECTED BY THE FRWRD PRIOR TO ACCEPTANCE.

ORIGINAL SURVEY		BY	DATE
	SURVEYED		
	PLOTTED		
NOTE BOOK	DRAWN		
	AREAS		
NO.	AREAS CHECKED		

SANITARY SEWER, STORM SEWER, WATERMAIN

1. ALL SANITARY SEWER AND WATERMAIN WORK SHALL BE CONSTRUCTED IN ACCORDANCE WITH THE APPLICABLE STANDARD SPECIFICATIONS FOR WATER AND SEWER MAIN CONSTRUCTION IN ILLINOIS, LATEST EDITION.

2. SANITARY SEWERS AND WATERMAIN SERVICES SHALL HAVE A MINIMUM OF 6.0 FEET OF COVER AND SHALL BE RUN IN STRAIGHT ALIGNMENT UNLESS SPECIFICALLY SHOWN ON THE PLANS.

3. ALL EXISTING UTILITIES OR IMPROVEMENTS, INCLUDING WALKS, CURBS, PAVEMENT AND PARKWAYS DAMAGED OR REMOVED DURING CONSTRUCTION SHALL BE PROMPTLY RESTORED TO THEIR RESPECTIVE ORIGINAL CONDITION.

4. THE CONTRACTOR SHALL NOTIFY ALL UTILITY COMPANIES PRIOR TO CONSTRUCTION TO VERIFY IN THE FIELD ALL EXISTING UNDERGROUND UTILITIES WITHIN AND ADJACENT TO THE PROJECT AND BE RESPONSIBLE FOR PROTECTION OF SAME.

5. ALL STORM MANHOLE, CATCH BASIN, AND INLET FRAME ADJUSTMENTS SHALL BE MADE WITH PRECAST CONCRETE ADJUSTING RINGS SET IN A FULL BED OF BUTYL ROPE JOINT SEALANT. NO MORE THAN 8" OF ADJUSTING RINGS WILL BE PERMITTED.

6. ALL DRAINAGE STRUCTURES TO HAVE POURED INVERTS CONFORMING TO THE SHAPE OF THE PIPE.

7. THE CONTRACTOR SHALL BE AWARE OF POTENTIAL CONFLICTS WITH EXISTING UTILITIES AS INDICATED ON THE PLANS. THE CONTRACTOR SHALL EXCAVATE AROUND UTILITIES TO DETERMINE ELEVATIONS BEFORE BEGINNING CONSTRUCTION.

8. STAINLESS STEEL "NON-SHEAR" OR SIMILAR COUPLINGS SHALL BE USED WHEN JOINING SEWER PIPES OF DISSIMILAR MATERIALS.

9. ALL NEW SANITARY SEWERS SHALL HAVE WYES FOR PROPOSED BUILDING SERVICES. ALL CONNECTIONS TO EXISTING SANITARY SEWERS NOT HAVING WYES SHALL BE MADE WITH AN INSERT A TEE TYPE TYPE FITTING OR APPROVED EQUAL.

10. ALL EXISTING FIELD DRAINAGE TILE ENCOUNTERED OR DAMAGED DURING CONSTRUCTION ARE TO BE RESTORED TO THEIR ORIGINAL CONDITION, PROPERLY REROUTED AND/OR CONNECTED TO THE STORM SEWER SYSTEM. ALL LOCATIONS OF ENCOUNTERED FIELD DRAINAGE TILE SHALL BE PROPERLY REFERENCED AND DOCUMENTED FOR INCORPORATION INTO THE RECORD DRAWING.

11. ALL TRENCHES UNDER CURB OR PAVEMENT WITHIN 2 FEET OF AN EXISTING OR PROPOSED CURB OR PAVEMENT, ARE TO BE BACKFILLED WITH TRENCH BACKFILL.

12. AT THE COMPLETION OF THIS PROJECT, ONE SET OF PLANS WITH RECORD MEASUREMENTS IS TO BE SUBMITTED TO THE ENGINEER SHOWING THE LOCATION OF ALL OF THE SERVICES, PIPES, STRUCTURES, GRADING AND UTILITIES.

13. ANY EXISTING UTILITY STRUCTURES REQUIRING ADJUSTMENT ARE TO BE ADJUSTED (UP TO 8" TOTAL ADJUSTMENT) OR RECONSTRUCTED BY THE CONTRACTOR. ADJUSTMENTS OR RECONSTRUCTIONS NOT CALLED FOR ON THE PLANS SHALL BE CONSIDERED INCIDENTAL TO THE CONTRACT.

14. CONNECTIONS TO EXISTING SANITARY, STORM AND WATER SYSTEMS SHALL BE CONSIDERED INCIDENTAL TO THE CONTRACT, UNLESS SPECIFICALLY NOTED OTHERWISE.

15. ALL WATERMAINS SHALL BE CEMENT LINED DUCTILE IRON PIPE, CLASS 52 CONFORMING TO AWWA C-151 WITH PUSH-ON OR MECHANICAL JOINTS AND SHALL HAVE A MINIMUM OF 6.0 FEET OF COVER AND SHALL BE ENCASED IN POLYETHYLENE FILM IN ACCORDANCE WITH AWWA C-105-82. FITTINGS SHALL BE CEMENT LINED, TAR COATED CAST IRON WITH MECHANICAL JOINTS RATED 250 PSI PER AWWA C110/ANSI 21.20 (CLOW, AMERICAN, U.S. PIPE, OR EQUAL).

    ALL MAIN LINE VALVES SHALL BE RESILIENT SEAT EPOXY COATED WEDGE GATE VALVE TYPE (MUELLER, KENNEDY, CLOW, OR APPROVED EQUAL), GATE VALVES SHALL BE INSTALLED IN EACH FIRE HYDRANT LEAD WITH "O" RING STUFFING BOX. (MUELLER, KENNEDY, OR EQUAL). CA-6 CRUSHED COMPACTED LIMESTONE SHALL BE UTILIZED TO BACKFILL AROUND ALL VALVES AND VALVE BOXES.

16. WATER SERVICES SHALL INCLUDE THE NECESSARY LENGTH OF TYPE "K" COPPER WATER TUBE OF THE SIZE SHOWN ON THE PLANS, CORPORATION STOP, CURB STOP, AND SERVICE BOX, ALL AS REQUIRED BY THE MUNICIPALITY, AND ALL NECESSARY LABOR, TOOLS, EQUIPMENT, EXCAVATION AND BACKFILL, FOR A COMPLETE INSTALLATION AS SHOWN ON THE PLANS, TRENCH BACKFILL WILL BE PAID FOR SEPARATELY, WHEN REQUIRED. NO SIDE YARD WATER SERVICES WILL BE ALLOWED.

17. SANITARY SEWER STRUCTURES SHALL BE ASSEMBLED AND ADJUSTED USING BUTYL ROPE JOINT SEALANT SHOWN ON THE PLANS AND MEETING THE APPROVAL OF THE MUNICIPALITY.

18. ALL FIRE HYDRANTS SHALL BE WATEROUS PACER MODEL WB-67, WITH DOUBLE 2 1/2" AND ONE 4 1/2" STEAMER CONNECTIONS WITH NATIONAL STANDARD THREADS. AUXILIARY VALVE TO BE RESILIENT SEAT EPOXY COATED RESILIENT SEAT WEDGE GATE VALVE, WITH VALVE LID EMBOSSED "WATER".

19. ALL WATERMAINS SHALL BE HIGH PRESSURE AND SYSTEM PRESSURE TESTED AND DISINFECTED IN ACCORDANCE WITH STANDARDS AND PROCEDURES MEETING THE APPROVAL OF THE MUNICIPALITY AS FOLLOWS:

    TESTING AND INSPECTING WATERMAIN

    A. HYDROSTATIC TESTS:

    1. WHERE ANY SECTION OF A WATER LINE IS PROVIDED WITH CONCRETE THRUST BLOCKING FOR FITTINGS, DO NOT MAKE HYDROSTATIC TESTS UNTIL AT LEAST 5 DAYS AFTER INSTALLATION OF THE CONCRETE THRUST BLOCKING, UNLESS OTHERWISE DIRECTED BY THE ENGINEER.

    2. DEVISE A METHOD FOR DISPOSAL OF WASTE WATER FROM HYDROSTATIC TESTS, AND FOR DISINFECTING, AS APPROVED IN ADVANCE BY THE ENGINEER.

SANITARY SEWER, STORM SEWER, WATERMAIN (CONTD.)

    B. PRESSURE TESTS:

    1. SUBJECT THE NEW WATERMAINS AND SERVICE LINES, INCLUDING VALVES AND HYDRANTS, TO A HYDROSTATIC PRESSURE OF 150 PSI.

    2. HOLD THE TEST PRESSURE FOR A DURATION OF TWO HOURS WITHOUT PRESSURE LOSS OR FURTHER PRESSURE APPLICATION.

    3. CAREFULLY EXAMINE EXPOSED PIPE, JOINTS, FITTINGS, AND VALVES.

    4. REPLACE OR REMAKE JOINTS SHOWING VISIBLE LEAKAGE.

    5. REMOVE CRACKED PIPE, DEFECTIVE PIPE, AND CRACKED OR DEFECTIVE JOINTS, FITTINGS, AND VALVES. REPLACE WITH SOUND MATERIAL AND REPEAT THE TEST UNTIL RESULTS ARE SATISFACTORY.

    6. MAKE REPAIR AND REPLACEMENT WITHOUT ADDITIONAL COST TO OWNER.

    C. LEAKAGE TEST:

    1. CONDUCT A METERED LEAKAGE TEST AFTER THE PRESSURE TEST HAS BEEN SATISFACTORILY COMPLETED.

    2. DURATION OF EACH LEAKAGE TEST: AT LEAST 24 HOURS.

    3. DURING THE TEST, SUBJECT WATER LINES TO A NORMAL WATER PRESSURE OF THE OWNER'S WATER SYSTEM.

    4. MAXIMUM ALLOWABLE LEAKAGE: ONE GALLON PER INCH OF PIPE DIAMETER PER 1,000 FEET OF PIPE PER 24 HOURS AS RECORDED BY A METER APPROVED BY THE ENGINEER.

    5. SHOULD ANY TEST OF PIPE DISCLOSE LEAKAGE GRATER THAN THE MAXIMUM ALLOWABLE AMOUNT, LOCATE AND REPAIR THE DEFECTIVE JOINT OR JOINTS AND THEN REPEAT THE 24-HOUR METERED LEAKAGE TEST UNTIL THE LEAKAGE IS WITHIN THE SPECIFIED ALLOWANCE AND AT NO ADDITIONAL COST TO THE OWNER.

    D. TIME FOR MAKING TEST:

    1. EXCEPT FOR JOINT MATERIAL SETTING, OR WHERE CONCRETE REACTION BACKING NECESSITATES A 5 DAY DELAY, PIPELINES JOINTED WITH RUBBER GASKETS, MECHANICAL, OR PUSH-ON JOINTS, OR COUPLINGS MAY BE SUBJECTED TO HYDROSTATIC PRESSURE, INSPECTED, AND TESTED FOR LEAKAGE AT ANY TIME AFTER PARTIAL COMPLETION OF BACKFILL.

    2. PERFORM THE PRESSURE AND LEAKAGE TESTS SATISFACTORILY PRIOR TO REQUESTING THE ENGINEER TO WITNESS THE OFFICIAL TESTS.

    3. NOTIFY THE ENGINEER AT LEAST 48 HOURS PRIOR TO THE TIME OF THE REQUESTED OFFICIAL TESTS.

    4. DEPENDING ON TRAFFIC CONDITIONS, PUBLIC HAZARD, OR OTHER REASONS, THE ENGINEER MAY DIRECT WHEN TO CONDUCT THE TESTS, AND MAY ORDER THE TESTS TO BE MADE IN RELATIVELY SHORT SECTIONS OF WATERMAINS.

20. GRANULAR TRENCH BACKFILL SHALL BE USED IN ALL LOCATIONS WHERE THE PROPOSED UNDERGROUND UTILITY IS TO BE CONSTRUCTED UNDER PERMANENT TYPE PAVEMENTS OR IN ANY UTILITY TRENCH OVER WHICH ANOTHER UTILITY WILL PASS, OR AS DIRECTED BY THE ENGINEER. TRENCH BACKFILL SHALL BE EXTENDED TWO (2) FEET ON EACH SIDE OF THE PERMANENT TYPE SURFACE, AS MEASURED AT THE LOWEST POINT OF THE PAVEMENT, DRIVEWAY OR SIDEWALK.

21. WHERE SHOWN ON THE PLANS OR DIRECTED BY THE ENGINEER, EXISTING DRAINAGE STRUCTURES AND SYSTEMS SHALL BE CLEANED OF DEBRIS AND PATCHED AS NECESSARY TO ASSURE INTEGRITY OF THE STRUCTURE. THIS WORK WILL BE PAID FOR AT THE CONTRACT UNIT PRICE EACH FOR STRUCTURES AND CONTRACT UNIT PRICE PER LINEAL FOOT FOR SYSTEMS WHICH SHALL BE PAYMENT IN FULL FOR CLEANING, PATCHING, REMOVAL AND DISPOSAL OF DEBRIS AND DIRT. DRAINAGE STRUCTURES AND SYSTEMS CONSTRUCTED AS PART OF THIS PROJECT SHALL BE MAINTAINED BY THE CONTRACTOR AT HIS EXPENSE. NO PAYMENT WILL BE MADE FOR CLEANING STRUCTURES OR SYSTEMS CONSTRUCTED AS PART OF THIS PROJECT.

22. WHERE DUCTILE IRON PIPE IS INDICATED ON THE PLANS FOR WATERMAIN AND/OR SANITARY SEWER, IT SHALL BE ENCASED IN POLYETHYLENE FILM IN ACCORDANCE WITH AWWA C-105-82 (EXCEPT FOR PIPE EXPOSED TO THE ATMOSPHERE AT THE BRIDGE CROSSING).

23. TRENCH BACKFILL WILL BE PAID FOR IN ACCORDANCE WITH THE 2007 EDITION OF THE ILLINOIS DEPARTMENT OF TRANSPORTATION, "STANDARD SPECIFICATIONS FOR ROAD AND BRIDGE CONSTRUCTION".

24. ALL PUBLIC SANITARY SEWERS WILL BE AIR TESTED BY THE CONTRACTOR, AT HIS EXPENSE, UNDER THE SUPERVISION OF THE VILLAGE ENGINEER, OR HIS AUTHORIZED REPRESENTATIVE. ONE COPY OF THE REPORT SHALL BE FORWARDED TO THE OTTER CREEK WATER RECLAMATION DISTRICT, ONE COPY TO THE FOX RIVER WATER RECLAMATION DISTRICT, AND ONE COPY TO THE VILLAGE ENGINEER. AN INFILTRATION TEST WILL BE ALLOWED IF IT CAN BE SHOWN AT THE TIME OF THE TEST THAT THE WATER TABLE IS ABOVE THE TOP OF THE PIPE. ALL TESTING WILL BE DONE IN CONFORMANCE WITH THE "STANDARD SPECIFICATIONS FOR WATER AND SEWER MAIN CONSTRUCTION IN ILLINOIS" CURRENT EDITION.

25. CONNECTION TO EXISTING STORM SEWER STRUCTURES SHALL BE DONE BY CORING THE CONCRETE BARREL SECTION.

26. ALL EXISTING WELLS TO BE CAPPED AND ABANDONED IN ACCORDANCE WITH VILLAGE AND COUNTY HEALTH STANDARDS.

27. SANITARY MANHOLES ARE 4' DIAMETER UNLESS OTHERWISE NOTED.

SANITARY SEWER, STORM SEWER, WATERMAIN (CONTD.)

PROTECTION OF WATERMAIN AND WATER SERVICE LINES

WATERMAINS AND WATER SERVICE LINES SHALL BE PROTECTED FROM SANITARY SEWERS, STORM SEWERS, COMBINED SEWERS, HOUSE SEWER SERVICE CONNECTIONS AND DRAINS AS FOLLOWS:

A) WATERMAINS:

1.) HORIZONTAL SEPARATION:

a) WATERMAINS SHALL BE LAID AT LEAST TEN FEET HORIZONTALLY FROM ANY EXISTING OR PROPOSED DRAIN, STORM SEWER, SANITARY SEWER, COMBINED SEWER OR SEWER SERVICE CONNECTION.

b) WATERMAINS MAY BE LAID CLOSER THAN TEN FEET TO A SEWER LINE WHEN:

I) LOCAL CONDITIONS PREVENT A LATERAL SEPARATION OF TEN FEET;

II) THE WATERMAIN INVERT IS AT LEAST 18 INCHES ABOVE THE CROWN OF THE SEWER; AND

III) THE WATERMAIN IS EITHER IN A SEPARATE TRENCH OR IN THE SAME TRENCH ON AN UNDISTURBED EARTH SHELF LOCATED TO ONE SIDE OF THE SEWER.

c) BOTH THE WATERMAIN AND DRAIN OR SEWER SHALL BE CONSTRUCTED OF SLIP-ON OR MECHANICAL JOINT DUCTILE IRON PIPE, PRESTRESSED CONCRETE PIPE OR PVC PIPE MEETING THE REQUIREMENTS OF SECTION 653.111 WHEN IT IS IMPOSSIBLE TO MEET (A) OR (B) ABOVE. THE DRAIN OR SEWER SHALL BE PRESSURE TESTED TO THE MAXIMUM EXPECTED SURCHARGE HEAD BEFORE BACKFILLING.

2.) VERTICAL SEPARATION:

a) A WATERMAIN SHALL BE LAID SO THAT ITS INVERT IS 18 INCHES ABOVE THE CROWN OF THE DRAIN OR SEWER WHENEVER WATERMAINS CROSS STORM SEWERS, SANITARY SEWERS OR SEWER SERVICE CONNECTIONS. THE VERTICAL SEPARATION SHALL BE MAINTAINED FOR THAT PORTION OF THE WATERMAIN LOCATED WITHIN TEN FEET HORIZONTALLY OF ANY SEWER OR DRAIN CROSSED. A LENGTH OF WATERMAIN PIPE SHALL BE CENTERED OVER THE SEWER TO BE CROSSED WITH JOINTS EQUIDISTANT FROM THE SEWER OR DRAIN.

b) THE DRAIN OR SEWER SHALL BE CONSTRUCTED OF SLIP-ON OR MECHANICAL JOINT CAST OR DUCTILE IRON PIPE, PRESTRESSED CONCRETE PIPE, (STORM SEWER ONLY), OR PVC PIPE MEETING THE REQUIREMENTS OF SECTION 653.111, OR THE DRAIN OR SEWER SHALL BE SLEEVED WITH STEEL PIPE OR CONSTRUCTED OF REINFORCED CONCRETE PIPE CONFORMING TO ASTM C-76 WITH GASKETED JOINTS CONFORMING TO ASTM C-361 (STORM SEWERS ONLY), FOR A DISTANCE OF 10 FEET EITHER SIDE OF THE CONFLICT,

I) IT IS IMPOSSIBLE TO OBTAIN THE PROPER VERTICAL SEPARATION AS DESCRIBED IN (A) ABOVE; OR

II) THE WATERMAIN PASSES UNDER A SEWER OR DRAIN.

c) A VERTICAL SEPARATION OF 18 INCHES BETWEEN THE INVERT OF THE SEWER OR DRAIN AND THE CROWN OF THE WATERMAIN SHALL BE MAINTAINED WHERE A WATERMAIN CROSSES UNDER A SEWER. SUPPORT THE SEWER OR DRAIN LINES TO PREVENT SETTLING AND BREAKING THE WATERMAIN.

d) CONSTRUCTION SHALL EXTEND ON EACH SIDE OF THE CROSSING UNTIL THE NORMAL DISTANCE FROM THE WATERMAIN TO THE SEWER OR DRAIN LINE IS AT LEAST TEN FEET.

B) WATER SERVICE LINES:

1) THE HORIZONTAL AND VERTICAL SEPARATION BETWEEN WATER SERVICE LINES AND ALL STORM SEWERS, SANITARY SEWER" COMBINED SEWERS OR ANY DRAIN OR SEWER SERVICE CONNECTION SHALL BE THE SAME AS WATER MAIN SEPARATION DESCRIBED IN (A) ABOVE.

2) WATER PIPE DESCRIBED IN (A) ABOVE SHALL BE USED FOR SEWER SERVICE LINES WHEN MINIMUM HORIZONTAL AND VERTICAL SEPARATION CANNOT BE MAINTAINED.

C) SPECIAL CONDITIONS - ALTERNATE SOLUTIONS SHALL BE PRESENTED TO THE AGENCY WHEN EXTREME TOPOGRAPHICAL, GEOLOGICAL OR EXISTING STRUCTURAL CONDITIONS MAKE STRICT COMPLIANCE WITH (A) AND (B) ABOVE TECHNICALLY AND ECONOMICALLY IMPRACTICAL. ALTERNATE SOLUTIONS WILL BE APPROVED PROVIDED WATERTIGHT CONSTRUCTION STRUCTURALLY EQUIVALENT TO APPROVED WATERMAIN MATERIAL IS PROPOSED.

D) WATERMAINS SHALL BE SEPARATED FROM SEPTIC TANKS, DISPOSAL FIELDS AND SEEPAGE BEDS BY A MINIMUM OF 25 FEET.

E) WATERMAINS AND WATER SERVICE LINES SHALL BE PROTECTED AGAINST ENTRANCE OF HYDROCARBONS THROUGH DIFFUSION THROUGH ANY MATERIAL USED IN CONSTRUCTION OF THE LINE.

PIPE ATTACHED TO THE BRIDGE

"STANDARD SPECIFICATIONS FOR WATER AND SEWER MAIN CONSTRUCTION AN ILLINOIS", LATEST EDITION: WHENEVER THE CONTRACTOR'S OPERATIONS ENCOUNTER WATER LINE AND/OR FORCE MAIN INSTALLATION, RELOCATION OR ADJUSTMENTS, OR SERVICE CONNECTIONS, HIS WORK, IN ADDITION TO ALL OTHER REQUIREMENTS, SHALL ALSO BE GOVERNED BY THE APPLICABLE PORTIONS OF THE ABOVE SPECIFICATIONS.

SANITARY SEWER, STORM SEWER, WATERMAIN (CONTD.)

ALL WATER MAIN PIPE SHALL BE DUCTILE IRON, CLASS 56, CONFORMING TO THE REQUIREMENTS OF DIVISION IV, SECTION 40-2.02 OF THE "STANDARD SPECIFICATIONS", CENTRIFUGAL CAST WITH STANDARD THICKNESS CEMENT MORTAR LINING AND SEAL COATING (AWWA STD. C-104). PIPE SHALL HAVE AN EXTERIOR BITUMINOUS SEAL COAT MEETING THE REQUIREMENTS OF AWWA STANDARD C- 104. MECHANICAL JOINTS WILL COMPLY WITH THE PROVISIONS OF DIVISION IV, SECTION 41-2.05B OF THE "STANDARD SPECIFICATIONS FOR WSMCI".

ALL FORCE MAIN PIPE SHALL BE DUCTILE IRON, CLASS 56, CONFORMING TO THE REQUIREMENTS OF DIVISION III, SECTION 30-3.01E OF THE "STANDARD SPECIFICATIONS", CENTRIFUGAL CAST WITH STANDARD THICKNESS CEMENT MORTAR LINING AND SEAL COATING (AWWA STD. C-104). PIPE SHALL HAVE AN EXTERIOR BITUMINOUS SEAL COAT MEETING THE REQUIREMENTS OF AWWA STANDARD C-104. MECHANICAL JOINTS WILL COMPLY WITH THE PROVISIONS OF DIVISION III, SECTION 30-3-03 OF THE "STANDARD SPECIFICATIONS FOR WSMCI".

FITTINGS FOR DUCTILE IRON WATER MAIN AND FORCE MAIN SHALL BE DUCTILE IRON CONFORMING TO THE REQUIREMENTS OF AWWA STANDARD C-110, HAVE MECHANICAL RESTRAINED JOINTS CONFORMING TO AWWA STANDARD C-111, AND BE BITUMINOUS COATED AND CEMENT LINED IN ACCORDANCE WITH AWWA STANDARD C-104. PROVIDE AND INSTALL TYPE 304 STAINLESS STEEL TEE BOLTS, NUTS AND WASHERS ON ALL FITTINGS. THE THREADS OF ALL STAINLESS STEEL FASTENERS SHALL BE COATED WITH MARINE GRADE ANTI-SEIZE/LUBRICATING COMPOUND, EITHER SHOP APPLIED OR FIELD APPLIED.

TO INSURE ELECTRIC CONDUCTIVITY, BRASS WEDGES SHALL BE ISNTALLED PER SECTION 41-2.05C OF THE "STANDARD SPECIFICATIONS FOR WSMCI".

IN ADDITION TO THE REQUIREMENTS OF THE "STANDARD SPECIFICATIONS FOR WSMCI" FLANGED WATER AND FORCE MAIN PIPE FOR THE UNDERGROUND CROSSING SHALL MEET THE REQUIREMENT OF THE AWWA STANDARD C-115 AND SHALL BE RATED FOR 250 PSI WORKING PRESSURE. BOLTS AND GASKETS FOR FLANGED PIPE SHALL MEET THE REQUIREMENTS OF AWWA STANDARD C-110.

EXPANSION JOINT FOR BRIDGE CROSSING SHALL BE ROCKWELL MODEL 611, OR OPPROVED EQUAL, WITH SINGLE END FLANGED JOINT COMPATIBLE WITH THE DUCTILE IRON WATER PIPE. EXPANSION JOINT TO BE PROVIDED WITH SLIP PIPE; BUT, WITHOUT LIMIT RODS. EXPANSION JOINT TO BE INSTALLED IN COMPLIANCE WITH MANUFACTURER'S INSTRUCTION. INSULATION TO BE PLACED TO COVER THE EXPANSION JOINT, BUT TO ALLOW THE SLIP PIPE TO MOVE FREELY.

INSULATION FOR THE FLANGED DUCTILE IRON WATER AND FORCE MAIN SHALL BE 3 INCH THICK POLYURETHANE FOAM INSULATION WITH A K FACTOR 0.13, DENSITY OF 3 POUNDS PER CUBIC FOOT MINIMUM CLOSED CELL CONTENT 90 - 95% IN CONFORMANCE WITH MIL-I-24172 COMPLETELY FILLING THE ANNULAR SPACE BETWEEN THE PIPE AND THE JACKETING. INSULATION SHALL BE FOAMED IN PLACE BY THE PRENSULATED PIPE COMPANY, SPRAY TYPE FOAM WILL NOT BE PERMITTED. THE INSULATED CLASS 56 WATER MAIN SHALL BE SUSPENDED USING PIPE HANGERS AS DETAILED ON THE PLANS.

THE OUTER JACKET SHALL BE ALUMINUM SPIRAL SEM WITH IMPACT AND CHEMICAL RESISTANCE EQUIVALENT TO H-14 TEMPER T-3003 IN ACCORDANCE WITH ASTM B313 SPECIFICATIONS. JACKET THICKNESS SHALL BE 18 GAGE. NO FRP OR PLASTIC OUTER JACKETS WILL BE CONSIDERED.

THE CONTRACTOR SHALL BE RESPONSIBLE FOR THE INSTALLATION AND PRESSURE TESTING OF THE DUCTILE IRON, FLANGED JOINT, INSULATED WATER AND FORCE MAIN BETWEEN AND INCLUDING THE PROPOSED VALVES AND VAULTS, CATCH BASINS OR MANHOLES AT EACH END OF THE BRIDGE AS SHOWN ON THE PLANS.

PUSH-ON, RESTRAINED JOINT PIPE SHALL MEET THE REQUIREMENTS OF AWWA STANDARD C-151. THE JOINT SHALL COMPLY WITH ALL THE PUSH-ON JOINT REQUIREMENTS OF AWWA STANDARD C-111.

MECHANICAL JOINTS SHALL BE OF STANDARD MANUFACTURE WITH RUBBER GASKET. SERRATED BRASS CONDUCTIVITY WEDGES WILL BE REQUIRED AT EACH JOINT. NO BACKFILLING WILL BE PERMITTED UNTIL JOINT INSTALLATION HAS BEEN APPROVED BY THE CITY.

PRIOR TO CONSTRUCTION CONTRACTOR SHALL PROVIDE ENGINEER WITH SHOP DRAWINGS OF HEAT TRACING SYSTEM FOR APPROVAL.

PIPE HANGERS

DESCRIPTION: THIS WORK INCLUDES THE FABRICATION, AND INSTALLATION OF HANGERS TO SUPPORT THE PROPOSED WATER AND FORCE MAINS UNDER THE EXISTING STRUCTURE. THIS WORK SHALL BE PERFORMED AS SPECIFIED HEREIN AND AS DETAILED ON THE PLANS.

CONSTRUCTION REQUIREMENTS: ALL PLATE MATERIAL FOR THE HANGER ASSEMBLIES SHALL MEET THE REQUIREMENTS OF ASTM A36. ALL THREADED RODS AND BOLTS FOR THE HANGERS SHALL MEET THE REQUIREMENTS OF ASTM A325. EXPANSION ANCHORS SHALL HAVE A MINIMUM ULTIMATE PULLOUT AND SHEAR CAPACITY OF 3500 POUNDS. ANCHORS SHALL BE INSTALLED IN ACCORDANCE WITH MANUFACTURERS RECOMMENDATIONS.

TESTING AND INSPECTING FOR THE SANITARY FORCEMAIN

A. HYDROSTATIC TEST:

1. WHERE ANY SECTION OF THE FORCE MAIN IS PROVIDED WITH CONCRETE THRUST BLOCKING, DO NOT MAKE HYDROSTATIC TESTS UNTIL AT LEAST 5 DAYS AFTER INSTALLATION OF THE CONCRETE THRUST BLOCKING, UNLESS OTHERWISE DIRECTED BY THE ENGINEER.

2. DEVISE A METHOD FOR DISPOSAL OF WASTE WATER FROM HYDROSTATIC TESTS AS APPROVED IN ADVANCE BY THE ENGINEER.

CIVILTECH
450 E Devon Ave, Suite 300
Itasca, Illinois 60143
Tel: 630.773.3900 Fax: 630.773.3975
www.civiltechinc.com

DESIGNED - PK	REVISED -	
DRAWN - PK	REVISED -	
CHECKED - RTM	REVISED -	
DATE - 3/25/2011	REVISED -	

STATE OF ILLINOIS
DEPARTMENT OF TRANSPORTATION

N.T.S.

DRAINAGE AND UTILITIES GENERAL NOTES AND DETAILS

SHEET NO. 1 OF 3 SHEETS

F.A.P. RTE.	SECTION	COUNTY	TOTAL SHEETS	SHEET NO.
361	06-00214-27-BR	KANE	87	28
		CONTRACT NO. 63595		
FED. ROAD DIST. NO. 1	ILLINOIS	FED. AID PROJECT		

SANITARY SEWER, STORM SEWER, WATERMAIN (CONTD.)

B. TESTING:

1. SUBJECT THE FORCE MAINS TO THE FOLLOWING HYDROSTATIC PRESSURE:

   A. NORMAL OPERATING PRESSURE OF 20 PSIG OR GREATER: 150 PSI

   B. NORMAL OPERATING PRESSURE OF LESS THAN 20 PSIG: 50 PSIG

   C. AIR AND GAS PIPING: PNEUMATIC PRESSURE OF 15 PSIG.

2. HOLD THE TEST PRESSURE FOR A DURATION OF TWO HOURS WITHOUT PRESSURE LOSS OR FURTHER PRESSURE APPLICATION.

3. REPLACE OR REMAKE JOINTS SHOWING VISIBLE LEAKAGE.

4. REMOVE CRACKED PIPE, DEFECTIVE PIPE, AND CRACKED OR DEFECTIVE JOINTS, FITTINGS, AND VALVES. REPLACE WITH SOUTH MATERIAL AND REPEAT THE TEST UNTIL RESULTS ARE SATISFACTORY.

5. MAKE REPAIR AND REPLACEMENT WITHOUT ADDITIONAL COST TO THE OWNER.

C. LEAKAGE TEST:

1. CONDUCT A METERED LEAKAGE TEST AFTER THE PRESSURE TEST HAS BEEN SATISFACTORY COMPLETED.

2. DURATION OF EACH LEAKAGE TEST: AT LEAST 24 HOURS.

3. DURING THE TEST, SUBJECT FORCE MAIN TO A WATER PRESSURE OF 150 PSI.

4. MAXIMUM ALLOWABLE LEAKAGE: ONE GALLON PER INCH OF PIPE DIAMETER PER 1,000 FEET OF PIPE PER 24 HOURS AS RECORDED BY A METER APPROVED BY THE ENGINEER.

5. SHOULD ANY TEST OF PIPE DISCLOSE LEAKAGE GREATER THAN THE MAXIMUM ALLOWABLE AMOUNT, LOCATE AND REPAIR THE DEFECTIVE JOINT OR JOINTS AND THEN REPEAT THE 24-HOUR METERED LEAKAGE TEST UNTIL THE LEAKAGE IS WITHIN THE SPECIFIC ALLOWANCE AND AT NO ADDITIONAL COST TO THE OWNER.

MATERIALS

PVC (POLYVINYL CHLORIDE) PLASTIC PIPE. ALL PIPE AND FITTINGS SHALL CONFORM TO TYPE PSM IN ACCORDANCE WITH ASTM D-3034 OR ASTM D-2241 FOR SIZES SIX (6) THROUGH FIFTEEN (15) INCHES. THE STANDARD DIMENSION RATIO (SDR) FOR THE PIPE SHALL BE 26 AS A MINIMUM AND SHALL BE DEPENDENT UPON THE DEPTH OF COVER. FOR PIPE DIAMETERS EIGHTEEN (18) TO TWENTYSEVEN (27) INCHES, PIPE AND FITTINGS SHALL CONFORM TO ASTM D2241 OR AWWA C905. ALL PVC PLASTIC PIPE SHALL HAVE A CELL CLASSIFICATION OF 12454-B.

FITTINGS

PIPE FITTINGS SHALL CONFORM TO ASTM D-3034 OR ASTM D-2241 AND SHALL MEET THE REQUIREMENTS OF ASTM STANDARD D-3212 OR D-3139, WHICHEVER IS APPLICABLE. SOLVENT JOINTS ARE NOT PERMITTED.

PVC SEWER FITTINGS CONFORMING TO ASTM D-3034 SHALL HAVE A MINIMUM WALL THICKNESS OF SDR 35. FITTINGS IN SIZES THROUGH 10" SHALL BE MOLDED IN ONE PIECE WITH ELASTOMERIC JOINTS AND MINIMUM SOCKET DEPTHS. FITTINGS 12" AND LARGER SHALL BE MOLDED OR FABRICATED WITH MANUFACTURES STANDARD PIPE BELLS AND GASKETS. GASKETS SHALL HAVE A MINIMUM CROSS SECTIONAL AREA OF 0.20 SQ. IN. AND CONFORM TO ASTM F-477 SPECIFICATION.

INTERNAL DIAMETER

PIPE SHALL BE CONSTRUCTED SO THAT THE INTERNAL DIAMETER DOES NOT DECREASE BY MORE THAN 5 PERCENT, IN ORDER TO PROVIDE THE COMPLETE HYDRAULIC CARRYING CAPACITY, AND TO OBTAIN THE JOINT PERFORMANCE AT 5 PERCENT MAXIMUM DIAMETRIC DEFLECTION. IF THE DISTRICT FINDS ANY LENGTHS OF PIPELINE DEFLECTED GREATER THAN 5 PERCENT, THE CONTRACTOR SHALL BE REQUIRED TO REMOVE AND REPLACE THOSE SECTIONS OF PIPE AT HIS SOLE EXPENSE.

PIPE INSTALLATION AND FIELD TESTING

PIPE SHALL BE CONSTRUCTED IN FULL COMPLIANCE WITH THE ASTM STANDARD SPECIFICATION D-2321 "UNDERGROUND INSTALLATION OF FLEXIBLE THERMOPLASTIC SEWER PIPE".

INITIAL BACKFILLING AND BEDDING MATERIALS SHALL BE CLASS I, AS OUTLINED IN ASTM D-2321 AND SHALL HAVE AN IDOT GRADATION OF CA-7.

THE PIPE SHALL BE LAID SO THAT IT WILL BE UNIFORMLY SUPPORTED FOR ITS ENTIRE LENGTH.

NO BLOCKING OF ANY KIND SHALL BE USED TO ADJUST THE PIPE TO GRADE EXCEPT WHEN EMBEDMENT CONCRETE IS USED. BEDDING SHALL BE A MINIMUM OF FOUR INCHES IN DEPTH. THE BEDDING MATERIAL SHALL BE PLACED AND COMPACTED AROUND AND OVER THE CROWN OF THE PIPE BY A MINIMUM THICKNESS OF TWELVE (12) INCHES. THE CONTRACTOR SHALL BE REQUIRED TO INSTALL THE PIPE IN SUCH A MANNER THAT THE DIAMETRIC DEFLECTION OF THE PIPE SHALL NOT EXCEED 5 PERCENT AND THE MATERIALS SURROUNDING THE PIPE SHALL BE COMPACTED TO THE REQUIRED STANDARD PROCTOR DENSITIES OUTLINED IN D-2321.

SANITARY SEWER, STORM SEWER, WATERMAIN (CONTD.)

FINAL ACCEPTANCE

BEFORE FINAL ACCEPTANCE, THE SANITARY SEWERS SHALL BE TESTED IN ACCORDANCE WITH SECTION 31-1.11 OF THE STANDARD SPECIFICATIONS FOR WATER AND SEWER MAIN CONSTRUCTION IN ILLINOIS. SPECIFICALLY, ALL PIPELINES CONSTRUCTED OF FLEXIBLE MATERIALS SHALL BE SUBJECTED TO AN AIR EXFILTRATION TEST, TELEVISING TEST AND DEFLECTION TEST. THE DEFLECTION TEST SHALL BE PERFORMED NO SOONER THAN THIRTY (30) DAYS OF COMPLETION OF THE BACKFILLING OPERATION AND SHALL CONSIST OF MEASURING THE PIPE FOR VERTICAL RING DEFLECTION. MAXIMUM RING DEFLECTION OF THE PIPELINE UNDER LOAD SHALL BE LIMITED TO 5 PERCENT OF THE VERTICAL INTERNAL PIPE DIAMETER. ALL PIPE EXCEEDING THIS DEFLECTION SHALL BE CONSIDERED TO HAVE REACHED THE LIMIT OF ITS SERVICEABILITY AND SHALL BE RELAID OR REPLACED BY THE CONTRACTOR AT HIS SOLE EXPENSE.

THE COST OF ALL DEFLECTION TESTING SHALL BE BORNE BY THE CONTRACTOR AND SHALL BE ACCOMPLISHED BY PULLING A MANDREL, SPHERE, OR PIN-TYPE "GO/NO-GO" DEVICE THROUGH THE PIPELINE. THE DIAMETER OF THE MANDREL, SPHERE, OR "GO/NO-GO" DEVICE SHALL BE 95 PERCENT OF THE UNDEFLECTED INSIDE DIAMETER OF THE FLEXIBLE PIPE.

FOX RIVER WATER RECLAMATION DISTRICT MINIMUM REQUIREMENTS FOR MANHOLE STRUCTURES

1. SANITARY MANHOLE LID MUST HAVE CONCEALED PICK HOLES AND HAVE THE WORD "SANITARY" STAMPED IN THE COVER WITH AN INTACT RUBBER GASKET SEAL.
2. THE FRAME LIP SHALL BE CLEANED OF ALL MUD AND DEBRIS TO PROVIDE A WATERTIGHT SEAL BETWEEN THE FRAME AND THE MANHOLE COVER GASKET.
3. THERE MUST BE EZ-STIK BETWEEN THE FRAME AND ADJUSTING RINGS AND BETWEEN THE ADJUSTING RINGS AND THE CONE SECTION.
4. THE AREAS BETWEEN THE ADJUSTING RINGS AND THE MANHOLE FRAMES MUST NOT BE TUCKPOINTED WITH MORTAR.
5. ALL STEPS MUST BE INSTALLED, ALIGNED AND CLEAN.
6. THE BARREL SECTION JOINTS MUST BE TUCKPOINTED WITH HYDRAULIC CEMENT OR MORTAR WITH A BRUSH FINISH.
7. ALL PINHOLES MUST BE MORTARED WITH A BRUSH FINISH TO PROVIDE A WATERTIGHT SEAL.
8. THE UPSTREAM AND DOWNSTREAM PIPE CAVITIES MUST BE FILLED WITH MORTAR AND SMOOTHED WITH A BRUSH FINISH.
9. THE UPSTREAM AND DOWNSTREAM FLOW LINES (INVERTS) SHALL HAVE A SMOOTH TRANSITION FROM THE PIPE TO THE MANHOLE INVERT.
10. ALL MANHOLE STRUCTURES SHALL BE FREE OF ANY TYPE OF INFILTRATION (WATER LEAKING INTO THE STRUCTURE).
11. IF THERE IS AN INTERNAL DROP IN THE STRUCTURE THERE MUST BE A SMOOTH TRANSITION FROM THE PIPE TO THE INVERT (I.E. CHANNEL THE FLOW FROM THE PIPE TO THE MANHOLE INVERT).
12. ALL MANHOLES SHALL BE CLEANED OF ANY ACCUMULATION OF SILT, DEBRIS, OR FOREIGN MATTER OF ANY KIND, AND SHALL BE FREE FROM SUCH ACCUMULATIONS AT THE TIME OF FINAL INSPECTION.

COMBINATION AIR VALVE SPECIFICATIONS

SEWAGE COMBINATION AIR VALVE SHALL ALLOW LARGE VOLUMES OF AIR TO ESCAPE OR ENTER THROUGH THE LARGER DIAMETER ORIFICE WHEN FILLING OR DRAINING A PIPELINE.

THEN THE PIPELINE IS FILLED AND PRESSURIZED, THE LARGE AIR/VACUUM ORIFICE SHALL STAY CLOSED, BUT THE SMALLER DIAMETER AIR RELEASE ORIFICE SHALL REMAIN OPERATIVE AND OPEN TO ALLOW SMALL POCKETS OF AIR ACCUMULATION TO ESCAPE AUTOMATICALLY AND INDEPENDENTLY OF THE LARGE ORIFICE.

THE LARGE AIR/VACUUM ORIFICE SHALL SHUT OFF WHEN THE FREE FLOATING-CENTER GUIDED PLUG IS RAISED INTO THE ORIFICE BY THE LIFTING FORCE OF THE BOTTOM FLOAT. THE LARGE ORIFICE SHUT-OFF SHALL BE WITHOUT SPILLING.

THE BUNA-N SEAT MUST BE FASTENED TO THE VALVE COVER, WITHOUT DISTORTION, FOR DRIP-TIGHT SHUT-OFF.

THE VALVE INLET SHALL HAVE A 2-INCH DIAMETER INLET AND A 1-INCH DIAMETER OUTLET.

THE VALVE MANUFACTURER SHALL FURNISH PROFESSIONALLY PRINTED INSTALLATION AND MAINTENANCE INSTRUCTION MANUALS WITH EACH VALVE.

MATERIALS OF CONSTRUCTION SHALL BE CERTIFIED TO CONFORM TO FOLLOWING A.S.T.M. SPECIFICATIONS:

BODY & COVER	CAST IRON	ASTM A126 GR.B
FLOAT	STAINLESS STEEL	ASTM A240 T304
STEM	STAINLESS STEEL	SERIES T300
NEEDLE AND SEAT	BUNA-N	NITRILE RUBBER
PLUG	BRASS	ASTM B124
LEVERAGE FRAME	DELRIN	ASTM D4181
EXTERIOR PAINTING	UNIVERSAL METAL PRIMER	FDA APPROVED FOR POTABLE WATER

THE VALVE SHALL BE MODEL VM-801ABW AS MANUFACTURED BY VAL-MATIC.

THE PROJECT IS TO BE CONSTRUCTED UNDER THE FOLLOWING PERMITS:

IEPA WATER POLLUTION CONTROL PERMIT NO._____DATED_____

IEPA PUBLIC WATER SUPPLIES CONTROL PERMIT NO._____DATED_____

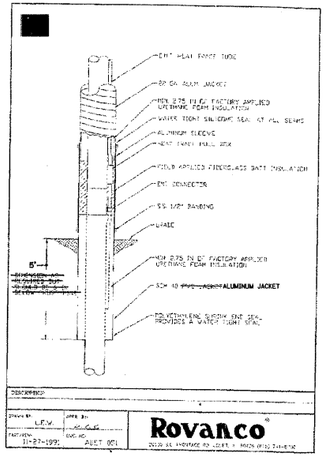

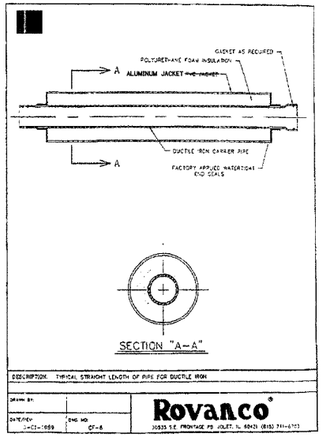

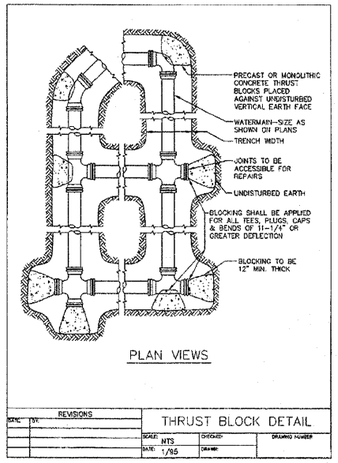

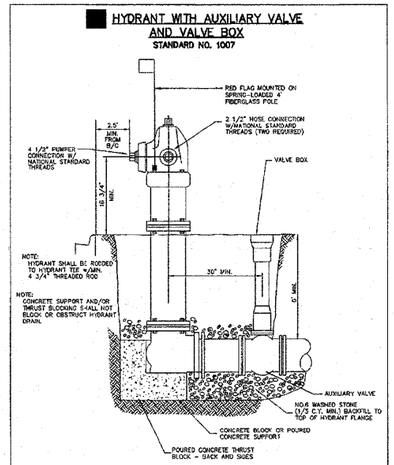

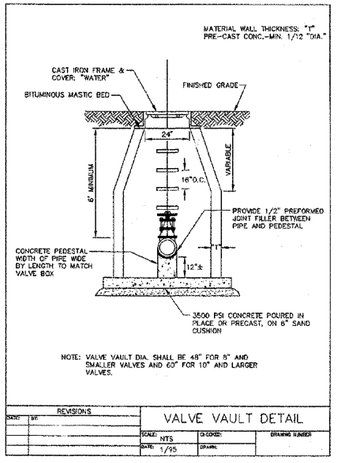

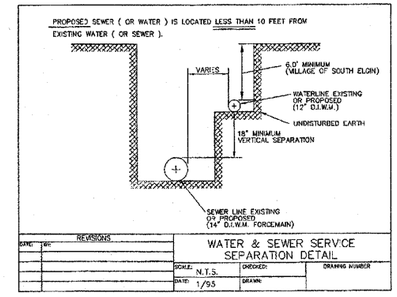

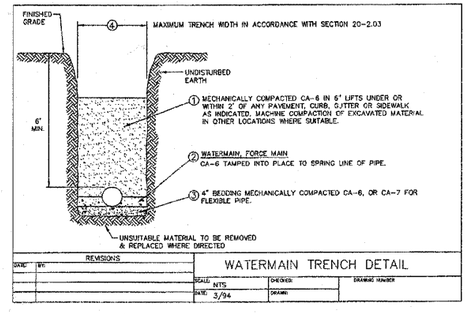

FINAL SURVEY — NOTE BOOK — SURVEYED — PLOTTED — TEMPLATE — AS-BUILT — AREAS CHECKED — NO. — BY — DATE

ORIGINAL SURVEY — NOTE BOOK — SURVEYED — PLOTTED — TEMPLATE — AS-BUILT — AREAS CHECKED — NO. — BY — DATE

CIVILTECH
450 E Devon Ave, Suite 300
Itasca, Illinois 60143
Tel: 630.773.3900 Fax: 630.773.3975
www.civiltechinc.com

DESIGNED - PK		REVISED -
DRAWN - PK		REVISED -
CHECKED - RTM		REVISED -
DATE - 3/25/2011		REVISED -

STATE OF ILLINOIS
DEPARTMENT OF TRANSPORTATION

DRAINAGE AND UTILITIES GENERAL NOTES AND DETAILS

SHEET NO. 2 OF 3 SHEETS

F.A.P. RTE.	SECTION	COUNTY	TOTAL SHEETS	SHEET NO.
361	06-00214-27-BR	KANE	87	29
		CONTRACT NO. 63595		
FED. ROAD DIST. NO. 1	ILLINOIS	FED. AID PROJECT		

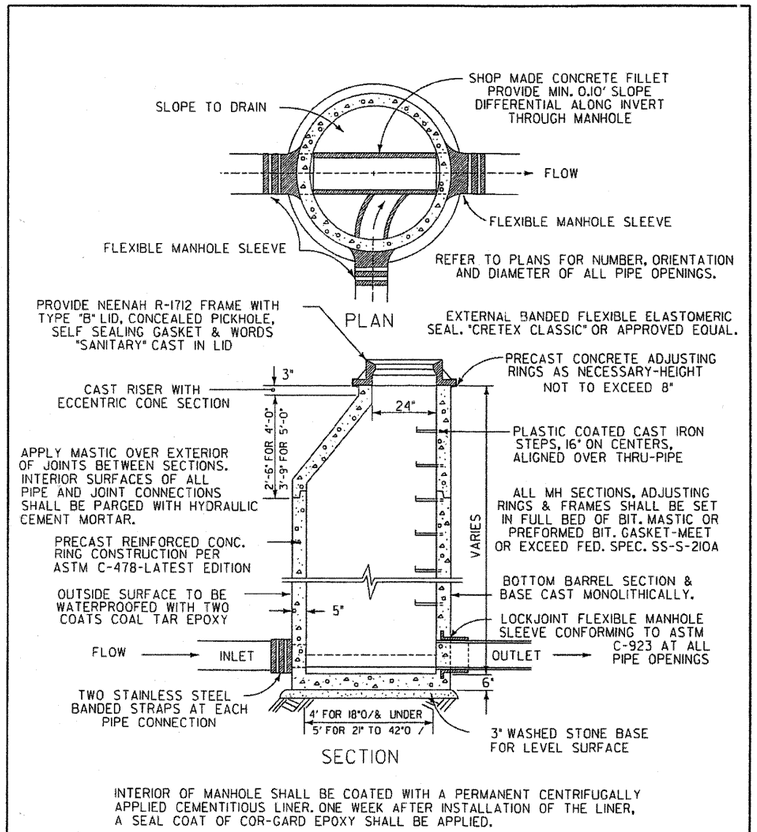

INTERIOR OF MANHOLE SHALL BE COATED WITH A PERMANENT CENTRIFUGALLY APPLIED CEMENTITIOUS LINER. ONE WEEK AFTER INSTALLATION OF THE LINER, A SEAL COAT OF COR-GARD EPOXY SHALL BE APPLIED.

SANITARY MANHOLE
N.T.S.

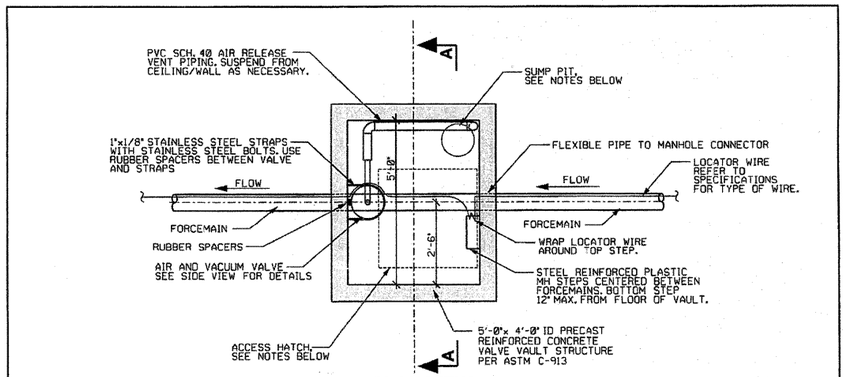

PLAN VIEW
N.T.S.

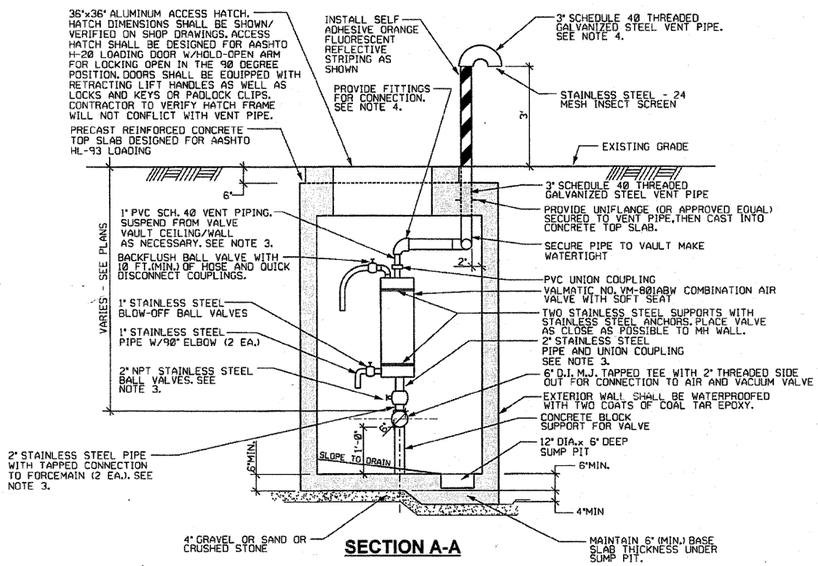

SECTION A-A

COMBINATION AIR VALVE IN VAULT DETAIL
N.T.S.

NOTE:
CONTRACTOR SHALL SUBMIT SHOP DRAWINGS OF VAULT WHICH INCLUDE COMPLETE STRUCTURAL REINFORCEMENT AS NOTED ON THIS DETAIL AND IN THE SPECIFICATIONS. SHOP DRAWINGS SHALL BE SIGNED AND SEALED BY AN ILLINOIS LICENSED STRUCTURAL ENGINEER.

NOTES:
1. CONTRACTOR SHALL PROVIDE ONE SET OF SPECIAL TOOLS, CALIBRATION DEVICES, OR INSTRUMENTS REQUIRED FOR OPERATION, CALIBRATION AND MAINTENANCE OF EQUIPMENT. CONTRACTOR SHALL PROVIDE ONLY ONE SET OF TOOLS FOR SIMILAR EQUIPMENT.
2. THE CONNECTING PIPE FOR THE AIR AND VACUUM VALVE SHALL NOT PROJECT INTO THE INTERIOR OF THE FORCEMAIN AND/OR INTERFERE WITH FUTURE PIPE PIGGING OF THE FORCEMAIN (BY OTHERS).
3. INLET AND OUTLET PIPING SHALL BE AS FOLLOWS:

FINAL SURVEY	BY	DATE
SURVEYED		
PLOTTED		
NOTE BOOK	PLANIMETER	
NO.	AREAS CHECKED	

ORIGINAL SURVEY	BY	DATE
SURVEYED		
PLOTTED		
NOTE BOOK	PLANIMETER	
NO.	AREAS CHECKED	

CIVILTECH
450 E Devon Ave, Suite 300
Itasca, Illinois 60143
Tel: 630.773.3900 Fax: 630.773.3975
www.civiltechinc.com

DESIGNED - PK		REVISED -
DRAWN - PK		REVISED -
CHECKED - RTM		REVISED -
DATE - 3/25/2011		REVISED -

STATE OF ILLINOIS
DEPARTMENT OF TRANSPORTATION

DRAINAGE AND UTILITIES GENERAL NOTES AND DETAILS

SHEET NO. 3 OF 3 SHEETS

F.A.P. RTE.	SECTION	COUNTY	TOTAL SHEETS	SHEET NO.
361	06-00214-27-BR	KANE	87	30
		CONTRACT NO. 63595		
FED. ROAD DIST. NO. 1	ILLINOIS	FED. AID PROJECT		

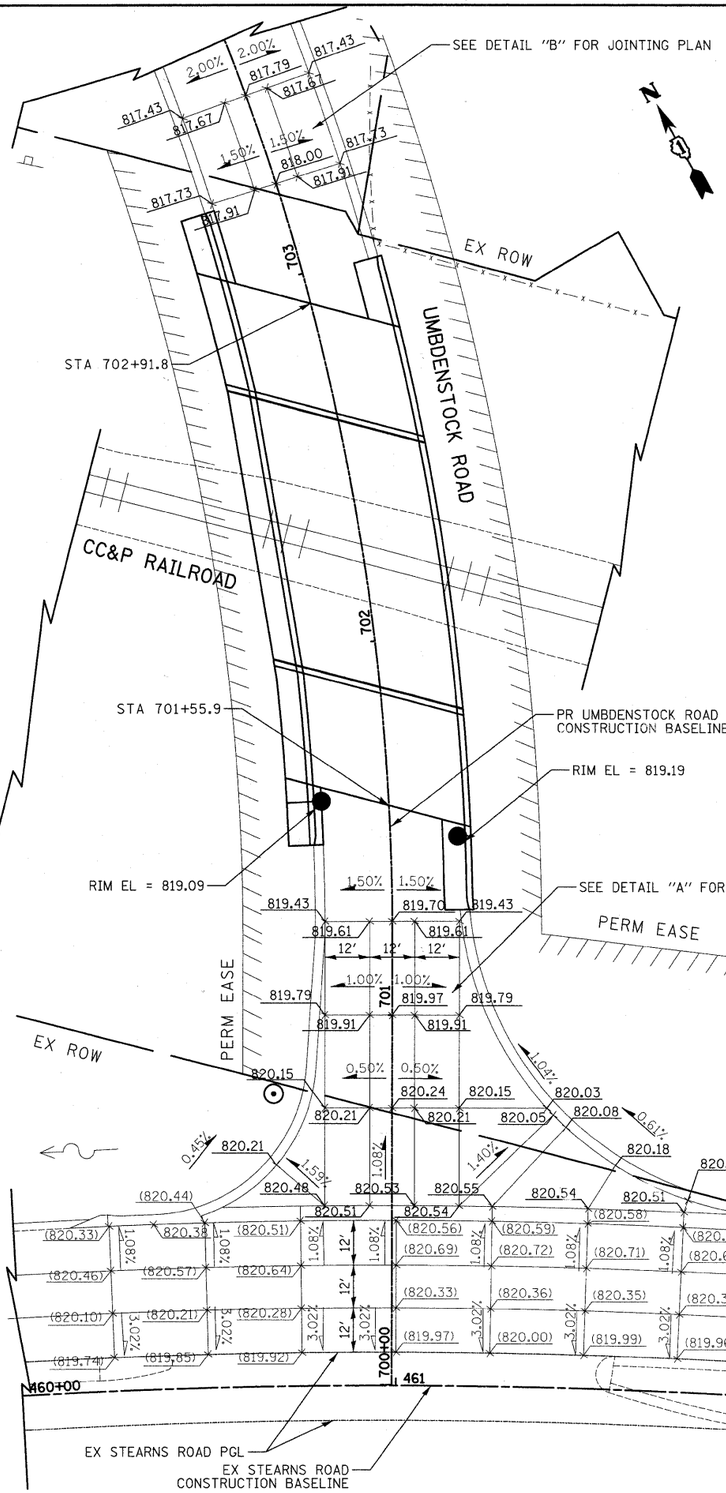

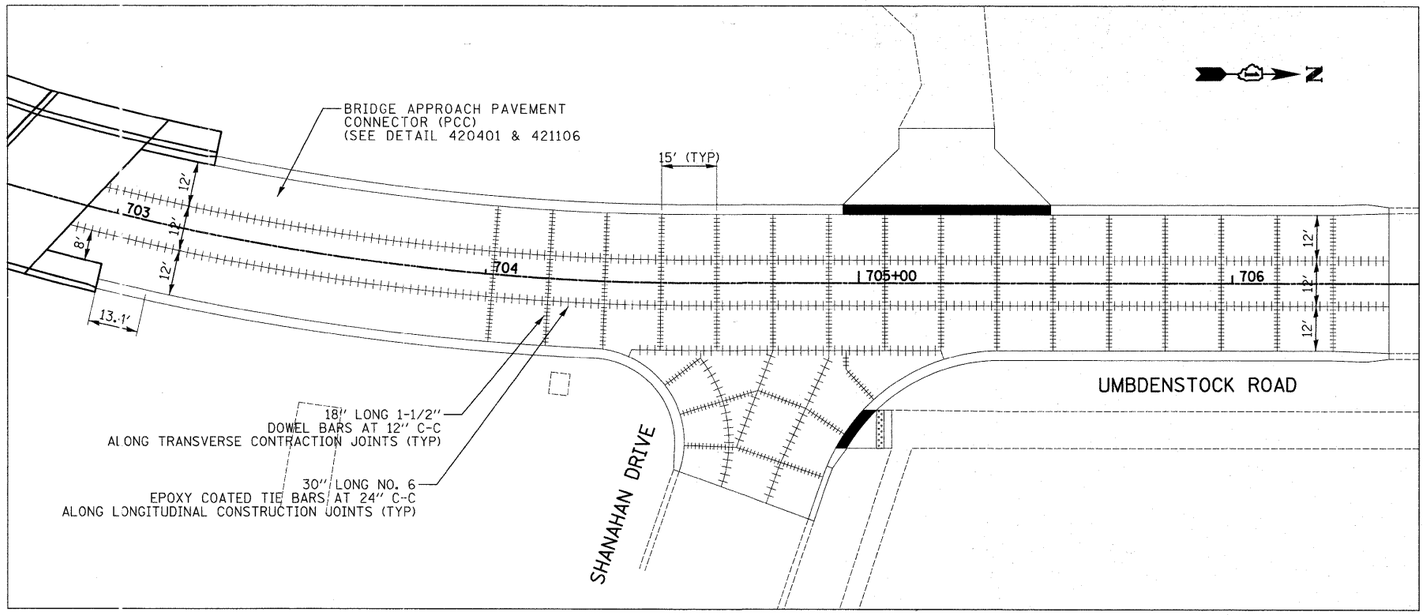

DETAIL "B"
JOINTING PLAN

LEGEND

XXX.XX	PR ELEVATION
(XXX.XX)	EX ELEVATION
	SWALE DRAINAGE

NOTE:

1. ALL ELEVATION ON THE INTERSECTION GRADING PLAN ARE SHOWN AT 25' INTERVALS UNLESS OTHERWISE NOTED.
2. MSE WALL TIE BACK AND SHOP DRAWINGS SHALL BE PREPARED AND INCLUDE DETAILS TO ADDRESS THE PROPOSED DRAINAGE STRUCTURE.

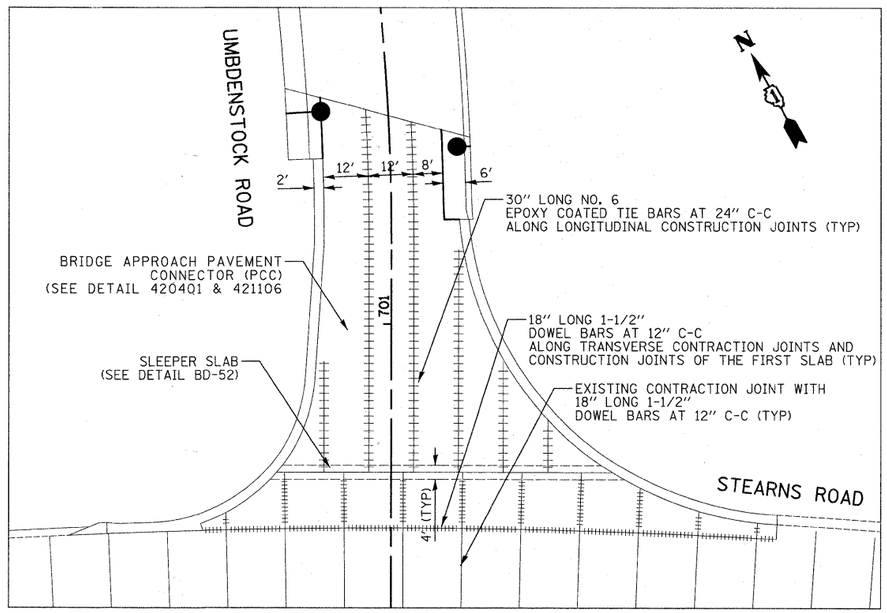

DETAIL "A"
JOINTING PLAN

FINAL SURVEY	SURVEYED	BY	DATE
	PLOTTED		
	TEMPLATE		
NOTE BOOK	AREAS		
NO.	AREAS CHECKED		

ORIGINAL SURVEY	SURVEYED	BY	DATE
	PLOTTED		
	TEMPLATE		
NOTE BOOK	AREAS		
NO.	AREAS CHECKED		

CIVILTECH
450 E Devon Ave, Suite 300
Itasca, Illinois 60143
Tel: 630.773.3900 Fax: 630.773.3975
www.civiltechinc.com

DESIGNED - PK		REVISED -
DRAWN - PK		REVISED -
CHECKED - RTM		REVISED -
DATE - 3/25/2011		REVISED -

STATE OF ILLINOIS
DEPARTMENT OF TRANSPORTATION

SCALES
HORIZ.0 20 40

INTERSECTION GRADING PLAN AND JOINTING PLAN

SHEET NO. 1 OF 1 SHEETS | STA. | TO STA.

F.A.P. RTE.	SECTION	COUNTY	TOTAL SHEETS	SHEET NO.
361	06-00214-27-BR	KANE	87	31
		CONTRACT NO. 63595		
FED. ROAD DIST. NO. 1	ILLINOIS	FED. AID PROJECT		

FINAL SURVEY	BY	DATE
NOTE BOOK	SURVEYED	
NO.	PLOTTED	
	TEMPLATE	
	AREAS	
	AREAS CHECKED	

ORIGINAL SURVEY	BY	DATE
NOTE BOOK	SURVEYED	
NO.	PLOTTED	
	TEMPLATE	
	AREAS	
	AREAS CHECKED	

LEGEND:

- PROPOSED SIGN
- EXISTING SIGN
- SEEDING, CLASS 2A

NOTE:

1. ALL PAVEMENT MARKINGS ON HMA PAVEMENT SHALL BE THERMOPLASTIC. ALL PAVEMENT MARKINGS ON CONCRETE PAVEMENT SHALL BE POLYUREA TYPE I.

2. ALL NEW SIGNS IN COUNTY R.O.W., EXCEPT THOSE MOUNTED ON TRAFFIC SIGNAL MAST ARMS, ARE TO BE FURNISHED AND INSTALLED BY KDOT SIGN SHOP. THE CONTRACTOR SHALL CONTACT RAY JOHNSON AT 630-669-7912 A MINIMUM OF 15 WORKING DAYS PRIOR TO THE DESIRED TIME OF INSTALLATION.

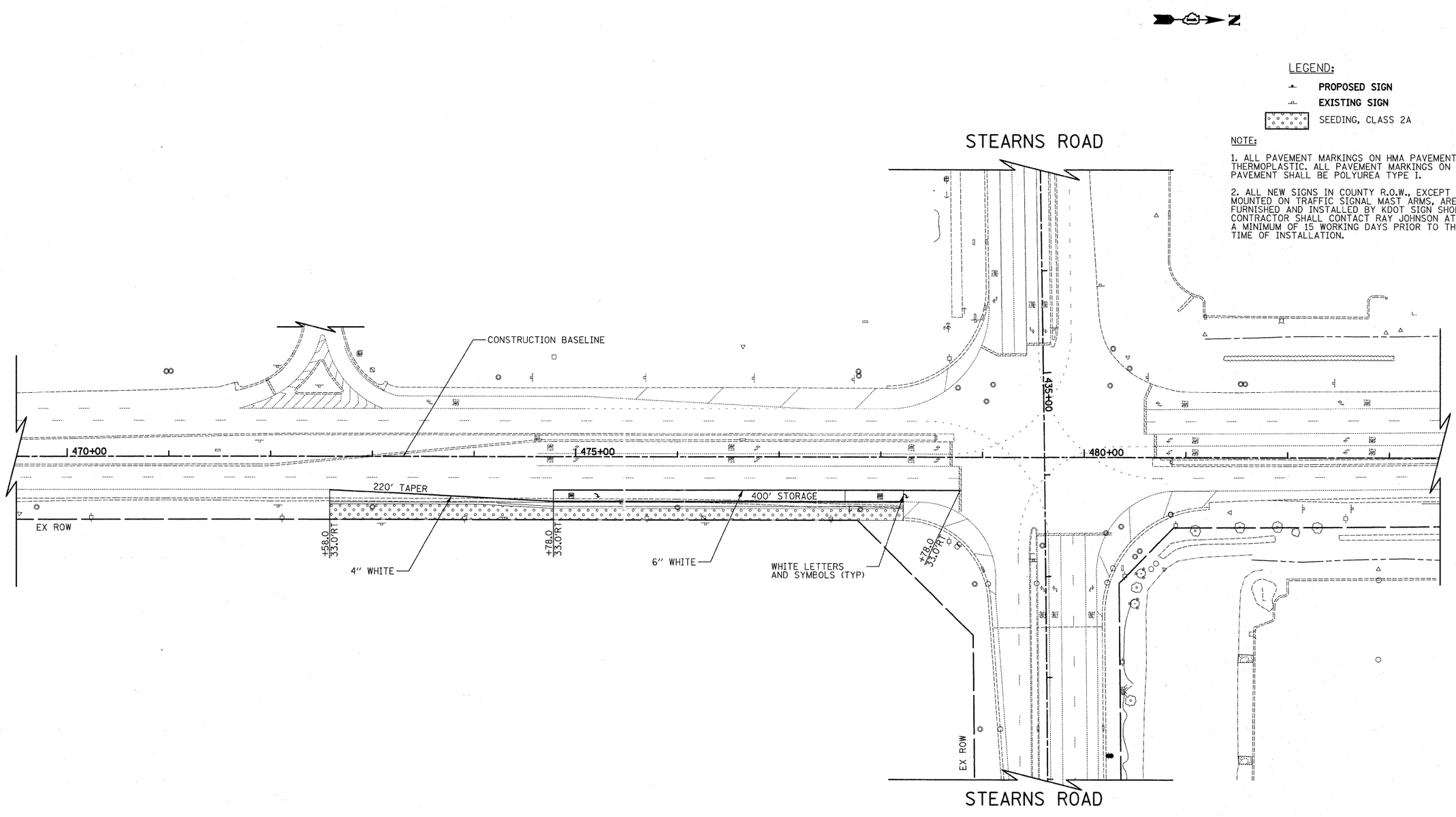

CIVILTECH
450 E Devon Ave, Suite 300
Itasca, Illinois 60143
Tel: 630.773.3900 Fax: 630.773.3975
www.civiltechinc.com

DESIGNED - PK	REVISED -
DRAWN - PK	REVISED -
CHECKED - RTM	REVISED -
DATE - 3/25/2011	REVISED -

STATE OF ILLINOIS
DEPARTMENT OF TRANSPORTATION

SCALES
VERT. 0 5 10
HORIZ. 0 50 100

PAVEMENT MARKING AND SIGNING

SHEET NO. 1 OF 2 SHEETS | STA. 469+50 | TO STA. 483+50

F.A.P. RTE.	SECTION	COUNTY	TOTAL SHEETS	SHEET NO.
361	06-00214-27-BR	KANE	87	32
		CONTRACT NO. 63595		
FED. ROAD DIST. NO. 1	ILLINOIS	FED. AID PROJECT		

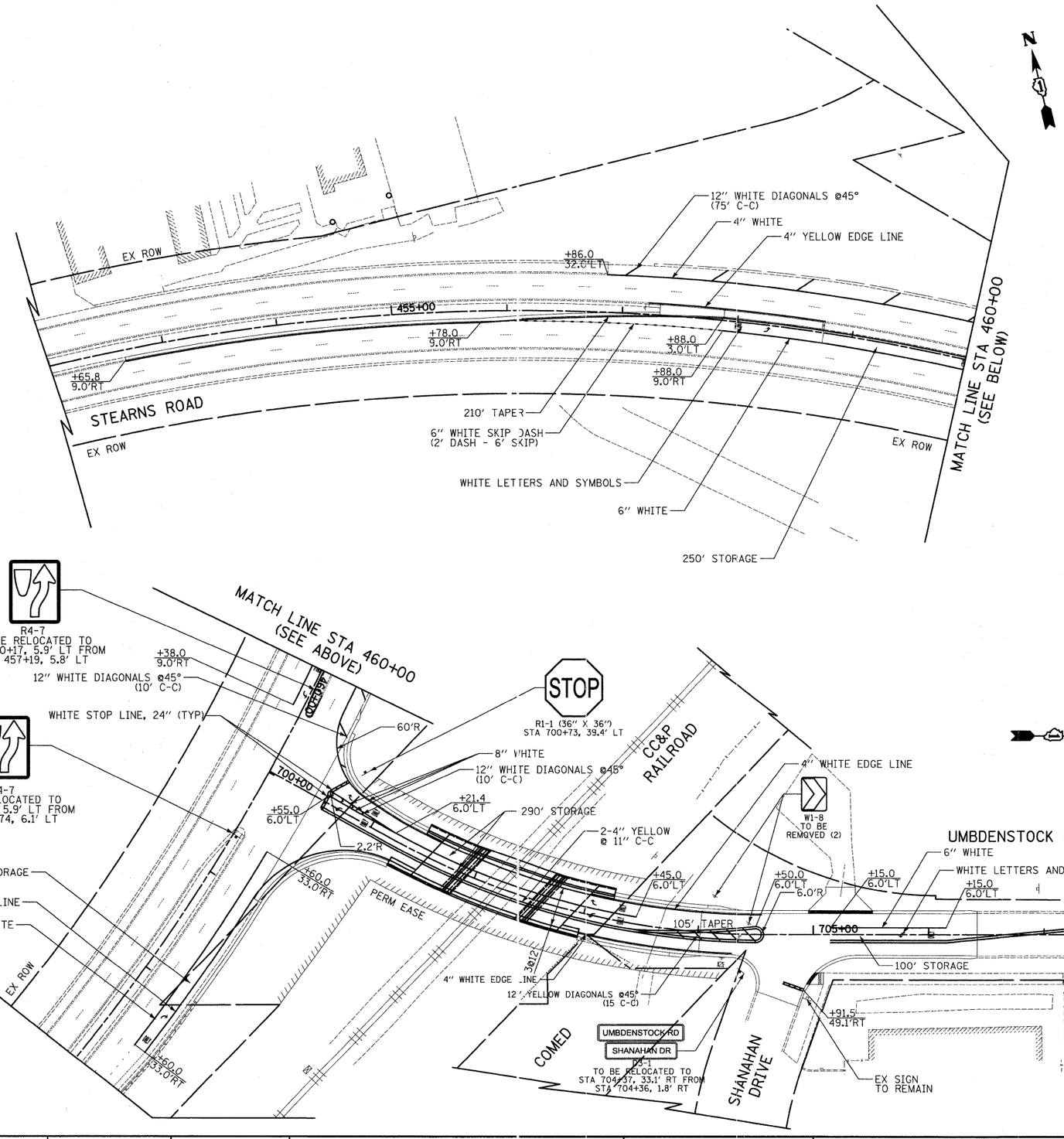

FINAL SURVEY		BY	DATE
	SURVEYED		
	PLOTTED		
NOTE BOOK	TRIANGULATE		
	AREAS		
NO.	AREAS CHECKED		

ORIGINAL SURVEY		BY	DATE
	SURVEYED		
	PLOTTED		
NOTE BOOK	TRIANGULATE		
	AREAS		
NO.	AREAS CHECKED		

CIVILTECH
450 E Devon Ave, Suite 300
Itasca, Illinois 60143
Tel: 630.773.3900 Fax: 630.773.3975
www.civiltechinc.com

DESIGNED - PK	REVISED -	
DRAWN - PK	REVISED -	
CHECKED - RTM	REVISED -	
DATE - 3/25/2011	REVISED -	

STATE OF ILLINOIS
DEPARTMENT OF TRANSPORTATION

SCALES
HORIZ. 0 50 100

PAVEMENT MARKING AND SIGNING

SHEET NO. 2 OF 2 SHEETS | STA. 700+44.8 TO STA. 706+42.0

F.A.P. RTE.	SECTION	COUNTY	TOTAL SHEETS	SHEET NO.
361	06-00214-27-BR	KANE	87	33
		CONTRACT NO. 63595		
FED. ROAD DIST. NO. 1	ILLINOIS	FED. AID PROJECT		

Benchmark: B.M.6 "Chiseled Box Cut" on top of guard wall at the south-east corner of the existing bridge crossing RR tracks, Sta. 702+15.50, Offset 168.85' Lt., Elev. 821.986

Existing Structure: To be removed after the construction of the new bridge. The existing structure (SN 045-3135) was built in 1990 and is a 3 span continuous horizontally curved steel rolled beam bridge. The bridge is supported by two stub abutment founded on driven piles and two piers founded on spread footings. The bridge length is 151'-10⅛" bk. to bk. of abutments and is 37'-2" wide out to out. (Not visible in plan view).

No Salvage.

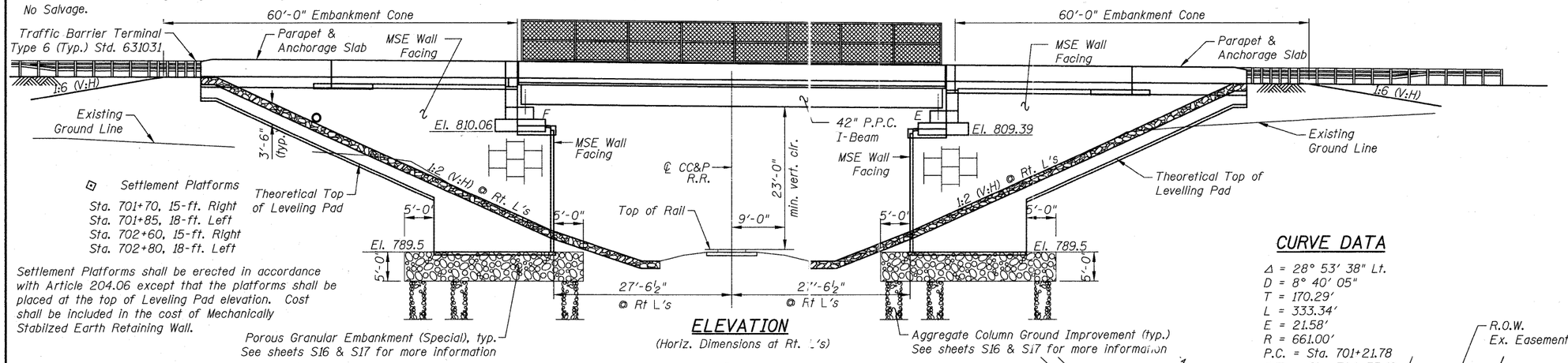

Settlement Platforms shall be erected in accordance with Article 204.06 except that the platforms shall be placed at the top of Leveling Pad elevation. Cost shall be included in the cost of Mechanically Stabilzed Earth Retaining Wall.

ELEVATION

(Horiz. Dimensions at Rt. L's)

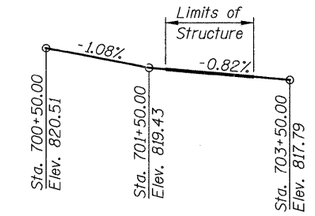

UMBDENSTOCK ROAD PROFILE

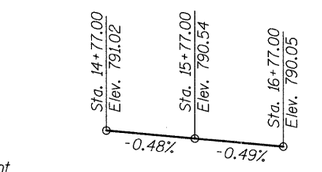

CC&P R.R. PROFILE

CURVE DATA

Δ = 28° 53' 38" Lt.
D = 8° 40' 05"
T = 170.29'
L = 333.34'
E = 21.58'
R = 661.00'
P.C. = Sta. 701+21.78
P.T. = Sta. 704+55.12
P.I. = Sta. 702+92.07

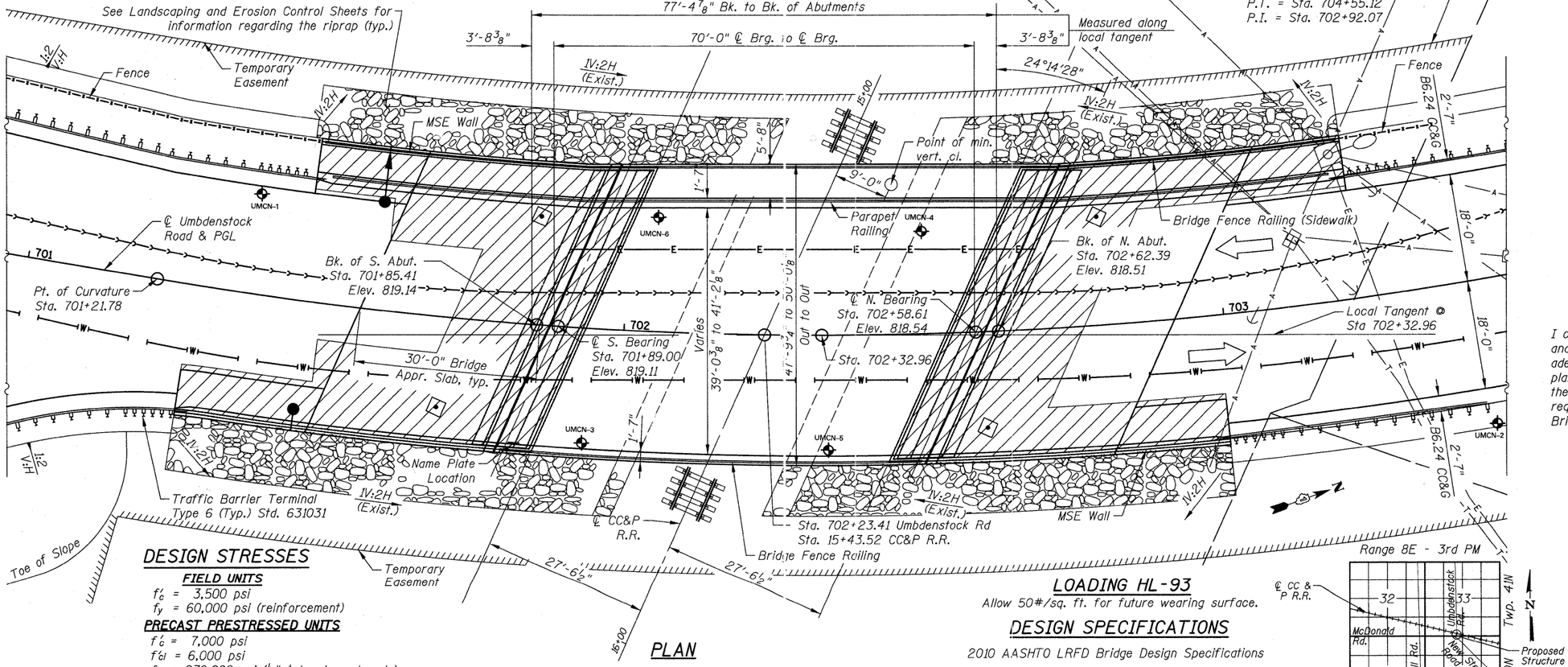

PLAN

DESIGN STRESSES

FIELD UNITS
f'_c = 3,500 psi
f_y = 60,000 psi (reinforcement)

PRECAST PRESTRESSED UNITS
f'_c = 7,000 psi
f'_{ci} = 6,000 psi
f_{pu} = 270,000 psi (½" ϕ low lax. strands)
f_{pbt} = 201,960 psi (½" ϕ low lax. strands)

PRECAST UNITS
f'_c = 4,500 psi (Precast MSE Panels)

LOADING HL-93

Allow 50#/sq. ft. for future wearing surface.

DESIGN SPECIFICATIONS

2010 AASHTO LRFD Bridge Design Specifications

SEISMIC DATA

Seismic Performance Zone (SPZ) = 1
Design Spectral Acceleration at 1.0 sec. (S_{D1}) = 0.207
Design Spectral Acceleration at 0.2 sec. (S_{DS}) = 0.066
Soil Site Class = D

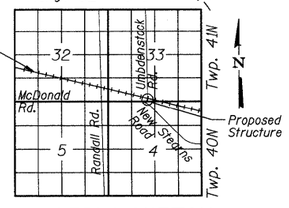

LOCATION SKETCH

CIVILTECH ENGINEERING, INC.
GREGORY J. HATLESTAD, S.E.

STATE OF ILLINOIS — GREGORY J. HATLESTAD — 081-005562 — I CERTIFY STRUCTURAL ENGINEER — CHICAGO, IL

GREGORY J. HATLESTAD, S.E.
081-005562

EXP 11/30/2012

DATE 5/11/2011

I certify that to the best knowledge, information and belief, this bridge design is structurally adequate for the design loading shown on the plans. The design is an economical one for the style of the structure and complies with requirements of the current AASHTO LRFD Bridge Design Specifications.

GENERAL PLAN & ELEVATION
UMBDENSTOCK ROAD OVER CC&P R.R. TRACKS
SECTION 06-00214-27-BR
KANE COUNTY
STATION 702+23.41
STRUCTURE NO. 045-3162

CIVILTECH
450 E Devon Ave, Suite 300
Itasca, Illinois 60143
Tel: 630.773.3900 Fax: 630.773.3975
www.civiltechinc.com

DESIGNED	D. Atkins	REVISED	4-11-11
DRAWN	D. Atkins	REVISED	
CHECKED	G. Hatlestad	REVISED	
DATE	March 25, 2011	REVISED	

STATE OF ILLINOIS
DEPARTMENT OF TRANSPORTATION

UMBDENSTOCK ROAD OVER CC&P RR
STRUCTURE NO. 045-3162
SHEET NO. S1 OF S28 SHEETS

F.A.P. RTE.	SECTION	COUNTY	TOTAL SHEETS	SHEET NO.
361	06-00214-27-BR	KANE	87	34
		CONTRACT NO. 63595		
FED. ROAD DISTRICT 1	ILLINOIS	FED. AID PROJECT		

J:\2372\cad\structure\01_gpe.dgn
3:20:34 PM
mfl
4/7/2011

GENERAL NOTES

Calculated weight of Structural Steel = 4,430 pounds

Reinforcement bars shall conform to the requirements of ASTM A 706 Gr 60. See Special Provisions.

Reinforcement bars designated (E) shall be epoxy coated.

Concrete Sealer shall be applied to the designated areas of the backwalls and bridge seats of the abutments.

The embankment configuration shown shall be the minimum that must be placed and compacted prior to construction of the abutments.

INDEX OF SHEETS

S1. General Plan & Elevation
S2. General Data
S3. Top of Slab Elevations I
S4. Top of Slab Elevations II
S5. Top of Approach Slab Elevations
S6. Superstructure
S7. Superstructure Details
S8. Railing Post Spacing
S8A. Railing Details
S9. Preformed Joint Strip Seal
S10. Framing Plan
S11. 42" PPC I-Beam Details
S12. Bearing Details
S13. South Abutment
S14. North Abutment
S15. Abutment Details
S16. MSE Wall Details I
S17. MSE Wall Details II
S18. Northwest and Northeast Anchorage Slab
S19. Southwest and Southeast Anchorage Slab
S20. Anchorage Slab Details
S21. Bridge Approach Slab
S22. Bridge Approach Slab Details I
S23. Bridge Approach Slab Details II
S24. Utility Hanger Details
S25. Bar Splicer Assembly and Mechanical Splicer Details
S26. Boring Logs I
S27. Boring Logs II
S28. Boring Logs III

TOTAL BILL OF MATERIAL

	ITEM	UNIT	SUPER	SUB	TOTAL
	Removal of Existing Structures	Each			1
	Slope Wall Removal	Sq. Yd.		569	569
	Protective Shield	Sq. Yd.	354		354
	Structure Excavation	Cu. Yd.		2,137	2,137
	Concrete Structures	Cu. Yd.		159.4	159.4
	Concrete Superstructure	Cu. Yd.	321.4		321.4
	Bridge Deck Grooving	Sq. Yd.	559		559
	Protective Coat	Sq. Yd.	899		899
	Furnishing and Erecting Precast Prestressed Concrete I-beams, 42 in.	Foot	499		499
	Bar Splicers	Each	104		104
	Reinforcement Bars, Epoxy Coated	Pound	69,500	15,370	84,870
	Bridge Fence Railing	Foot	72		72
	Bridge Fence Railing (Sidewalk)	Foot	171		171
	Parapet Railing	Foot	168		168
	Name Plates	Each	1		1
	Preformed Joint Strip Seal	Foot	108		108
	Elastomeric Bearing Assembly, Type I	Each	7		7
	Steel Bearing Assembly	Each	7		7
	Anchor Bolts, 1"	Each	28		28
	Concrete Sealer	Sq. Ft.		592	592
*	Aggregate Column Ground Improvement	L. Sum		1	1
*	Porous Granular Embankment (Special)	Cu. Yd.		723	723
*	Mechanically Stabilized Earth Retaining Wall	Sq. Ft.		5,514	5,514

* See Special Provisions

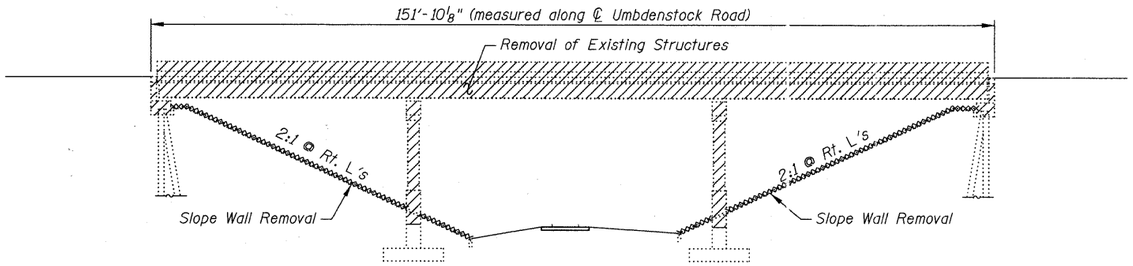

ELEVATION

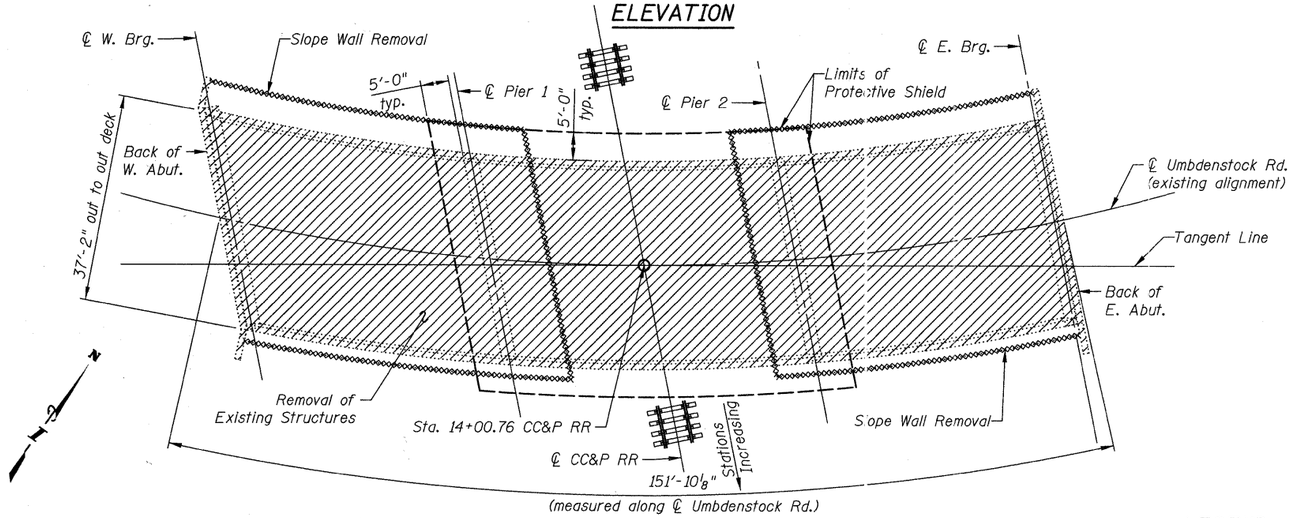

PLAN

EXISTING BRIDGE REMOVAL

LEGEND

Existing Structure to be Removed

Existing Slope Wall to be Removed

C.C. & P. R.R.
BUILT 201_ BY
STATE OF ILLINOIS
SEC. 06-00214-27-BR
STA. 702+23.41 LOADING HL-93
STRUCTURE NO. 045-3162

NAME PLATE
See Std. 515001

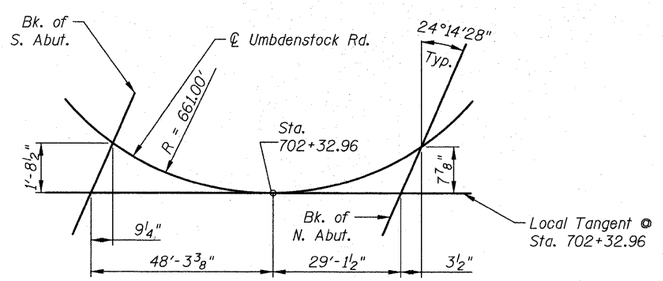

OFFSET SKETCH

PROPOSED BRIDGE

CIVILTECH
450 E Devon Ave, Suite 300
Itasca, Illinois 60143
Tel: 630.773.3900 Fax: 630.773.3975
www.civiltechinc.com

DESIGNED	D. Atkins	REVISED	4-11-11
DRAWN	D. Atkins	REVISED	-
CHECKED	G. Hatlestad	REVISED	-
DATE	March 25, 2011	REVISED	-

STATE OF ILLINOIS
DEPARTMENT OF TRANSPORTATION

GENERAL DATA
UMBDENSTOCK ROAD OVER CC&P RR
STRUCTURE NO. 045-3162
SHEET NO. S2 OF S28 SHEETS

F.A.P. RTE.	SECTION	COUNTY	TOTAL SHEETS	SHEET NO.
361	06-00214-27-BR	KANE	87	35
		CONTRACT NO. 63595		
FED. ROAD DISTRICT 1	ILLINOIS	FED. AID PROJECT		

mfi 4/7/2011 3:20:37 PM J:\2372\cad\struct\02_General Data.dgn

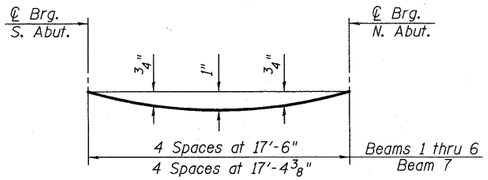

DEAD LOAD DEFLECTION DIAGRAM

(Includes weight of concrete, excluding beams).

Note:
The above deflections are not to be used in the field if the engineer is working from the grade elevations adjusted for dead load deflections as shown below.

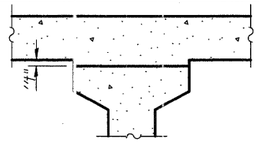

INTERIOR BEAMS

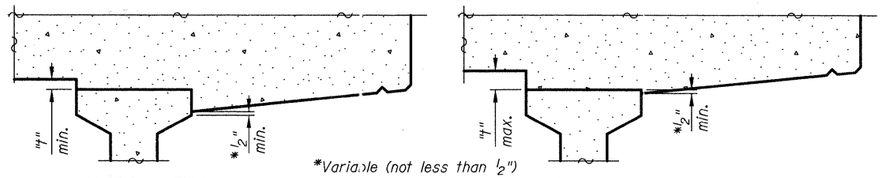

EXTERIOR BEAMS

METHOD OF DETERMINING FILLET HEIGHTS "t"

After all beams have been erected, elevations of the top flanges of the beams shall be taken at the intervals shown on the plans. These elevations subtracted from the "Theoretical Grade Elevations Adjusted for Dead Load Deflection" shown on the plans, minus slab thickness equals the fillet heights "t" above top flange of beams.

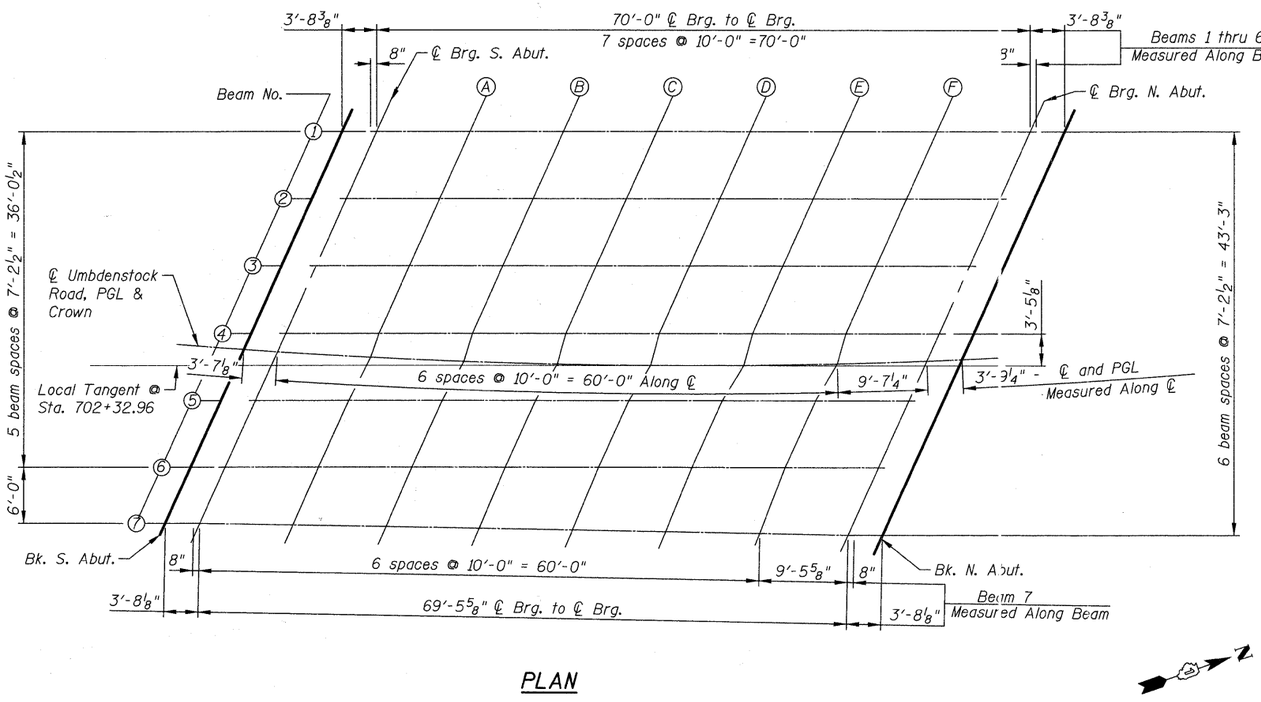

PLAN

BEAM 1

Location	Station	Offset	Theoretical Grade Elevations	Theoretical Grade Elevations Adjusted For Dead Load Deflection
Bk. S. Abut.	701+94.55	-23.98	818.69	818.69
℄ Brg. S. Abut.	701+98.38	-24.19	818.66	818.66
A	702+08.75	-24.63	818.56	818.60
B	702+19.14	-24.92	818.47	818.54
C	702+29.53	-25.05	818.39	818.47
D	702+39.92	-25.02	818.30	818.38
E	702+50.32	-24.84	818.22	818.28
F	702+60.70	-24.50	818.14	818.17
℄ Brg. N. Abut.	702+71.06	-24.00	818.06	818.06
Bk. N. Abut.	702+74.90	-23.77	818.03	818.03

BEAM 2

Location	Station	Offset	Theoretical Grade Elevations	Theoretical Grade Elevations Adjusted For Dead Load Deflection
Bk. S. Abut.	701+91.65	-16.59	818.83	818.83
℄ Brg. S. Abut.	701+95.44	-16.81	818.79	818.79
A	702+05.69	-17.30	818.70	818.74
B	702+15.96	-17.64	818.61	818.68
C	702+26.23	-17.81	818.53	818.61
D	702+36.51	-17.84	818.44	818.52
E	702+46.76	-17.71	818.36	818.42
F	702+57.06	-17.42	818.28	818.32
℄ Brg. N. Abut.	702+67.31	-16.98	818.20	818.20
Bk. N. Abut.	702+71.11	-16.78	818.17	818.17

BEAM 3

Location	Station	Offset	Theoretical Grade Elevations	Theoretical Grade Elevations Adjusted For Dead Load Deflection
Bk. S. Abut.	701+88.82	-9.19	818.97	818.97
℄ Brg. S. Abut.	701+92.57	-9.42	818.93	818.93
A	702+02.70	-9.96	818.84	818.88
B	702+12.85	-10.34	818.75	818.82
C	702+23.01	-10.57	818.67	818.74
D	702+33.17	-10.64	818.58	818.66
E	702+43.34	-10.56	818.50	818.56
F	702+53.49	-10.33	818.42	818.46
℄ Brg. N. Abut.	702+63.64	-9.94	818.34	818.34
Bk. N. Abut.	702+67.40	-9.76	818.31	818.31

CIVILTECH
450 E Devon Ave, Suite 300
Itasca, Illinois 60143
Tel: 630.773.3900 Fax: 630.773.3975
www.civiltechinc.com

DESIGNED - D. Atkins	REVISED -	
DRAWN - D. Atkins	REVISED -	
CHECKED - G. Hatlestad	REVISED -	
DATE - March 25, 2011	REVISED -	

STATE OF ILLINOIS
DEPARTMENT OF TRANSPORTATION

TOP OF SLAB ELEVATIONS I
UMBDENSTOCK ROAD OVER CC&P RR
STRUCTURE NO. 045-3162
SHEET NO. 53 OF S28 SHEETS

F.A.P. RTE.	SECTION	COUNTY	TOTAL SHEETS	SHEET NO.
361	06-00214-27-BR	KANE	87	36
		CONTRACT NO. 63595		
FED. ROAD DISTRICT 1	ILLINOIS	FED. AID PROJECT		

J:\2372\cad\struct\03_Top of Slab Elev I.dgn
4:16:27 PM
3/24/2011

BEAM 4

Location	Station	Offset	Theoretical Grade Elevations	Theoretical Grade Elevations Adjusted For Dead Load Deflection
Bk. S. Abut.	701+86.06	-1.77	819.11	819.11
℄ Brg. S. Abut.	701+89.76	-2.02	819.07	819.07
A	701+99.78	-2.60	818.98	819.02
B	702+09.81	-3.03	818.89	818.96
C	702+19.86	-3.30	818.81	818.88
D	702+29.91	-3.42	818.72	818.80
E	702+39.96	-3.39	818.64	818.70
F	702+50.01	-3.21	818.56	818.60
℄ Brg. N. Abut.	702+60.05	-2.88	818.48	818.48
Bk. N. Abut.	702+63.76	-2.72	818.45	818.45

℄ UMBDENSTOCK RD., PGL & CROWN

Location	Station	Offset	Theoretical Grade Elevations	Theoretical Grade Elevations Adjusted For Dead Load Deflection
Bk. S. Abut.	701+85.41	0.00	819.14	819.14
℄ Brg. S. Abut.	701+89.00	0.00	819.11	819.11
A	701+99.00	0.00	819.03	819.06
B	702+09.00	0.00	818.95	819.01
C	702+19.00	0.00	818.86	818.94
D	702+29.00	0.00	818.78	818.86
E	702+39.00	0.00	818.70	818.76
F	702+49.00	0.00	818.62	818.65
℄ Brg. N. Abut.	702+58.61	0.00	818.54	818.54
Bk. N. Abut.	702+62.39	0.00	818.51	818.51

BEAM 5

Location	Station	Offset	Theoretical Grade Elevations	Theoretical Grade Elevations Adjusted For Dead Load Deflection
Bk. S. Abut.	701+83.35	5.65	819.07	819.07
℄ Brg. S. Abut.	701+87.02	5.39	819.04	819.04
A	701+96.92	4.77	818.97	819.01
B	702+06.84	4.30	818.90	818.96
C	702+16.77	3.98	818.82	818.90
D	702+26.71	3.81	818.74	818.82
E	702+36.66	3.79	818.66	818.72
F	702+46.60	3.92	818.58	818.61
℄ Brg. N. Abut.	702+56.53	4.20	818.49	818.49
Bk. N. Abut.	702+60.21	4.34	818.46	818.46

BEAM 6

Location	Station	Offset	Theoretical Grade Elevations	Theoretical Grade Elevations Adjusted For Dead Load Deflection
Bk. S. Abut.	701+80.71	13.09	818.97	818.97
℄ Brg. S. Abut.	701+84.33	12.81	818.95	818.95
A	701+94.12	12.15	818.88	818.91
B	702+03.93	11.63	818.81	818.87
C	702+13.76	11.27	818.73	818.81
D	702+23.59	11.05	818.65	818.73
E	702+33.42	10.99	818.57	818.64
F	702+43.26	11.07	818.49	818.53
℄ Brg. N. Abut.	702+53.09	11.30	818.41	818.41
Bk. N. Abut.	702+56.73	11.42	818.38	818.38

BEAM 7

Location	Station	Offset	Theoretical Grade Elevations	Theoretical Grade Elevations Adjusted For Dead Load Deflection
Bk. S. Abut.	701+78.58	19.22	818.90	818.90
℄ Brg. S. Abut.	701+82.14	18.99	818.87	818.87
A	701+91.85	18.47	818.80	818.83
B	702+01.58	18.10	818.72	818.79
C	702+11.31	17.87	818.65	818.73
D	702+21.04	17.79	818.57	818.65
E	702+30.78	17.86	818.49	818.55
F	702+40.52	18.07	818.41	818.44
℄ Brg. N. Abut.	702+49.72	18.41	818.32	818.32
Bk. N. Abut.	702+53.29	18.58	818.29	818.29

CIVILTECH
450 E Devon Ave, Suite 300
Itasca, Illinois 60143
Tel: 630.773.3900 Fax: 630.773.3975
www.civiltechinc.com

DESIGNED	D. Atkins	REVISED	-
DRAWN	D. Atkins	REVISED	-
CHECKED	G. Hatlestad	REVISED	-
DATE	March 25, 2011	REVISED	-

STATE OF ILLINOIS
DEPARTMENT OF TRANSPORTATION

TOP OF SLAB ELEVATIONS II
UMBDENSTOCK ROAD OVER CC&P RR
STRUCTURE NO. 045-3162
SHEET NO. S4 OF S28 SHEETS

F.A.P. RTE.	SECTION	COUNTY	TOTAL SHEETS	SHEET NO.
361	06-00214-27-BR	KANE	87	37
		CONTRACT NO. 63595		
FED. ROAD DISTRICT 1	ILLINOIS	FED. AID PROJECT		

m:\
3/24/2011 4:16:28 PM J:\2372\cad\struct\04_Top of Slab Elev II.dgn

EAST EDGE OF SHOULDER

Location	Station	Offset	Theoretical Grade Elevations
S. End S. Appr. Pav't	701+49.80	20.00	819.12
A	701+59.51	20.00	819.04
B	701+69.22	20.00	818.96
N. End S. Appr. Pav't	701+78.82	20.00	818.88
S. End N. Appr. Pav't	702+52.08	20.00	818.28
C	702+61.79	20.00	818.20
D	702+71.49	20.00	818.12
N. End N. Appr. Pav't	702+80.96	20.00	818.04

EAST EDGE OF PAVEMENT

Location	Station	Offset	Theoretical Grade Elevations
S. End S. Appr. Pav't	701+50.40	18.00	819.15
A	701+60.13	18.00	819.07
B	701+69.87	18.00	818.99
N. End S. Appr. Pav't	701+79.52	18.00	818.91
S. End N. Appr. Pav't	702+53.03	18.00	818.30
C	702+62.76	18.00	818.22
D	702+72.50	18.00	818.14
N. End N. Appr. Pav't	702+82.02	18.00	818.07

℄ UMBDENSTOCK RD., PGL & CROWN

Location	Station	Offset	Theoretical Grade Elevations
S. End S. Appr. Pav't	701+55.94	0.00	819.38
A	701+65.94	0.00	819.30
B	701+75.94	0.00	819.22
N. End S. Appr. Pav't	701+85.94	0.00	819.14
S. End N. Appr. Pav't	702+61.83	0.00	818.51
C	702+71.83	0.00	818.43
D	702+81.83	0.00	818.35
N. End N. Appr. Pav't	702+91.83	0.00	818.27

WEST EDGE OF PAVEMENT

Location	Station	Offset	Theoretical Grade Elevations
S. End S. Appr. Pav't	701+61.80	-18.00	819.05
A	701+72.08	-18.00	818.97
B	701+82.36	-18.00	818.88
N. End S. Appr. Pav't	701+92.75	-18.00	818.80
S. End N. Appr. Pav't	702+71.24	-18.10	818.15
C	702+81.52	-18.00	818.07
D	702+91.80	-18.00	817.99
N. End N. Appr. Pav't	703+02.27	-18.00	817.90

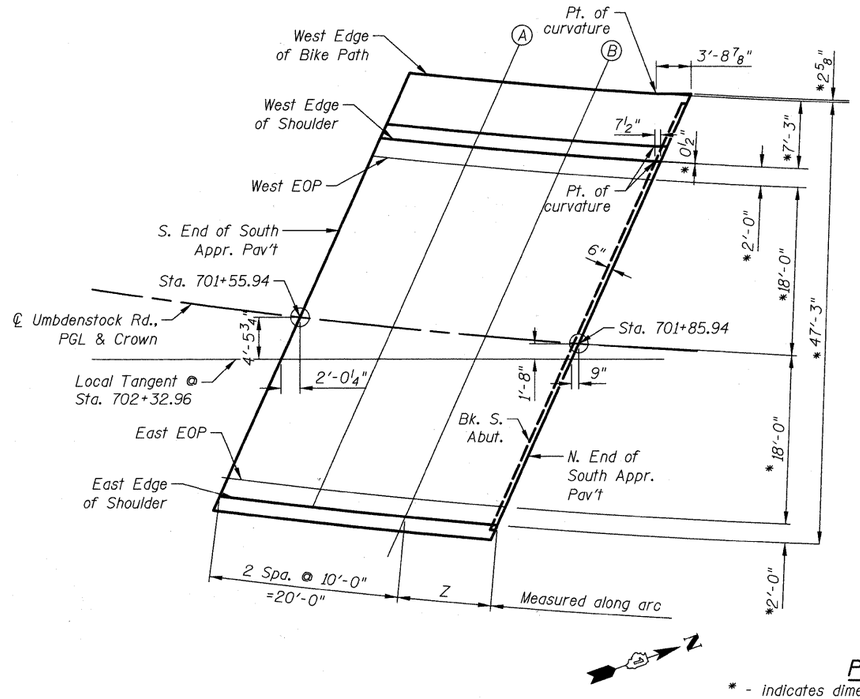

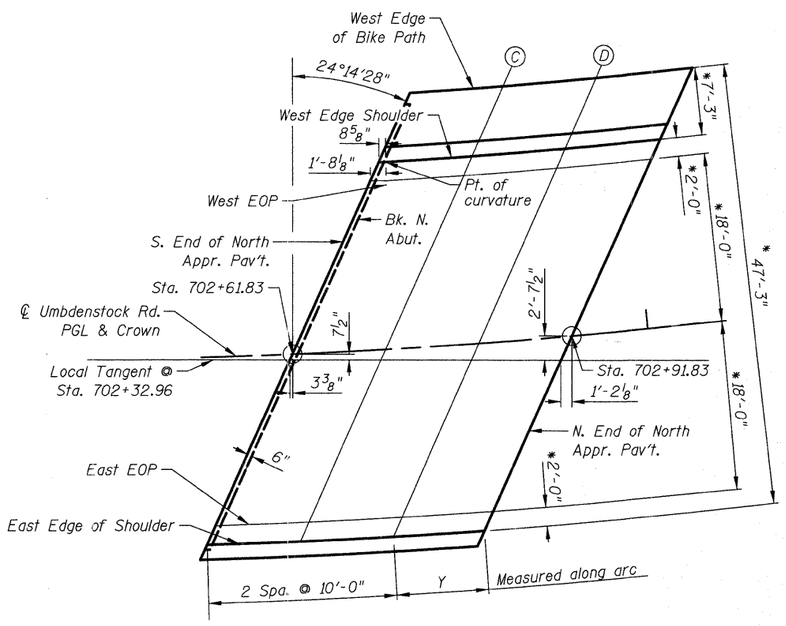

PLAN

* - indicates dimensions are radial

WEST EDGE OF SHOULDER

Location	Station	Offset	Theoretical Grade Elevations
S. End S. Appr. Pav't	701+62.48	-20.00	819.02
A	701+72.79	-20.00	818.93
B	701+83.10	-20.00	818.85
N. End S. Appr. Pav't	701+93.53	-20.04	818.76
S. End N. Appr. Pav't	702+72.29	-20.05	818.11
C	702+82.60	-20.00	818.03
D	702+92.91	-20.00	817.95
N. End N. Appr. Pav't	703+03.48	-20.00	817.86

WEST EDGE OF BIKE PATH

Location	Station	Offset	Theoretical Grade Elevations
S. End S. Appr. Pav't	701+64.96	-27.25	818.88
A	701+75.39	-27.25	818.80
B	701+85.82	-27.25	818.71
N. End S. Appr. Pav't	701+96.49	-27.47	818.62
S. End N. Appr. Pav't	702+76.23	-27.25	817.97
C	702+86.66	-27.25	817.88
D	702+97.09	-27.25	817.80
N. End N. Appr. Pav't	703+07.92	-27.25	817.71

LENGTH ALONG ARC, "Z" & "Y"

Location	Arc Length "Z"	Arc Length "Y"
West Edge of Bike Path	10'-3" **	10'-4 1/2"
West Edge of Shoulder	10'-1 1/2" **	10'-3"
West Edge of Pavement	10'-1 1/4"	10'-2 3/8"
℄ Roadway, Profile Grade	10'-0"	10'-0"
East Edge of Pavement	9'-10 7/8"	9'-9 3/8"
East Edge of Shoulder	9'-10 3/4"	9'-9 1/8"

** Indicates total length of tangent and arc

CIVILTECH
450 E Devon Ave, Suite 300
Itasca, Illinois 60143
Tel: 630.773.3900 Fax: 630.773.3975
www.civiltechinc.com

DESIGNED	D. Atkins	REVISED	-
DRAWN	D. Atkins	REVISED	-
CHECKED	G. Hatlestad	REVISED	-
DATE	March 25, 2011	REVISED	-

STATE OF ILLINOIS
DEPARTMENT OF TRANSPORTATION

TOP OF APPROACH SLAB ELEVATIONS
UMBDENSTOCK ROAD OVER CC&P RR
STRUCTURE NO. 045-3162
SHEET NO. S5 OF S28 SHEETS

F.A.P. RTE.	SECTION	COUNTY	TOTAL SHEETS	SHEET NO.
361	06-00214-27-BR	KANE	87	38
		CONTRACT NO. 63595		
FED. ROAD DISTRICT 1	ILLINOIS	FED. AID PROJECT		

mfi 3/24/2011 4:16:29 PM J:\2372\cad\struct\05_Top of Appr Slab Elev.dgn

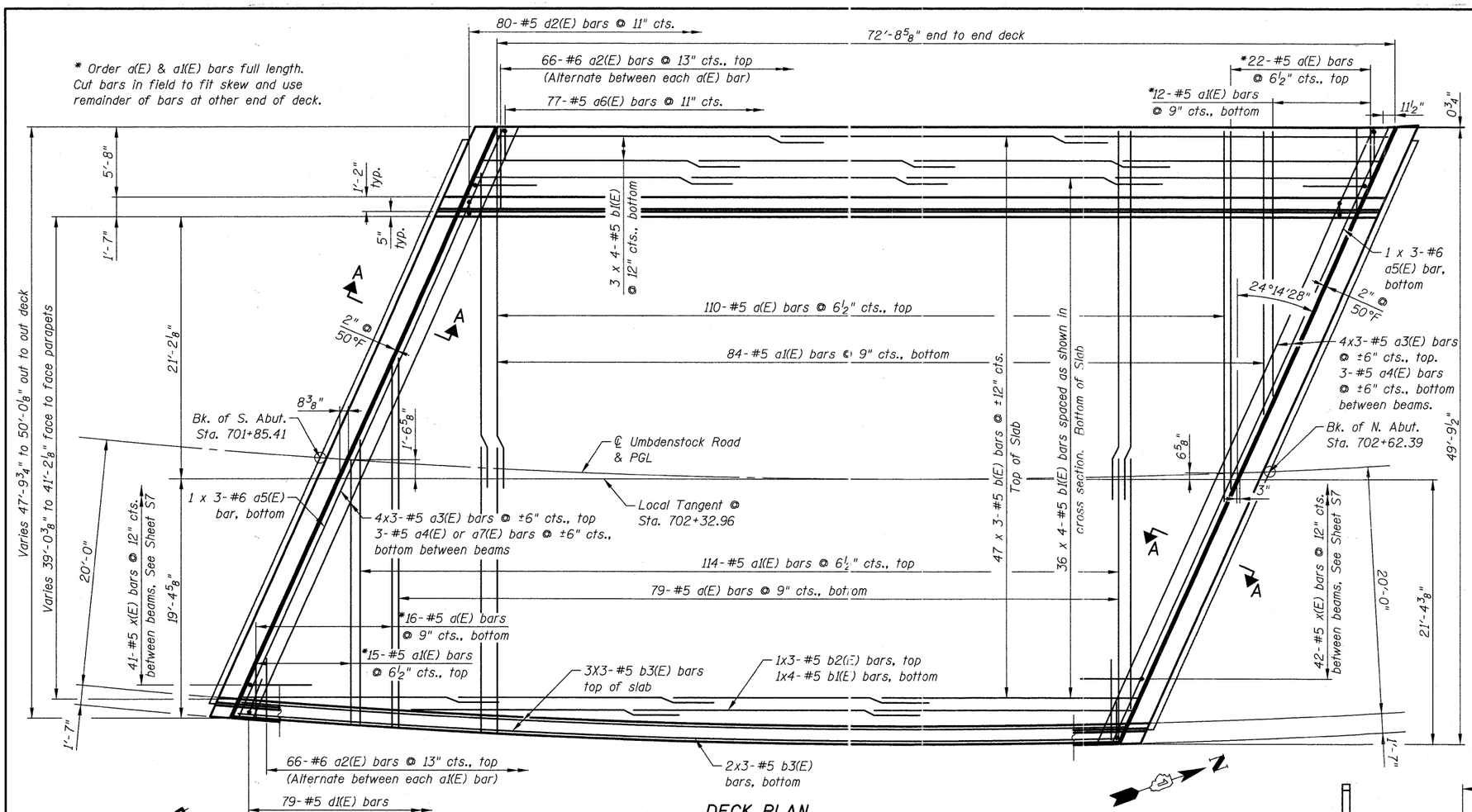

DECK PLAN

Notes:

1. See Sheet S7 for superstructure details and Bill of Materials, Bar Diagrams and Reinforcement Schedule
2. Bars indicated thus 12 x 2-#5 etc. indicates 12 lines of bars with 2 lengths per line.
3. See Sheet S7 for Section A-A and diaphragm details.
4. See sheet S7 for parapet elevations.

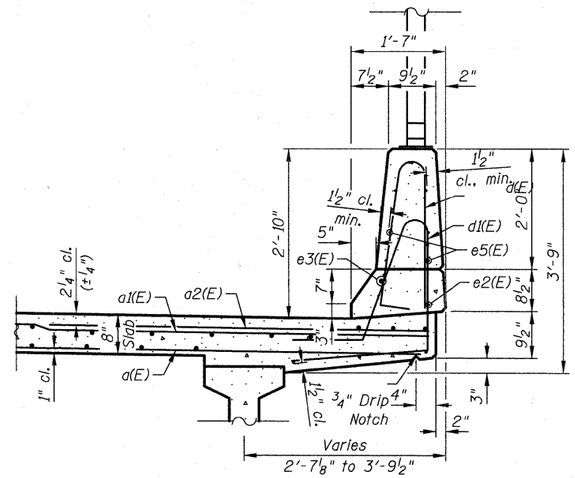

SECTION THRU EAST PARAPET

(All edges have a 3/4" chamfer)

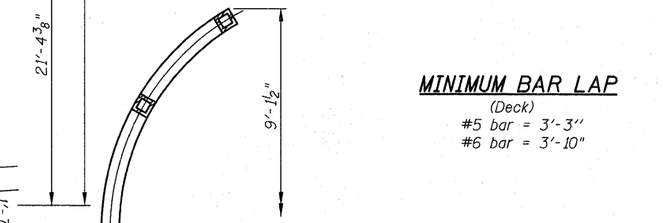

MINIMUM BAR LAP

(Deck)
#5 bar = 3'-3"
#6 bar = 3'-10"

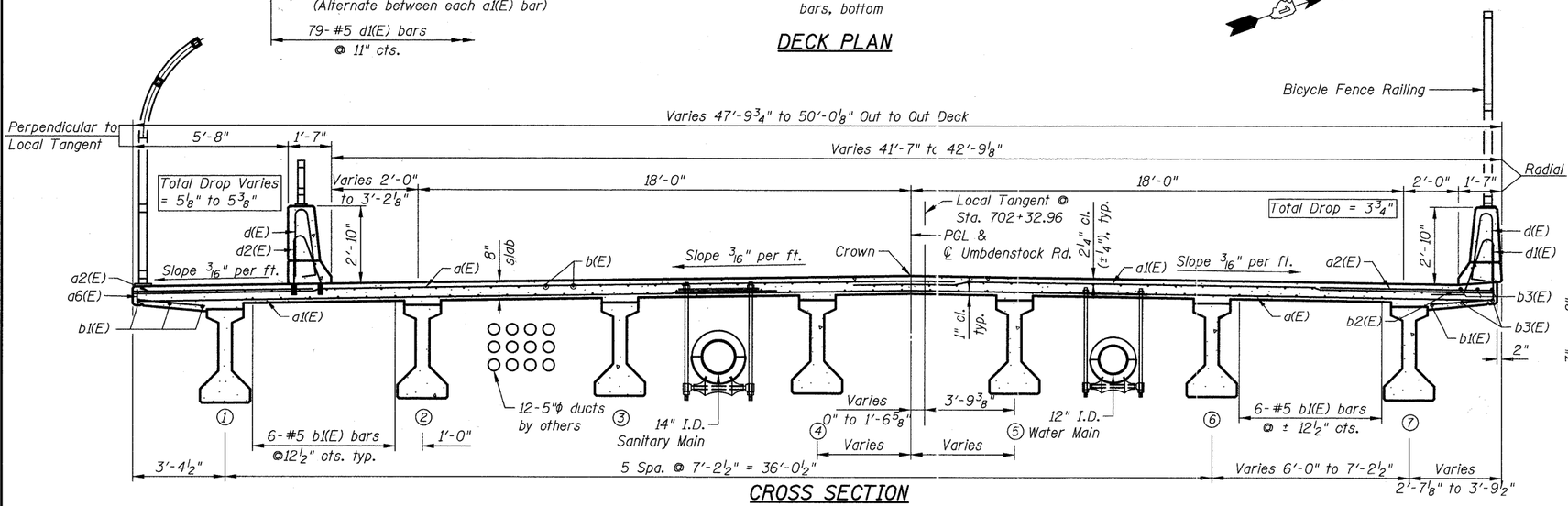

CROSS SECTION

(Looking North)

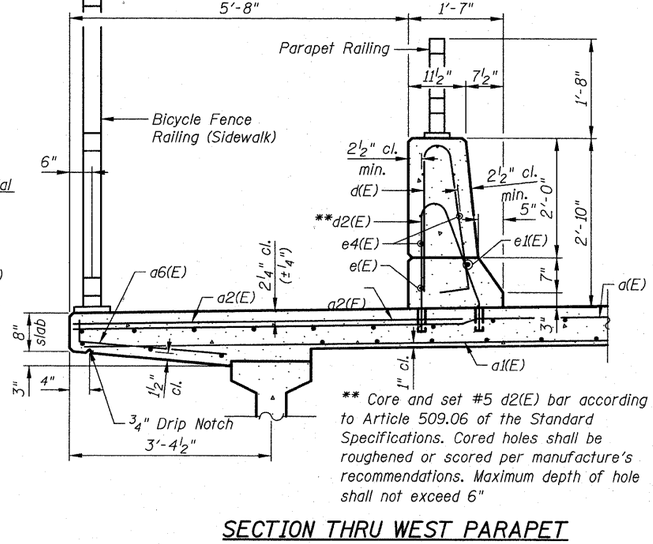

** Core and set #5 d2(E) bar according to Article 509.06 of the Standard Specifications. Cored holes shall be roughened or scored per manufacture's recommendations. Maximum depth of hole shall not exceed 6"

SECTION THRU WEST PARAPET

(All edges have a 3/4" chamfer)

CIVILTECH
450 E Devon Ave, Suite 300
Itasca, Illinois 60143
Tel: 630.773.3900 Fax: 630.773.3975
www.civiltechinc.com

DESIGNED	D. Atkins	REVISED	4-11-11
DRAWN	D. Atkins	REVISED	-
CHECKED	G. Hatiestad	REVISED	-
DATE	March 25, 2011	REVISED	-

STATE OF ILLINOIS
DEPARTMENT OF TRANSPORTATION

SUPERSTRUCTURE
UMBDENSTOCK ROAD OVER CC&P RR
STRUCTURE NO. 045-3162
SHEET NO. S6 OF S28 SHEETS

F.A.P. RTE.	SECTION	COUNTY	TOTAL SHEETS	SHEET NO.
361	06-00214-27-BR	KANE	87	39
		CONTRACT NO. 63595		
FED. ROAD DISTRICT 1	ILLINOIS	FED. AID PROJECT		

mfl 4/7/2011 3:20:38 PM J:\2372\cad\struct\06-Superstructure.dgn

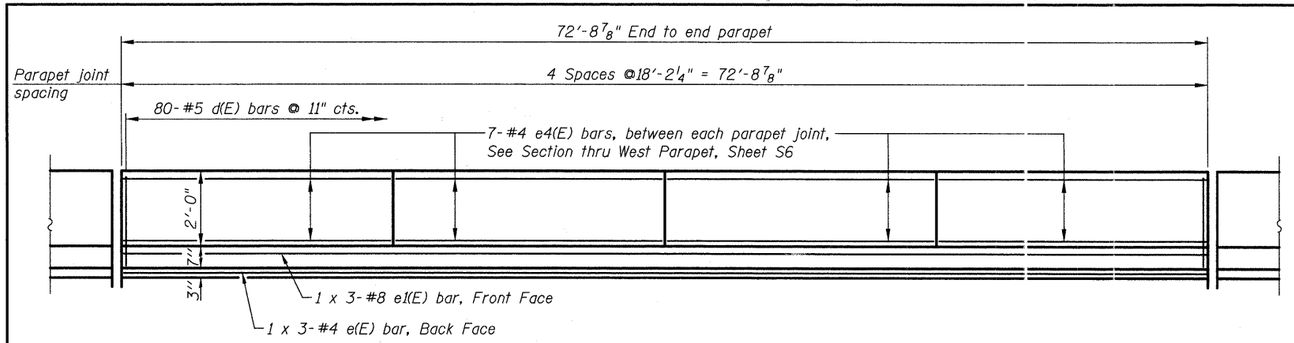

INSIDE ELEVATION OF WEST PARAPET

(Looking West)

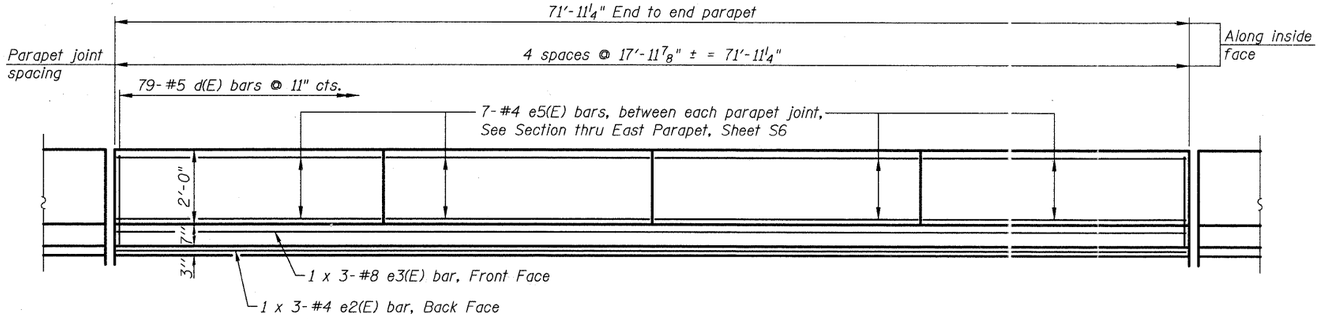

INSIDE ELEVATION OF EAST PARAPET

(Looking East)

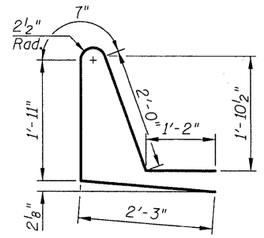

BAR d1(E)

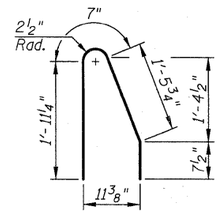

BAR d2(E)

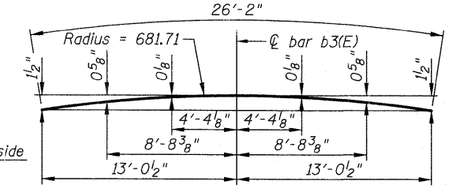

BAR b3(E)

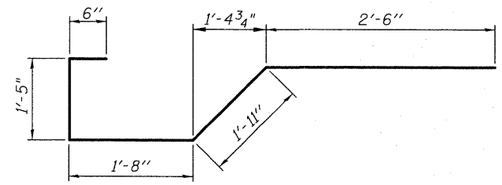

BAR x(E)

SUPERSTRUCTURE BILL OF MATERIAL

Bar	No.	Size	Length	Shape
d(E)	227	#5	30'-0"	
d_1(E)	225	#5	22'-11"	
d_2(E)	132	#6	6'-6"	
d_3(E)	24	#5	20'-4"	
d_4(E)	33	#5	7'-0"	
d_5(E)	6	#6	18'-3"	
d_6(E)	77	#5	2'-9"	
d_7(E)	3	#5	5'-9"	
b(E)	141	#5	26'-4"	
b_1(E)	160	#5	20'-7"	
b_2(E)	3	#5	21'-8"	
b_3(E)	15	#5	26'-2"	
d(E)	159	#5	5'-7"	
d_1(E)	79	#5	7'-11"	
d_2(E)	80	#5	4'-8"	
e(E)	3	#4	25'-6"	
e_1(E)	3	#8	27'-8"	
e_2(E)	3	#4	25'-4"	
e_3(E)	3	#8	27'-5"	
e_4(E)	28	#4	17'-11"	
e_5(E)	28	#4	17'-9"	
x(E)	83	#5	8'-0"	
Reinforcement Bars, Epoxy Coated		Pound	26,580	
Concrete Superstructure		Cu. Yds.	114.2	
Bridge Deck Grooving		Sq. Yds.	307	
Protective Coat		Sq. Yds.	442	

Bars indicated thus 1 x 3-#8 etc. indicates 1 line of bars with 3 lengths per line.

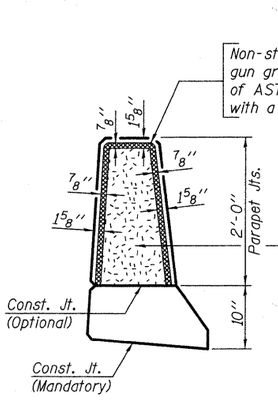

PARAPET JOINT DETAILS

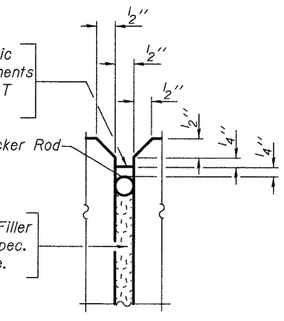

MINIMUM BAR LAP

(Parapet)
#4 bar = 2'-0"
#8 bar = 5'-2"

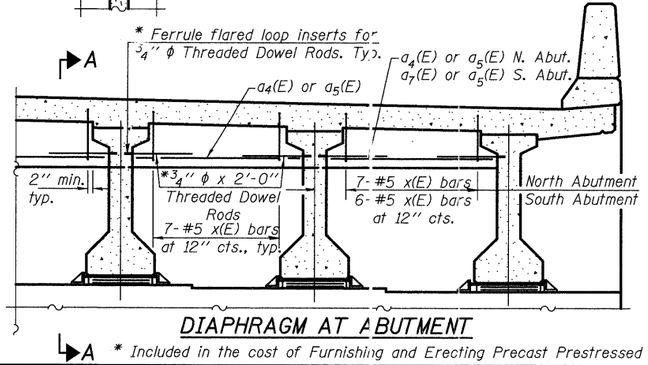

DIAPHRAGM AT ABUTMENT

Hatched area to be poured after superstructure forms have been removed. Quantity of concrete included with Concrete Superstructure. See sheets S13 thru S15.

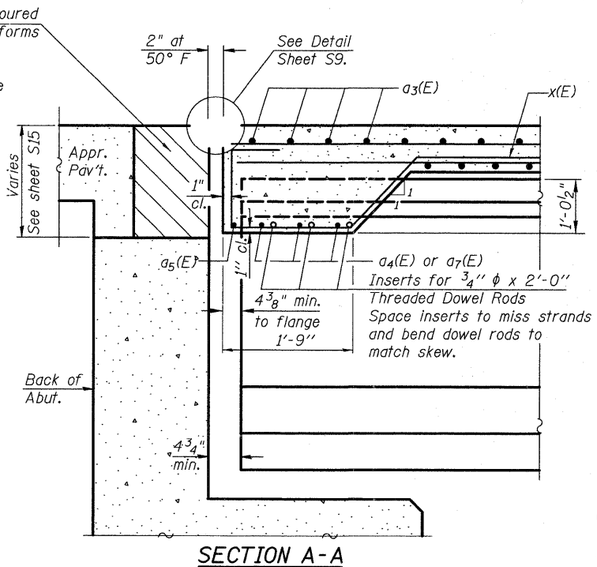

SECTION A-A AT ABUTMENT

(at Rt. Ls)

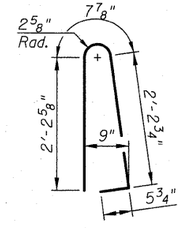

BAR d(E)

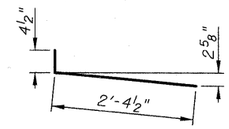

BAR d6(E)

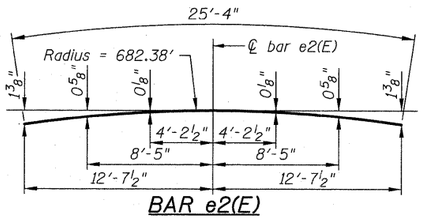

BAR e2(E)

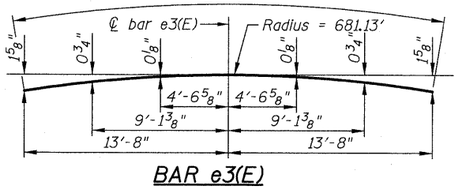

BAR e3(E)

Notes:
The x(E) bars shall be placed parallel to the beams. Spacing for these bars shall be at right angles to the beams.

* Included in the cost of Furnishing and Erecting Precast Prestressed Concrete I-beams, 42"

CIVILTECH
450 E Devon Ave, Suite 300
Itasca, Illinois 60143
Tel: 630.773.3900 Fax: 630.773.3975
www.civiltechinc.com

DESIGNED - D. Atkins	REVISED -	
DRAWN - D. Atkins	REVISED -	
CHECKED - G. Hatlestad	REVISED -	
DATE - March 25, 2011	REVISED -	

STATE OF ILLINOIS
DEPARTMENT OF TRANSPORTATION

SUPERSTRUCTURE DETAILS
UMBDENSTOCK ROAD OVER CC&P RR
STRUCTURE NO. 045-3162
SHEET NO. S7 OF S28 SHEETS

F.A.P. RTE.	SECTION	COUNTY	TOTAL SHEETS	SHEET NO.
361	06-00214-27-BR	KANE	87	40
		CONTRACT NO. 63595		
FED. ROAD DISTRICT 1	ILLINOIS	FED. AID PROJECT		

m:\1 3/24/2011 4:16:32 PM J:\2372\cad\struct\07-Superstructure Details.dgn

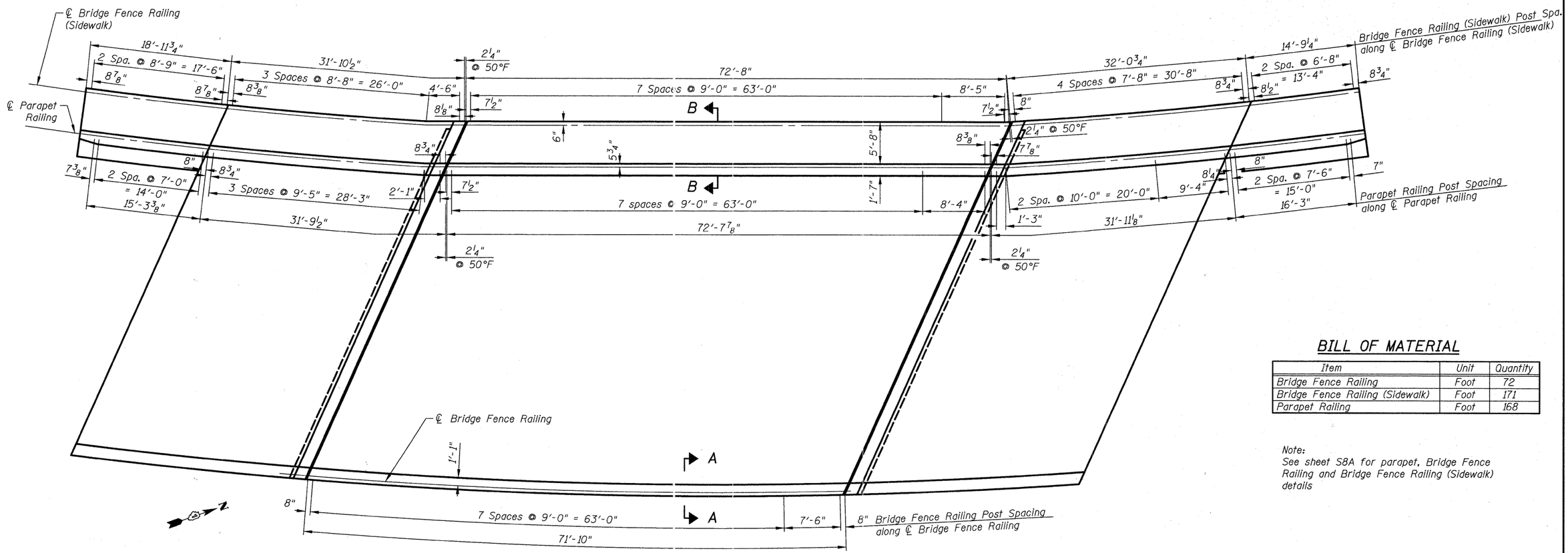

PLAN - PARAPET AND BRIDGE FENCE RAILING POST SPACING

BILL OF MATERIAL

Item	Unit	Quantity
Bridge Fence Railing	Foot	72
Bridge Fence Railing (Sidewalk)	Foot	171
Parapet Railing	Foot	168

Note:
See sheet S8A for parapet, Bridge Fence Railing and Bridge Fence Railing (Sidewalk) details

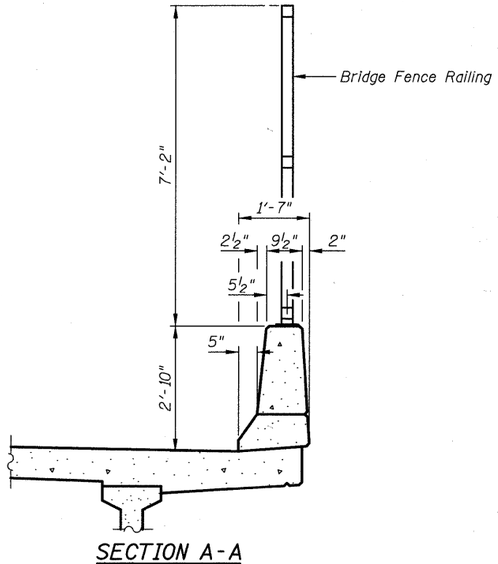

SECTION A-A

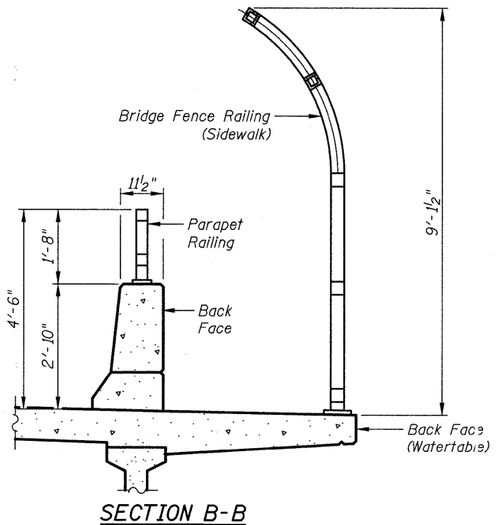

SECTION B-B

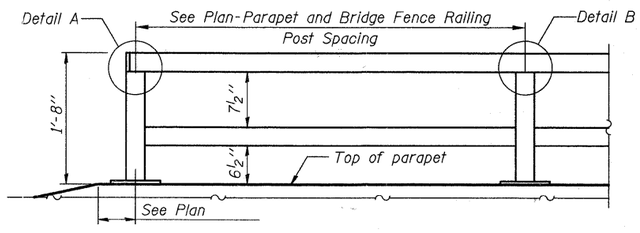

PARAPET RAILING -ELEVATION

(Inside Face of Rail)

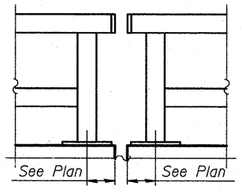

PARAPET RAILING ELEVATION AT EXPANSION JOINT

CIVILTECH
450 E Devon Ave, Suite 300
Itasca, Illinois 60143
Tel: 630.773.3900 Fax: 630.773.3975
www.civiltechinc.com

DESIGNED	D. Atkins	REVISED	4-11-11
DRAWN	D. Atkins	REVISED	-
CHECKED	G. Hatlestad	REVISED	-
DATE	March 25, 2011	REVISED	-

STATE OF ILLINOIS
DEPARTMENT OF TRANSPORTATION

RAILING POST SPACING
UMBDENSTOCK ROAD OVER CC&P RR
STRUCTURE NO. 045-3162
SHEET NO. S8 OF S28 SHEETS

F.A.P. RTE.	SECTION	COUNTY	TOTAL SHEETS	SHEET NO.
361	06-00214-27-BR	KANE	87	41
		CONTRACT NO. 63595		
FED. ROAD DISTRICT 1	ILLINOIS	FED. AID PROJECT		

J:\12372\cad\structure\08_Railing Post Spacing.dgn
3:20:39 PM
4/7/2011

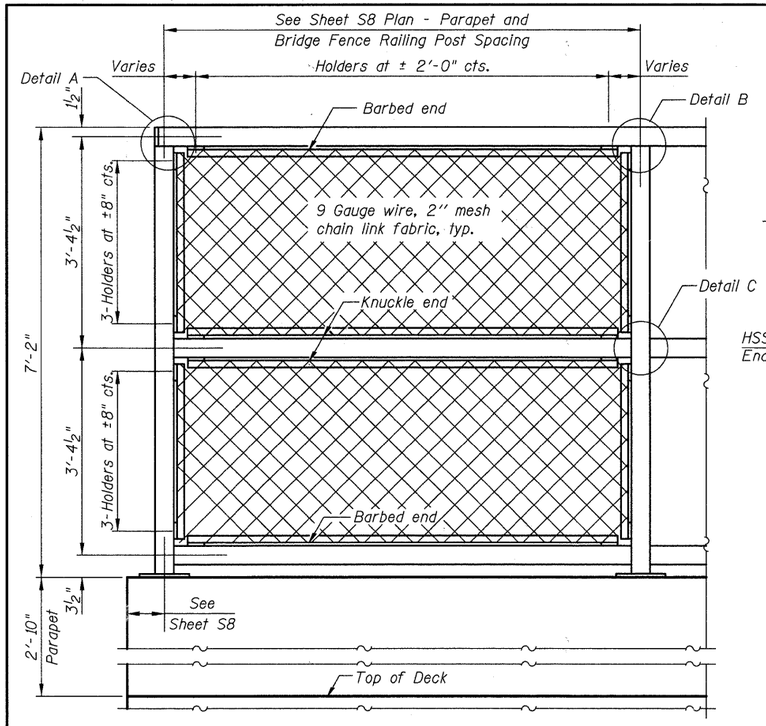

BRIDGE FENCE RAILING -ELEVATION

(Inside Face)

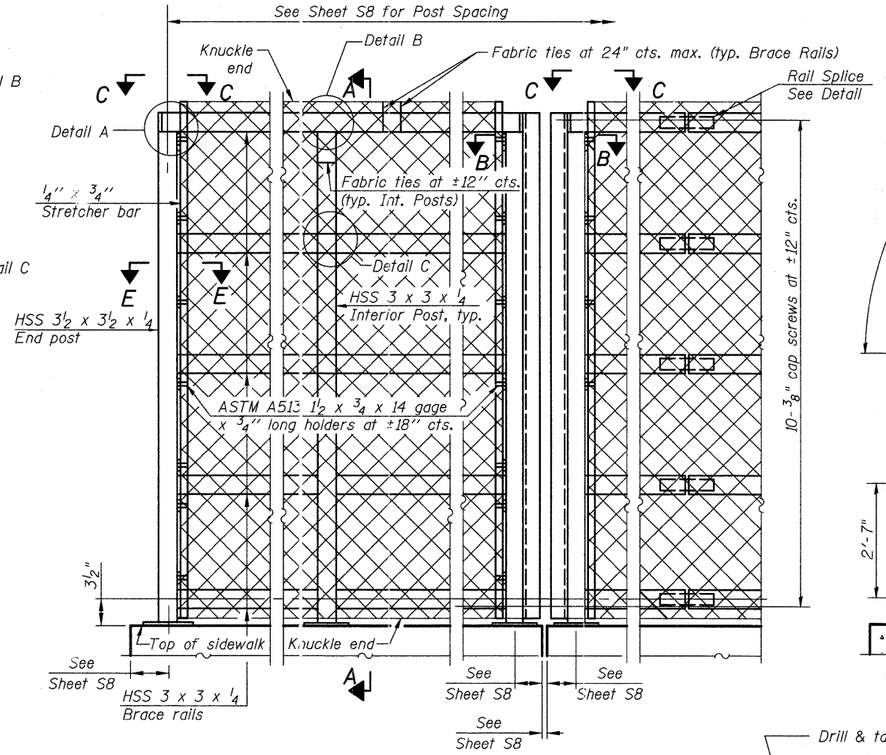

BRIDGE FENCE RAILING (SIDEWALK) -ELEVATION

(Inside Face)

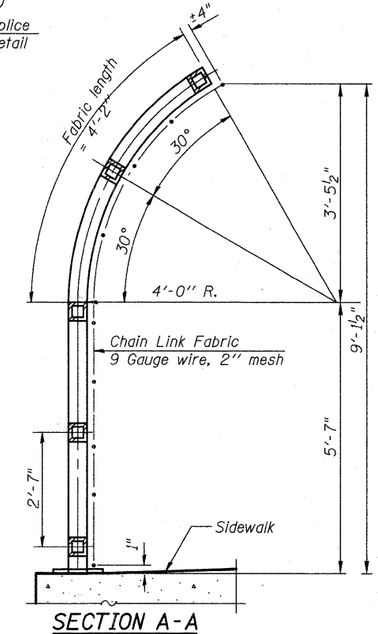

SECTION A-A

All steel rail elements shall be galvanized according to Article 509.05 of the Standard Specifications.

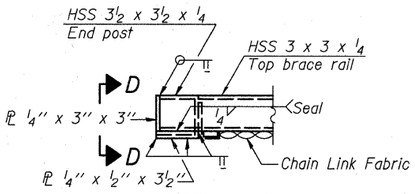

VIEW C-C

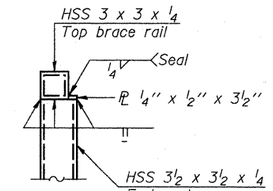

VIEW D-D

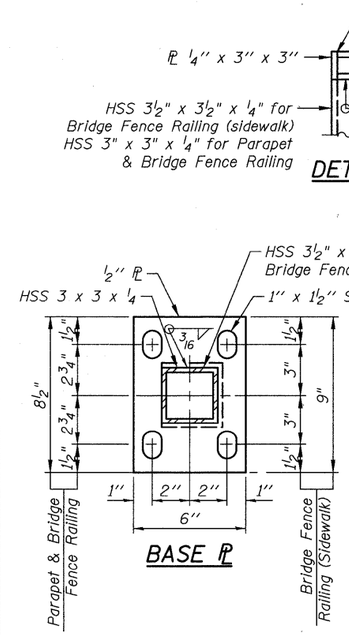

BASE ℄

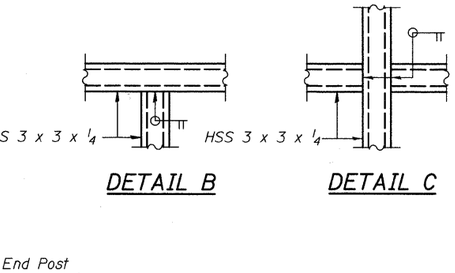

RAIL SPLICE

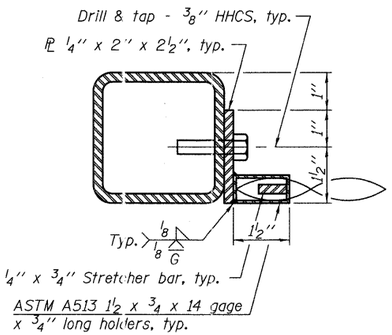

SECTION E-E

In lieu of the cast-in-place anchor device shown, the Contractor has the option of drilling and Setting ⅝" ϕ anchor rods according to Article 509.06 of the Standard Specifications. Embedment shall be according to the Manufacturer's specifications.

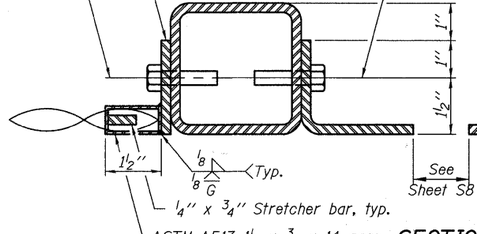

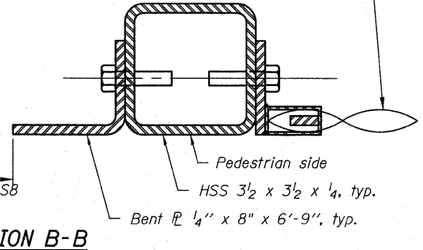

SECTION B-B

(At Expansion Joint)

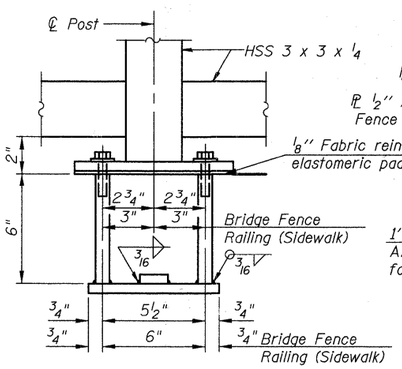

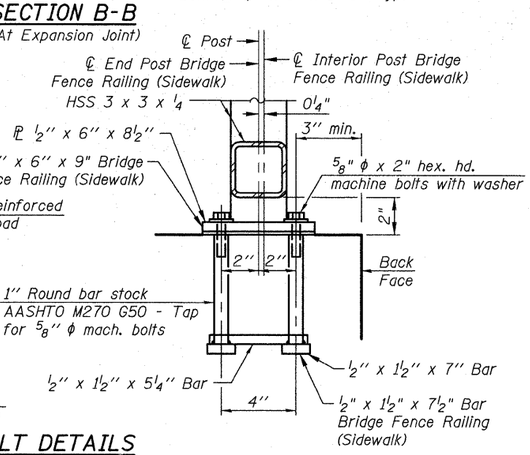

ANCHOR BOLT DETAILS

DETAIL A

DETAIL B

DETAIL C

CIVILTECH
450 E Devon Ave, Suite 300
Itasca, Illinois 60143
Tel: 630.773.3900 Fax: 630.773.3975
www.civiltechinc.com

DESIGNED	D. Atkins	REVISED	4-11-11
DRAWN	D. Atkins	REVISED	-
CHECKED	G. Hatlestad	REVISED	-
DATE	March 25, 2011	REVISED	-

STATE OF ILLINOIS
DEPARTMENT OF TRANSPORTATION

RAILING DETAILS
UMBDENSTOCK ROAD OVER CC&P RR
STRUCTURE NO. 045-3162
SHEET NO. S8A OF S28 SHEETS

F.A.P. RTE.	SECTION	COUNTY	TOTAL SHEETS	SHEET NO.
361	06-00214-27-BR	KANE	87	41A
		CONTRACT NO. 63595		
FED. ROAD DISTRICT 1	ILLINOIS	FED. AID PROJECT		

mfl 4/7/2011 3:20:40 PM J:\2372\cad\struct\08A_Railing details.dgn

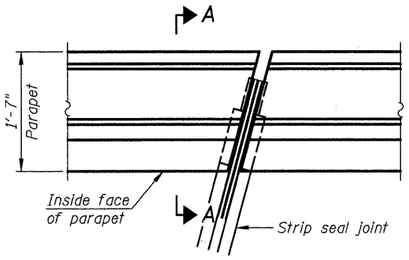

PLAN
(For skews ≤ 30°)

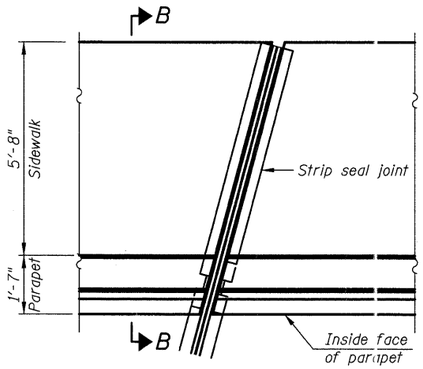

PLAN - INTERIOR DECK PARAPET
(For skews ≤ 30°)

Notes:

The strip seal shall be made continuous and shall have a minimum thickness of $\frac{1}{4}$". The configuration of the strip seal shall match the configuration of the Locking Edge Rails. Open or "webbed" strip seal gland configurations are not permitted. The gland shall be sized for a maximum rated movement of 4 inches.

The Locking Edge Rails depicted are conceptual only, except for the minimum dimensions shown. The actual configuration of the Locking Edge Rails and matching strip seal may vary from manufacturer to manufacturer. Flanged edge rails will not be allowed. Locking Edge Rails may be spliced at slope discontinuities.

The manufacturer's recommended installation methods shall be followed.

The joint opening and deck dimensions detailed on the superstructure are based on a rolled rail expansion joint. If the Contractor elects to use the welded rail expansion joint, the opening and deck dimensions shall be modified according to the dimensions detailed on this sheet. Required modifications shall be made at no additional cost to the State.

All steel components shall be galvanized after fabrication according to Article 520.03 of the Standard Specifications.

Maximum space between rail segments at stage lines shall be $\frac{3}{16}$", sealed with a suitable sealant.

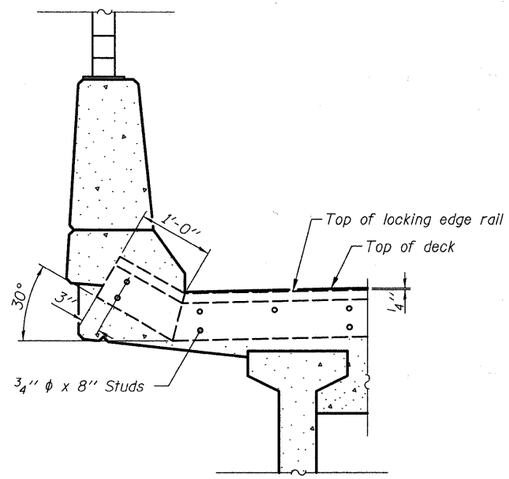

SECTION A-A

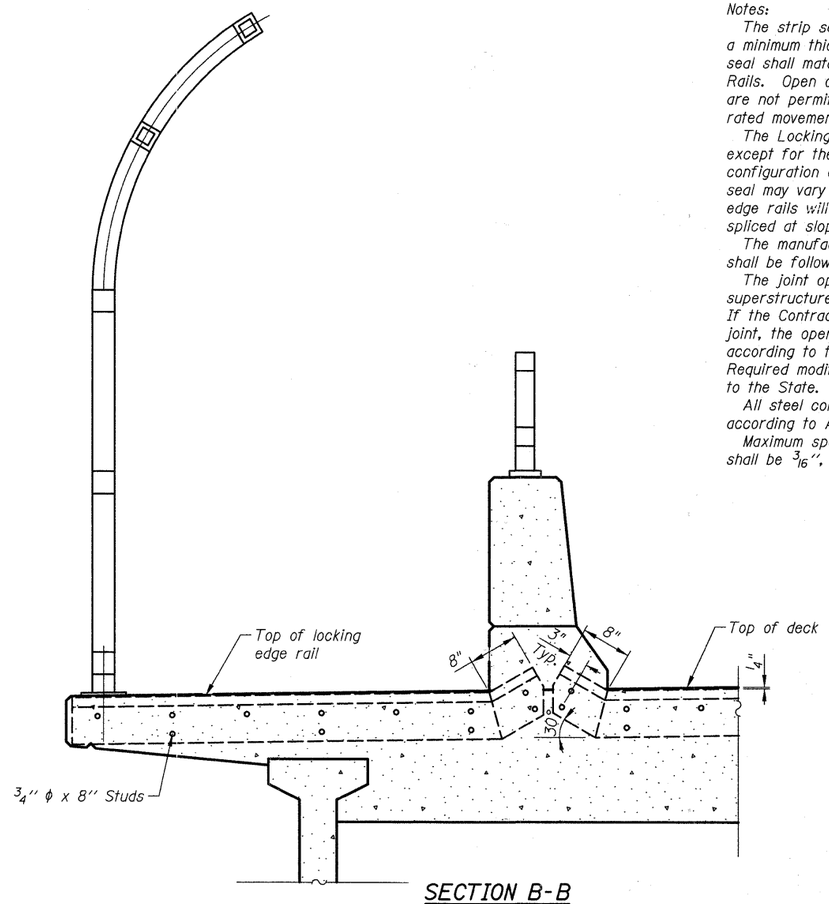

SECTION B-B

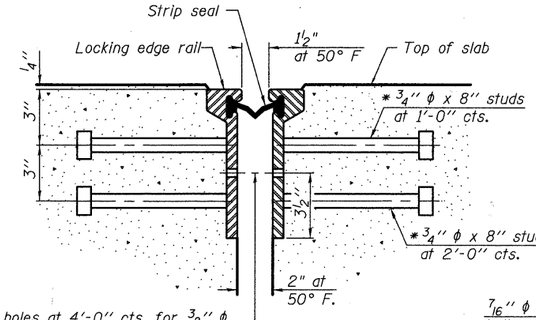

7/16" ϕ holes at 4'-0" cts. for 3/8" ϕ bolts. All bolts shall be burned, sawed, or chipped off flush with the plates after forms are removed, typ.

SECTION THRU ROLLED RAIL JOINT

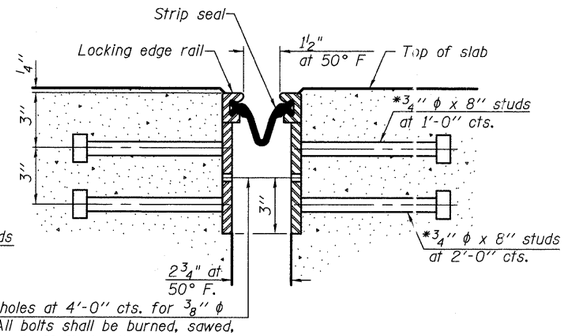

7/16" ϕ holes at 4'-0" cts. for 3/8" ϕ bolts. All bolts shall be burned, sawed, or chipped off flush with the plates after forms are removed, typ.

SECTION THRU WELDED RAIL JOINT

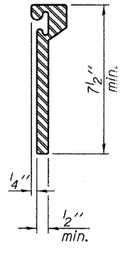

ROLLED EXTRUDED RAIL

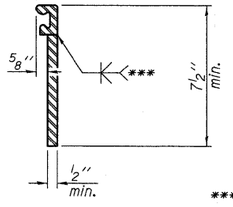

WELDED RAIL

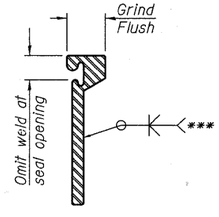

*** Back gouge not required if complete joint penetration is verified by mock-up.

LOCKING EDGE RAIL SPLICE

The inside of the locking edge rail groove shall be free of weld residue.

Rolled rail shown, welded rail similar.

LOCKING EDGE RAILS

* Granular or solid flux filled headed studs conforming to Article 1006.32 of the Std. Specs., automatically end welded.

BILL OF MATERIAL

Item	Unit	Total
Preformed Joint Strip Seal	Foot	108

CIVILTECH
450 E Devon Ave, Suite 300
Itasca, Illinois 60143
Tel: 630.773.3900 Fax: 630.773.3975
www.civiltechinc.com

DESIGNED	D. Atkins	REVISED	4-11-11
DRAWN	D. Atkins	REVISED	-
CHECKED	G. Hatlestad	REVISED	-
DATE	March 25, 2011	REVISED	-

STATE OF ILLINOIS
DEPARTMENT OF TRANSPORTATION

PREFORMED JOINT STRIP SEAL
UMBDENSTOCK ROAD OVER CC&P RR
STRUCTURE NO. 045-3162
SHEET NO. S9 OF S28 SHEETS

F.A.P. RTE.	SECTION	COUNTY	TOTAL SHEETS	SHEET NO.
361	06-00214-27-BR	KANE	87	42
		CONTRACT NO. 63595		
FED. ROAD DISTRICT 1	ILLINOIS	FED. AID PROJECT		

mfl 4/7/2011 3:20:41 PM J:\2372\cad\struct\09_Preformed Joint Strip Seal.dgn

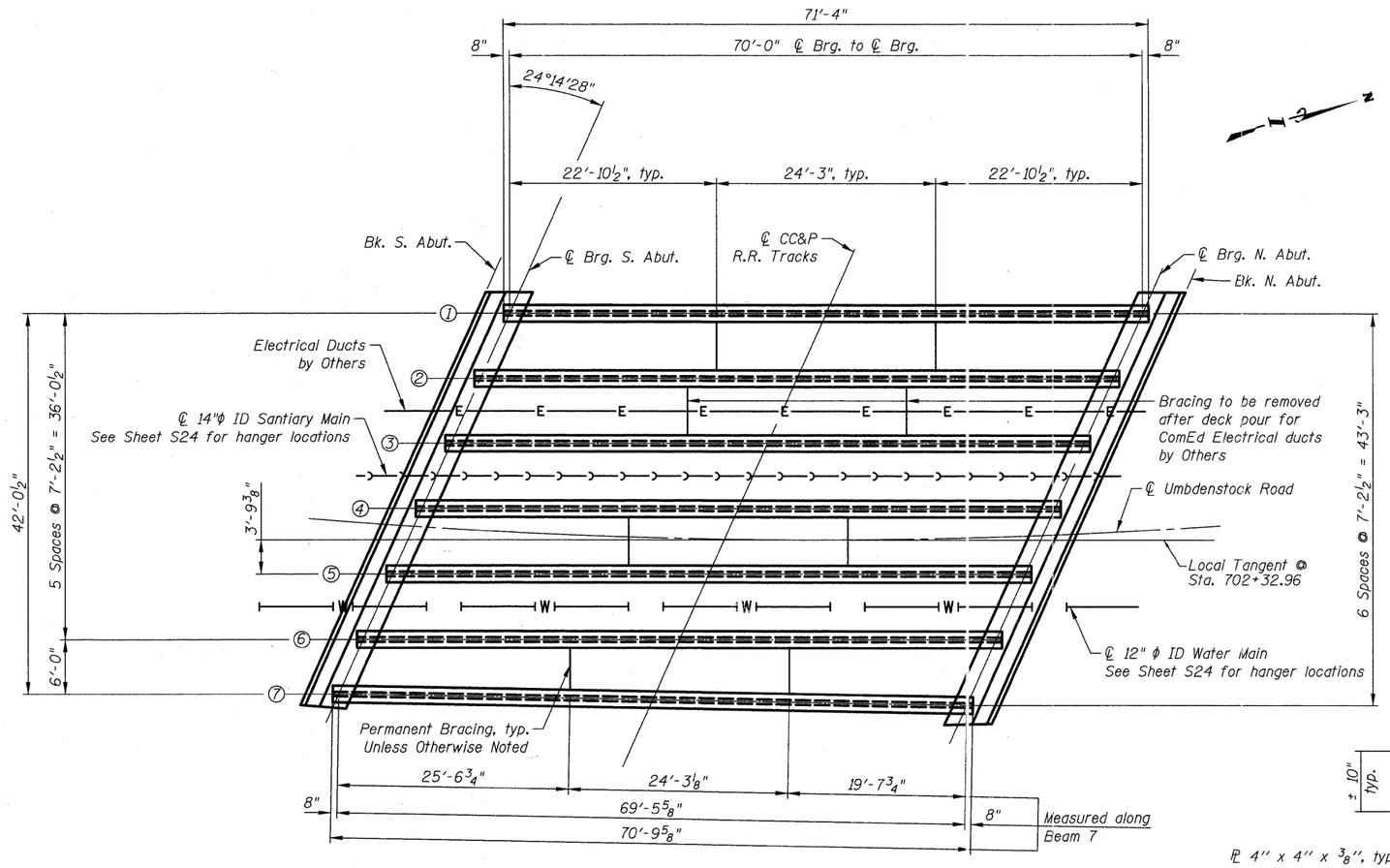

FRAMING PLAN

I: Non-composite moment of inertia of beam section ($in.^4$).
I': Composite moment of inertia of beam section ($in.^4$).
S_b: Non-composite section modulus for the bottom fiber of the prestressed beam ($in.^3$).
S_b': Composite section modulus for the bottom fiber of the prestressed beam ($in.^3$).
S_t: Non-composite section modulus for the top fiber of the prestressed beam ($in.^3$).
S_t': Composite section modulus for the top fiber of the prestressed beam ($in.^3$).
DC1: Un-factored non-composite dead load (kips/ft.).
M_{DC1}: Un-factored moment due to non-composite dead load (kip-ft.).
DC2: Un-factored long-term composite (superimposed excluding future wearing surface) dead load (kips/ft.).
M_{DC2}: Un-factored moment due to long-term composite (superimposed excluding future wearing surface) dead load (kip-ft.).
DW: Un-factored long-term composite (superimposed future wearing surface only) dead load (kips/ft.).
M_{DW}: Un-factored moment due to long-term composite (superimposed future wearing surface only) dead load (kip-ft).
M_{L+IM}: Un-factored live load moment plus dynamic load allowance (impact) (kip-ft.).

INTERIOR BEAM MOMENT TABLE		
		0.5 Span
I	(in^4)	90,956
I'	(in^4)	285,060
S_b	(in^3)	5,153
S_b'	(in^3)	8,854
S_t	(in^3)	3,736
S_t'	(in^3)	29,072
DC1	(k/')	1.24
M_{DC1}	('k)	759
DC2	(k/')	0.22
M_{DC2}	('k)	137
DW	(k/')	0.30
M_{DW}	('k)	182
M_{L+IM}	('k)	1,131

INTERIOR BEAM REACTION TABLE		
		Abut.
R_{DC1}	(k)	43.37
R_{DC2}	(k)	7.84
R_{DW}	(k)	10.38
R_{L+IM}	(k)	87.11
R_{Total}	(k)	148.70

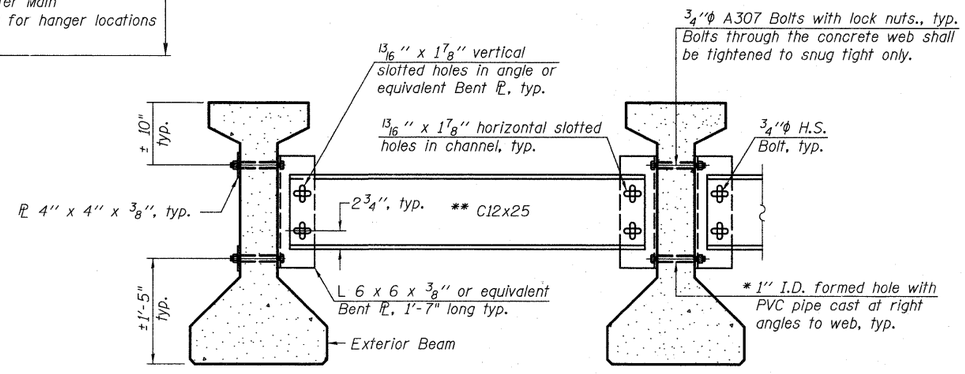

Notes:
All material for bracing shall be hot dip galvanized according to AASHTO M111 unless otherwise noted.
Two hardened washers are required for each set of oversized holes.
All holes shall be 15/16"ϕ unless otherwise noted.
5/16" x 3" x 3" plate washers are required over all slotted holes.
All bolts shall be galvanized according to AASHTO M232.
Bracing shall be installed as beams are erected and tightened as soon as possible during erection.
Permanent bracing shall not be paid for separately, but shall be included in the cost of Furnishing and Erecting Precast Prestressed Concrete I-Beams.
All structural steel shall be AASHTO M270 Grade 50

* Fabricator shall locate to miss strands within permissible tolerances.

** Alternate C12x30 channels are permitted to facilitate material acquisition.

PERMANENT BRACING DETAILS FOR 42" PPC I-BEAMS

CIVILTECH
450 E Devon Ave, Suite 300
Itasca, Illinois 60143
Tel: 630.773.3900 Fax: 630.773.3975
www.civiltechinc.com

DESIGNED - D. Atkins		REVISED -
DRAWN - D. Atkins		REVISED -
CHECKED - G. Hatlestad		REVISED -
DATE - March 25, 2011		REVISED -

STATE OF ILLINOIS
DEPARTMENT OF TRANSPORTATION

FRAMING PLAN
UMBDENSTOCK ROAD OVER CC&P RR
STRUCTURE NO. 045-3162
SHEET NO. S10 OF S28 SHEETS

F.A.P. RTE.	SECTION	COUNTY	TOTAL SHEETS	SHEET NO.
361	06-00214-27-BR	KANE	87	43
		CONTRACT NO. 63595		
FED. ROAD DISTRICT 1	ILLINOIS	FED. AID PROJECT		

m:\...\d\struct\0_Framing Plan.dgn
3/24/2011 4:16:35 PM

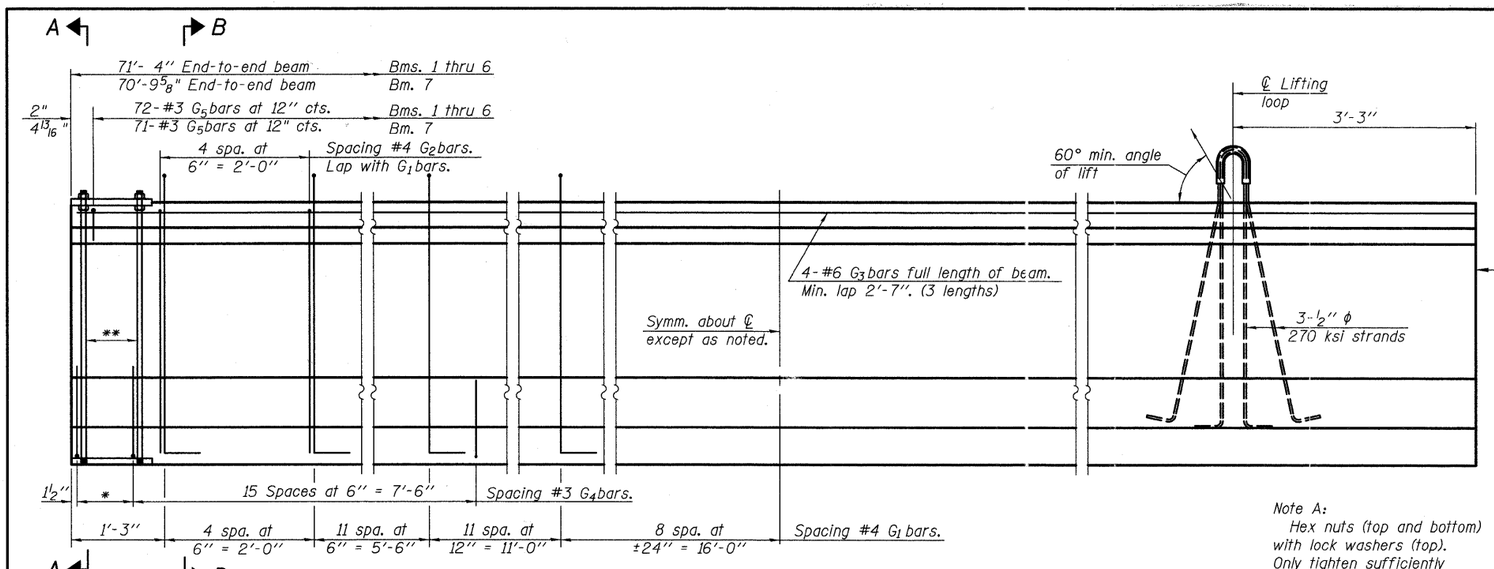

ELEVATION OF BEAM

(Showing reinforcement & dimensions)

*3 spaces at 3" = 9".
**4-3/4" ϕ threaded dowel rods at 3" cts., Each Face.

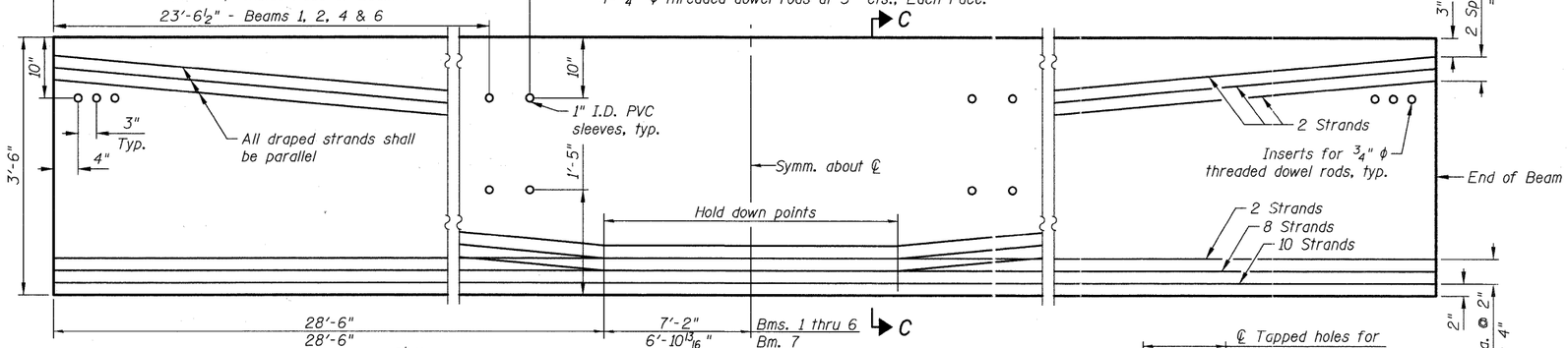

ELEVATION OF BEAM

(Showing prestressing steel)

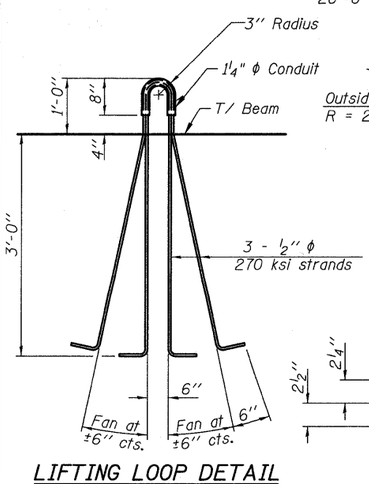

LIFTING LOOP DETAIL

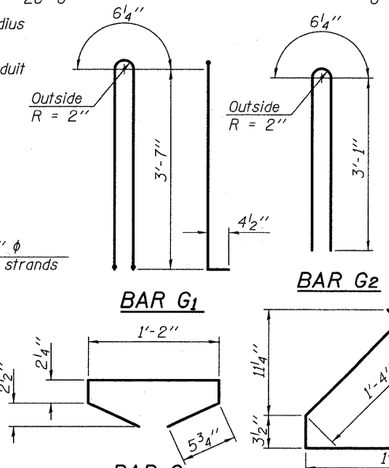

BAR G1 — BAR G2

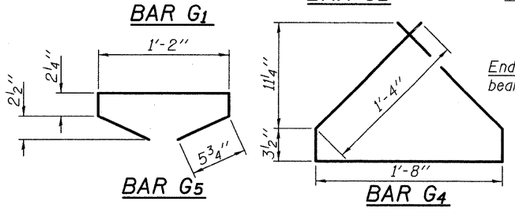

BAR G5 — BAR G4

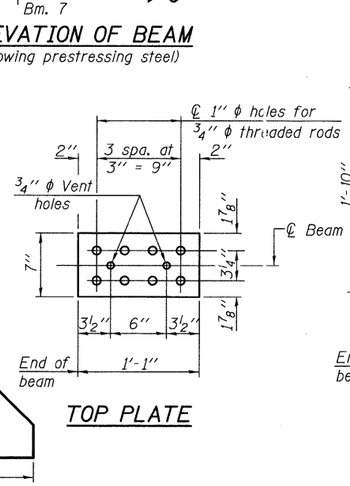

TOP PLATE

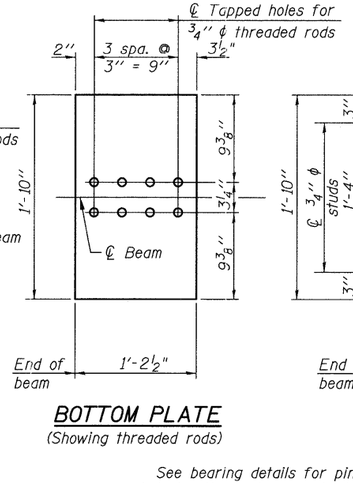

BOTTOM PLATE

(Showing threaded rods)

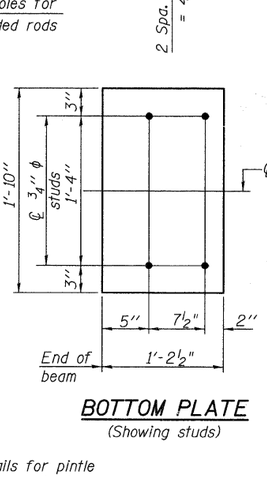

BOTTOM PLATE

(Showing studs)

See bearing details for pintle hole locations when required.

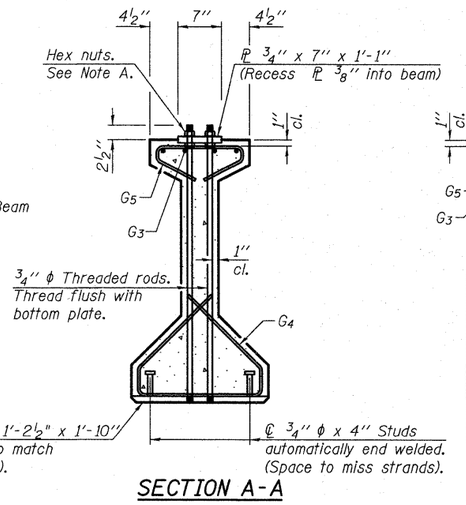

SECTION A-A

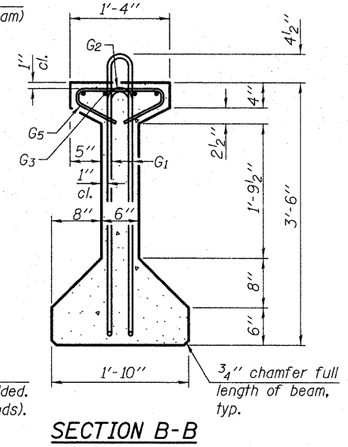

SECTION B-B

Note A:
Hex nuts (top and bottom) with lock washers (top). Only tighten sufficiently to compress lock washers.

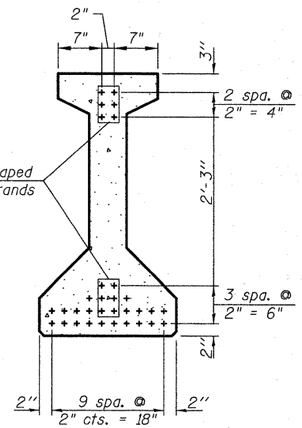

SECTION C-C

***BAR LIST BEAMS 1 THRU 6 ONE BEAM ONLY

Bar	No.	Size	Length	Shape
G_1	69	#4	8'-5"	⊓L
G_2	10	#4	6'-8"	⊓
G_3	12	#6	25'-5"	—
G_4	38	#3	4'-11"	⊔
G_5	72	#3	2'-6"	⊔

***For information only

***BAR LIST BEAM 7

Bar	No.	Size	Length	Shape
G_1	69	#4	8'-5"	⊓L
G_2	10	#4	6'-8"	⊓
G_3	12	#6	25'-5"	—
G_4	38	#3	4'-11"	⊔
G_5	71	#3	2'-6"	⊔

***For information only

BILL OF MATERIAL

Item	Unit	Total
Furnishing and Erecting Precast Prestressed Concrete I-Beams, 42"	Ft.	499

NOTES

Inserts for 3/4" ϕ threaded dowel rods, when specified, are to be two strut, ferrule type for interior beams and single ferrule, flared loop type for exterior beams.

Prestressing steel shall be uncoated high strength, low relaxation 7-wire strand, Grade 270. The nominal diameter shall be 1/2" and the nominal cross-sectional area shall be 0.153 sq. in.

Reinforcement bars shall conform to ASTM A 706, Grade 60. (See Special Provisions).

A minimum 2 1/2" ϕ lifting pin shall be used to engage the lifting loops during handling.

The top and bottom plates shall be AASHTO M270 Grade 50.

The bottom plates and studs shall be galvanized according to AASHTO M111. Top plates and threaded rods need not be galvanized.

Threaded rods shall be ASTM F 1554 Grade 55.

Required release strength, f'ci, shall be 6,000 psi.

CIVILTECH
450 E Devon Ave, Suite 300
Itasca, Illinois 60143
Tel: 630.773.3900 Fax: 630.773.3975
www.civiltechinc.com

DESIGNED - D. Atkins		REVISED -
DRAWN - D. Atkins		REVISED -
CHECKED - G. Hatlestad		REVISED -
DATE - March 25, 2011		REVISED -

STATE OF ILLINOIS
DEPARTMENT OF TRANSPORTATION

42" PPC I-BEAM DETAILS
UMBDENSTOCK ROAD OVER CC&P RR
STRUCTURE NO. 045-3162
SHEET NO. S11 OF S28 SHEETS

F.A.P. RTE.	SECTION	COUNTY	TOTAL SHEETS	SHEET NO.
361	06-00214-27-BR	KANE	87	44
		CONTRACT NO. 63595		
FED. ROAD DISTRICT 1	ILLINOIS	FED. AID PROJECT		

J:\2372\cad\structure\I-42 PPC I-Beam.dgn
4:16:36 PM
3/24/2011
mf

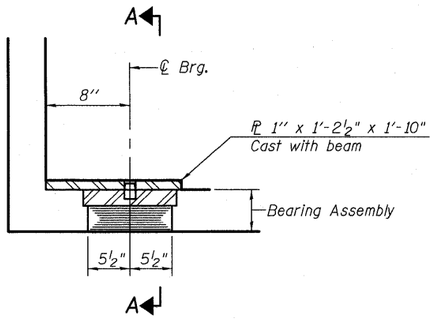

SECTION AT N. ABUT.

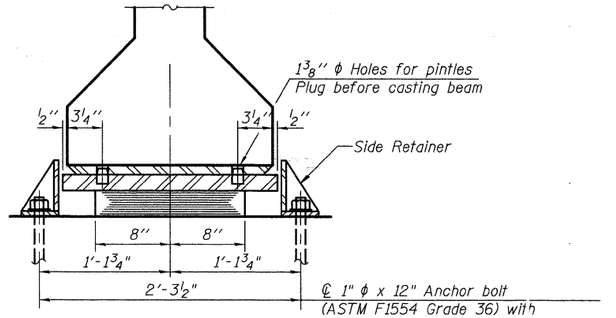

SECTION A-B

TYPE I ELASTOMERIC EXP. BRG.

(7 Required)

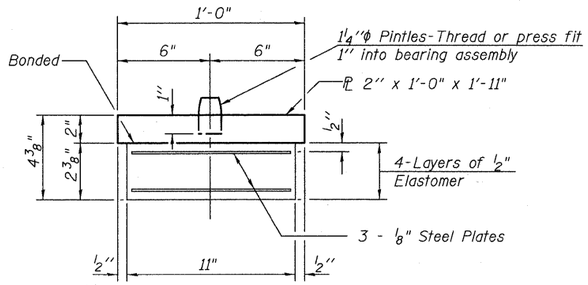

BEARING ASSEMBLY

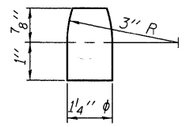

PINTLE

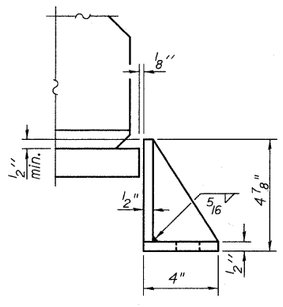

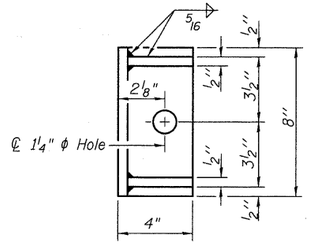

SIDE RETAINER

Equivalent rolled angle with stiffeners will be allowed in lieu of welded plates.

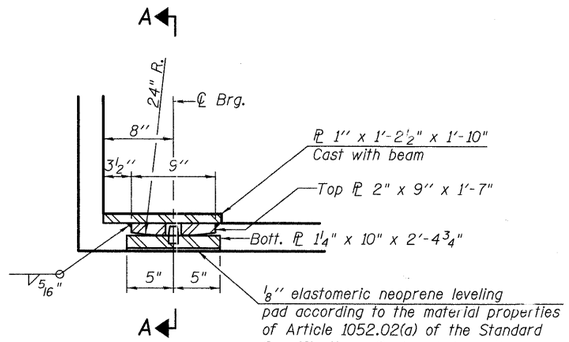

SECTION AT S. ABUT.

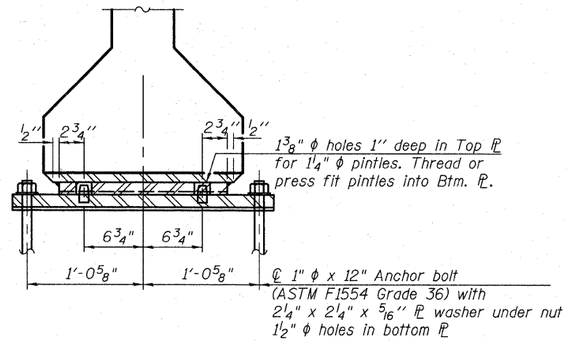

SECTION A-A

FIXED BEARING

(7 Required)

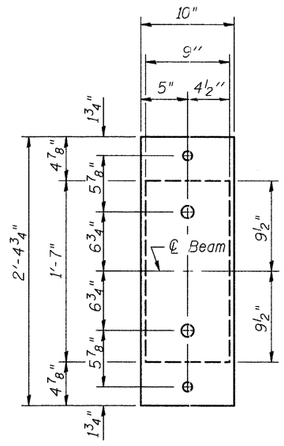

PLAN OF
TOP & BOTTOM PLATES

Notes:

Anchor bolts shall be ASTM F1554 all-thread (or an Engineer-approved alternate material) of the grade(s) and diameter(s) specified. ASTM A307 Grade C anchor bolts may be used in lieu of ASTM F1554 Grade 36 (Fy=36ksi). The corresponding specified grade of AASHTO M314 anchor bolts may be used in lieu of ASTM F1554.

Anchor bolts for side retainers may be cast in place or installed in holes drilled after members are in place.

Anchor bolts at fixed bearings may be either cast in place or installed in holes drilled after the supported member is in place and prior to pouring the deck.

Drilled and set anchor bolts shall be installed according to Article 521.06 of the Standard Specifications.

Side retainers and other steel members required for the bearing assembly shall be included in the cost of Elastomeric Bearing Assembly, Type I.

See sheet S11 for additional details of plate cast with beam.

The structural steel plates of the Bearing Assembly shall conform to the requirements of AASHTO M270 Grade 50 (AASHTO M270 Grade 50W.)

All (embedded and separate) bearing plates, side retainers, anchor bolts, nuts, washers and pintles shall be galvanized according to AASHTO M111 or M232 as applicable.

H.S. bolts in bearing assembly shall be galvanized according to AASHTO M298 Class 50.

BILL OF MATERIAL

Item	Unit	Total
Elastomeric Bearing Assembly, Type I	Each	7
Steel Bearing Assembly	Each	7
Anchor Bolts, 1"	Each	28

CIVILTECH
450 E Devon Ave, Suite 300
Itasca, Illinois 60143
Tel: 630.773.3900 Fax: 630.773.3975
www.civiltechinc.com

DESIGNED - D. Atkins	REVISED -	
DRAWN - D. Atkins	REVISED -	
CHECKED - G. Hatlestad	REVISED -	
DATE - March 25, 2011	REVISED -	

STATE OF ILLINOIS
DEPARTMENT OF TRANSPORTATION

BEARING DETAILS
UMBDENSTOCK ROAD OVER CC&P RR
STRUCTURE NO. 045-3162
SHEET NO. S12 OF S28 SHEETS

F.A.P. RTE.	SECTION	COUNTY	TOTAL SHEETS	SHEET NO.
361	06-00214-27-BR	KANE	87	45
		CONTRACT NO. 63595		
FED. ROAD DISTRICT 1	ILLINOIS	FED. AID PROJECT		

J:\2372\cad\struct\12_Bearing Details.dgn
4:46:37 PM
mfl
3/24/2011

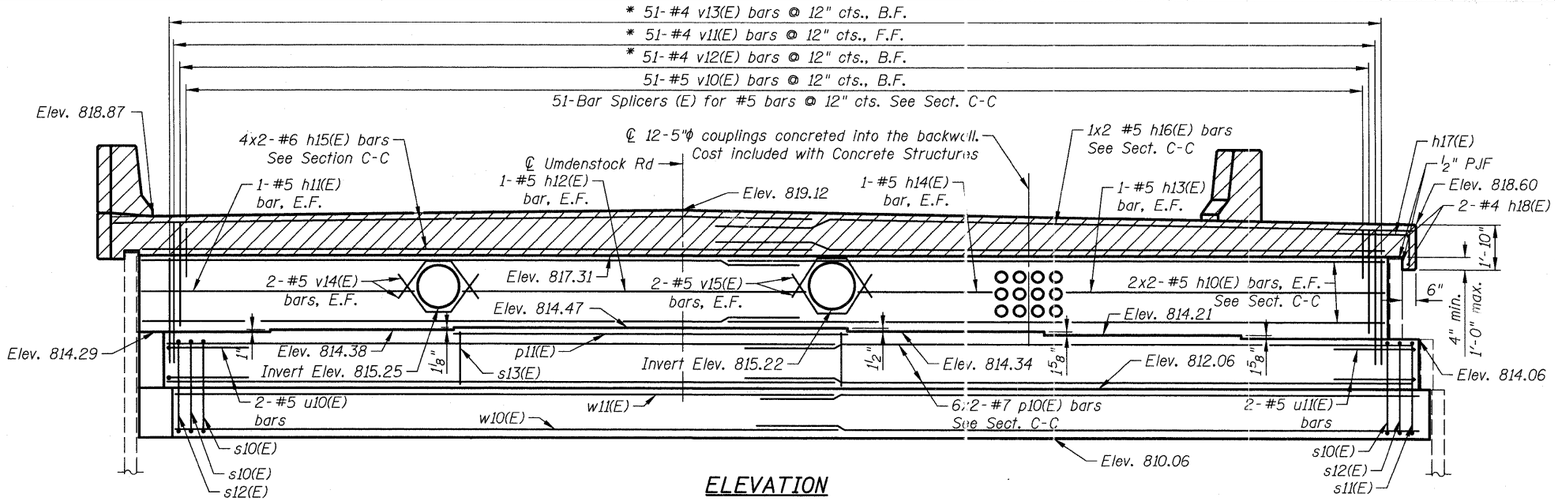

ELEVATION

* Cut bars in field to miss utility openings in backwall.

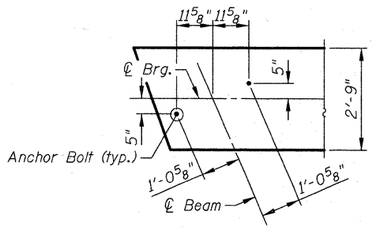

Beam 7

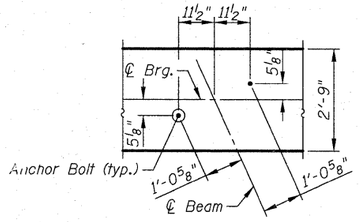

Beams 1 thru 6

ANCHOR BOLT DIAGRAMS

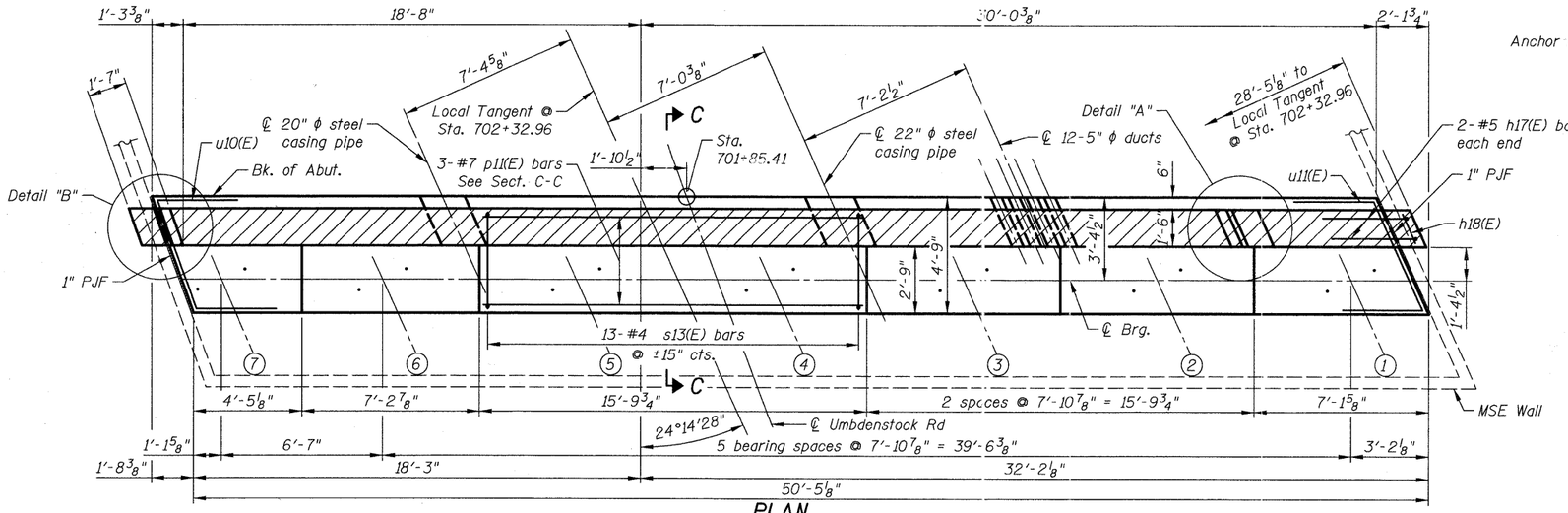

PLAN

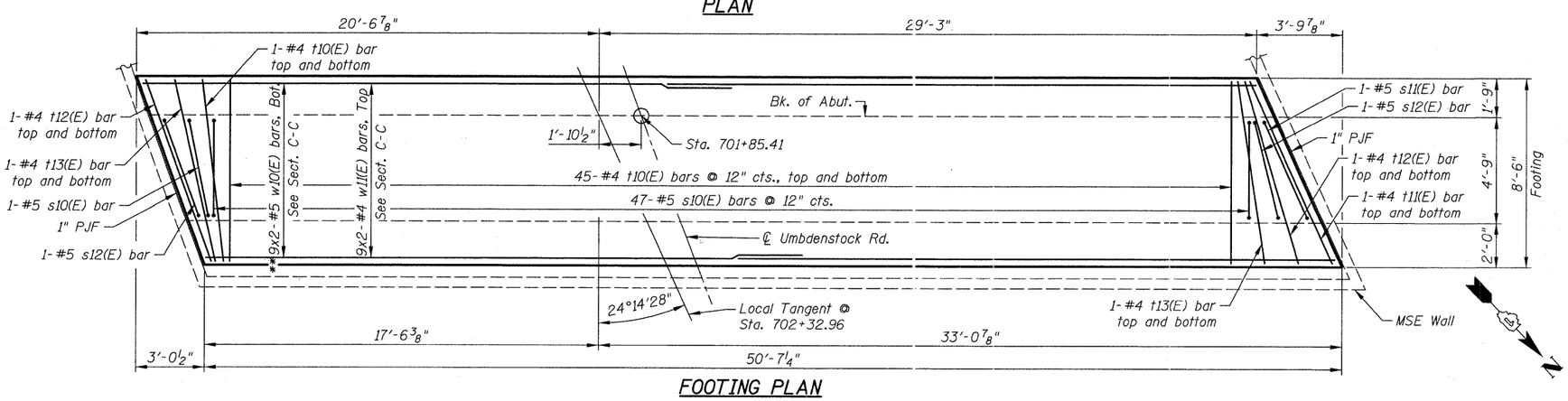

FOOTING PLAN

MINIMUM BAR LAP

#4 bar = 2'-11"
#5 bar = 3'-8"
#6 bar = 4'-5"
#7 bar = 5'-10"

**#5-w10(E) bars to have 3'-3" laps

Notes:

Hatched area to be poured after superstructure false work has been removed. Quantity of concrete included with Concrete Superstructure.

Concrete sealer shall be applied to backwalls and bridge seats.

See sheet S15 for Reinforcement Schedule, Bar Bending Diagrams, Bill of Material, Section C-C and Details "A" & "B".

Bars indicated thus 9x2-#5 etc. indicates 9 lines of bars with 2 lengths per line.

CIVILTECH
450 E Devon Ave, Suite 300
Itasca, Illinois 60143
Tel: 630.773.3900 Fax: 630.773.3975
www.civiltechinc.com

DESIGNED	D. Atkins	REVISED	-
DRAWN	D. Atkins	REVISED	-
CHECKED	G. Hatlestad	REVISED	-
DATE	March 25, 2011	REVISED	-

STATE OF ILLINOIS
DEPARTMENT OF TRANSPORTATION

SOUTH ABUTMENT
UMBDENSTOCK ROAD OVER CC&P RR
STRUCTURE NO. 045-3162
SHEET NO. S13 OF S28 SHEETS

F.A.P. RTE.	SECTION	COUNTY	TOTAL SHEETS	SHEET NO.
361	06-00214-27-BR	KANE	87	46
		CONTRACT NO. 63595		
FED. ROAD DISTRICT 1	ILLINOIS	FED. AID PROJECT		

J:\2372\cad\struct\13_South Abutment.dgn
4:16:39 PM
3/24/2011

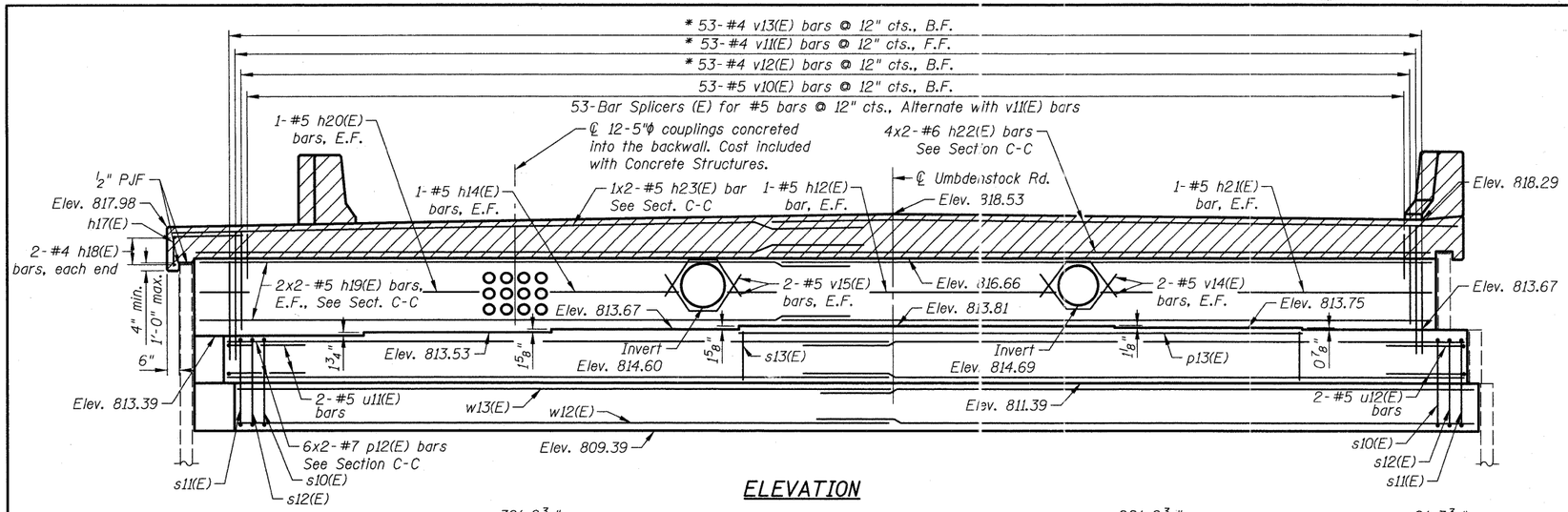

ELEVATION

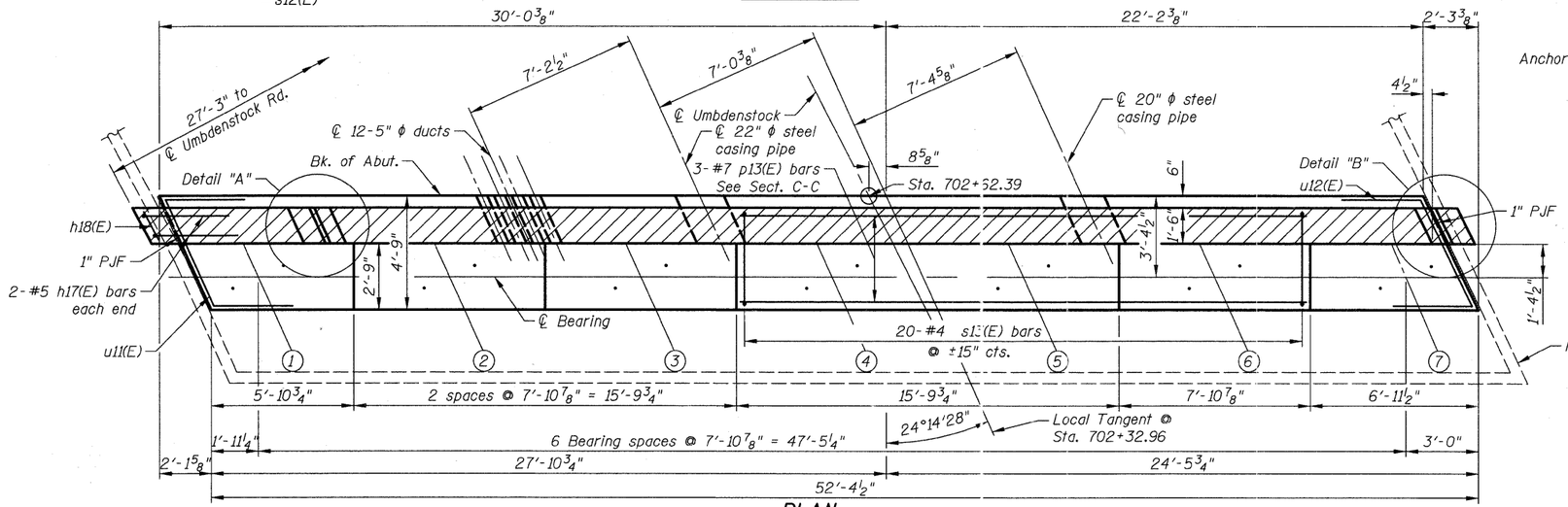

PLAN

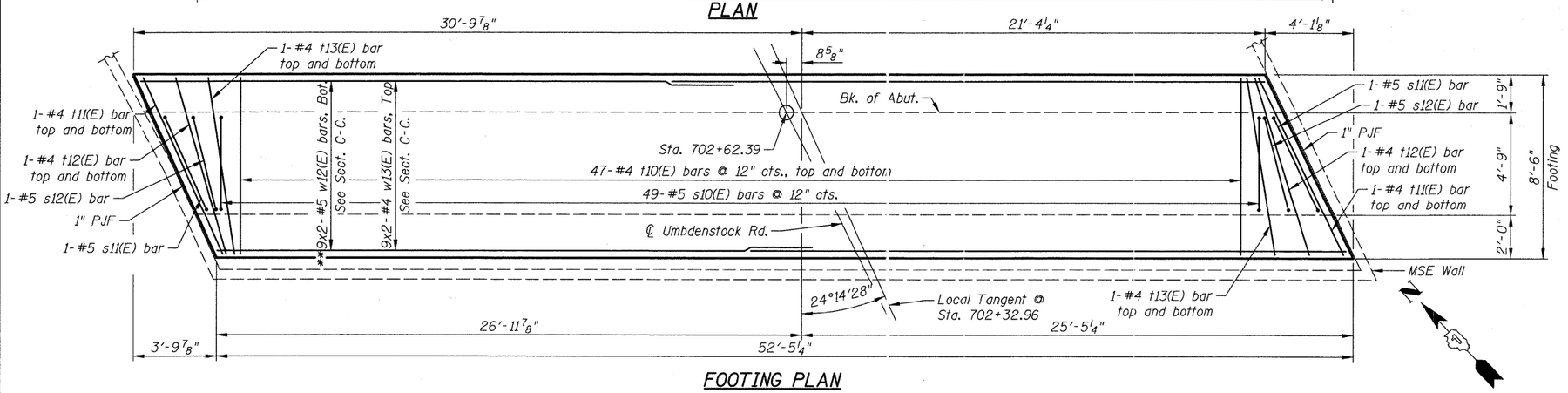

FOOTING PLAN

* Cut bars in field to miss utility openings in backwall.

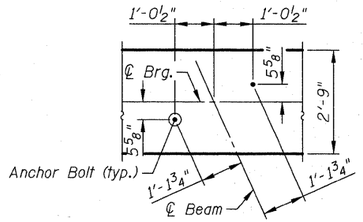

Beams 1 thru 6

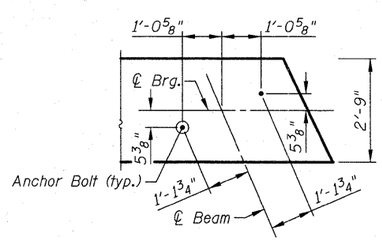

Beam 7

ANCHOR BOLT DIAGRAMS

MINIMUM BAR LAP

#4 bar = 2'-11"
#5 bar = 3'-8"
#6 bar = 4'-5"
#7 bar = 5'-10"

**#5-w12(E) bars to have 3'-3" laps

Notes:

Hatched area to be poured after superstructure false work has been removed. Quantity of concrete included with Concrete Superstructure.

Concrete sealer shall be applied to backwalls and bridge seats.

See sheet S15 for Reinforcement Schedule, Bar Bending Diagrams, Bill of Material, Section C-C and Details "A" & "B".

Bars indicated thus 9x2-#5 etc. indicates 9 lines of bars with 2 lengths per line.

CIVILTECH
450 E Devon Ave, Suite 300
Itasca, Illinois 60143
Tel: 630.773.3900 Fax: 630.773.3975
www.civiltechinc.com

DESIGNED	D. Atkins	REVISED	-
DRAWN	D. Atkins	REVISED	-
CHECKED	G. Hatlestad	REVISED	-
DATE	March 25, 2011	REVISED	-

STATE OF ILLINOIS
DEPARTMENT OF TRANSPORTATION

NORTH ABUTMENT
UMBDENSTOCK ROAD OVER CC&P RR
STRUCTURE NO. 045-3162
SHEET NO. S14 OF S28 SHEETS

F.A.P. RTE.	SECTION	COUNTY	TOTAL SHEETS	SHEET NO.
361	06-00214-27-BR	KANE	87	47
		CONTRACT NO. 63595		
FED. ROAD DISTRICT 1	ILLINOIS	FED. AID PROJECT		

J:\2372\cadd\struct\14_North Abutment.dgn
4:16:40 PM
3/24/2011
mf

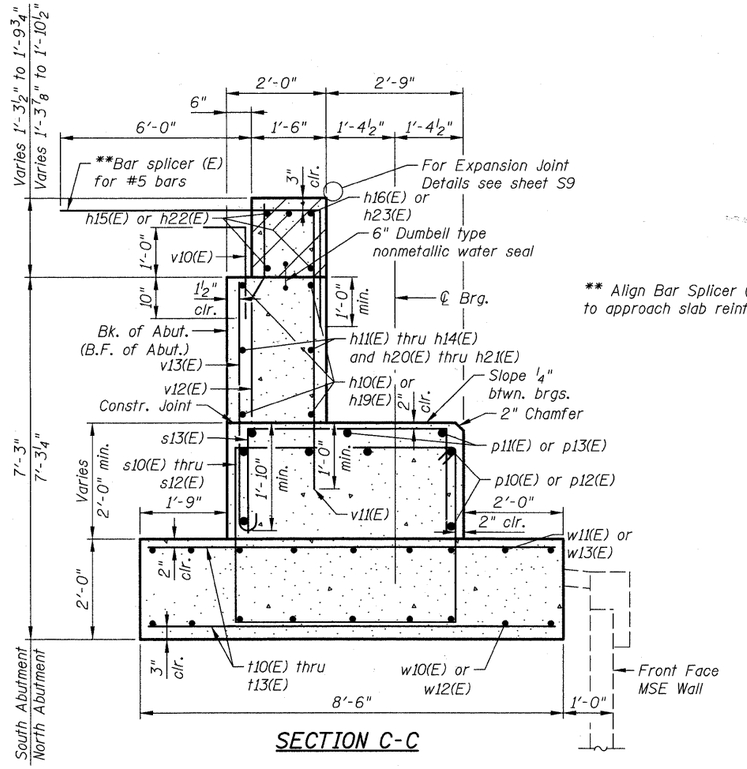

SECTION C-C

** Align Bar Splicer (E) parallel to approach slab reinforcement.

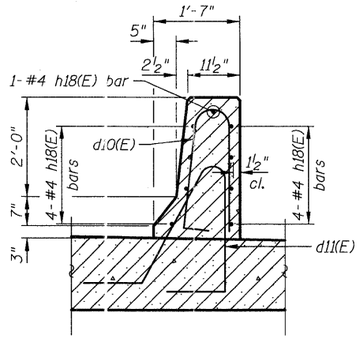

SECTION A-A

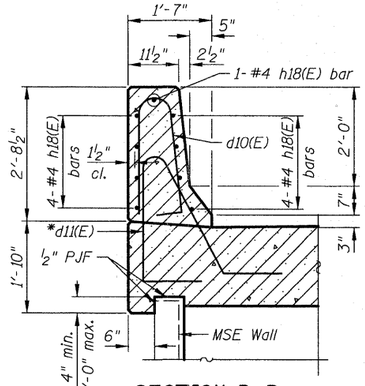

*Cut bars in field to miss MSE wall Panel

SECTION B-B

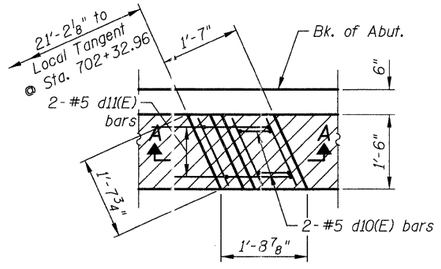

DETAIL "A"

(South Abutment shown, North Abutment is mirror image.)

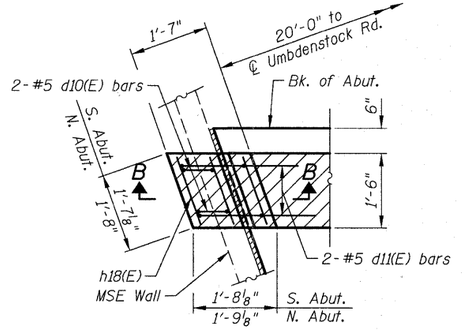

DETAIL "B"

(South Abutment shown, North Abutment is mirror image.)

BILL OF MATERIAL

Bar	No.	Size	Length	Shape
d_{10} (E)	8	#5	5'-6"	
d_{11} (E)	8	#5	7'-9"	
h_{10} (E)	8	#5	26'-9"	
h_{11} (E)	2	#5	10'-10"	
h_{12} (E)	4	#5	13'-8"	
h_{13} (E)	2	#5	12'-9"	
h_{14} (E)	4	#5	5'-4"	
h_{15} (E)	8	#6	28'-3"	
h_{16} (E)	2	#5	27'-10"	
h_{17} (E)	8	#5	4'-7"	
h_{18} (E)	44	#4	1'-3"	
h_{19} (E)	8	#5	27'-10"	
h_{20} (E)	2	#5	11'-10"	
h_{21} (E)	2	#5	13'-10"	
h_{22} (E)	8	#6	29'-4"	
h_{23} (E)	2	#5	29'-0"	
p_{10} (E)	12	#7	28'-1"	
p_{11} (E)	3	#7	15'-5"	
p_{12} (E)	12	#7	29'-0"	
p_{13} (E)	3	#7	23'-4"	
s_{10} (E)	97	#5	16'-11"	
s_{11} (E)	3	#5	17'-9"	
s_{12} (E)	4	#5	17'-5"	
s_{13} (E)	33	#4	8'-7"	
t_{10} (E)	186	#4	8'-2"	
t_{11} (E)	6	#4	8'-11"	
t_{12} (E)	8	#4	8'-8"	
t_{13} (E)	8	#4	8'-5"	
u_{10} (E)	2	#5	11'-2"	
u_{11} (E)	4	#5	11'-4"	
u_{12} (E)	2	#5	11'-5"	
v_{10} (E)	104	#5	3'-9"	
v_{11} (E)	104	#4	5'-6"	
v_{12} (E)	104	#4	3'-5"	
v_{13} (E)	104	#4	5'-5"	
v_{14} (E)	8	#5	4'-8"	
v_{15} (E)	8	#5	4'-10"	
w_{10} (E)	18	#5	26'-10"	
w_{11} (E)	18	#4	26'-8"	
w_{12} (E)	18	#5	27'-8"	
w_{13} (E)	18	#4	27'-6"	
Concrete Structures		Cu. Yd.	128.9	
Concrete Superstructure		Cu. Yd.	10.5	
Reinforcement Bars, Epoxy Coated		Pound	9,700	
Bar Splicers		Each	104	
Concrete Sealer		Sq. Ft.	592	

Bars indicated thus 9x2-#5 etc. indicates 9 lines of bars with 2 lengths per line.

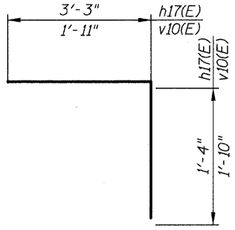

BARS h17(E) & v10(E)

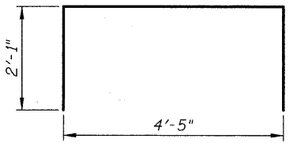

BAR s13(E)

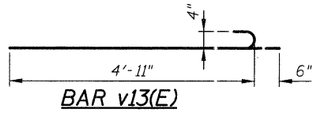

BAR v13(E)

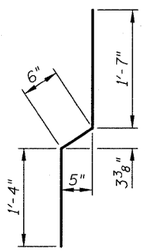

BAR v12(E)

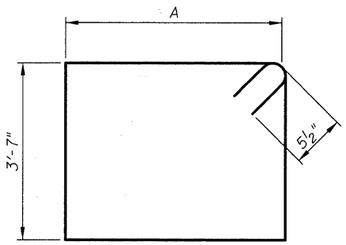

BAR s10(E) thru s12(E)

Dimensions

Bar	A
s10(E)	4'-5"
s11(E)	4'-10"
s12(E)	4'-8"

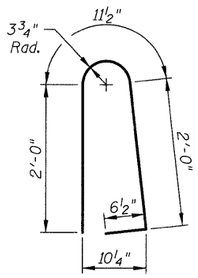

BAR d10(E)

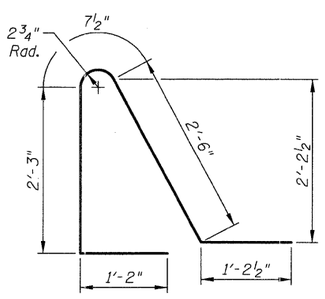

BAR d11(E)

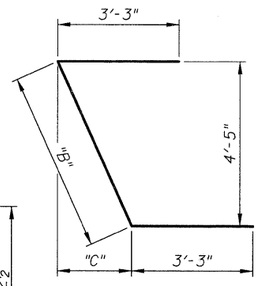

BAR u10(E) thru u12(E)

Dimensions

Bar	B	C
u10(E)	4'-8"	1'-6⅞"
u11(E)	4'-10"	1'-11⅞"
u12(E)	4'-11"	2'-1⅝"

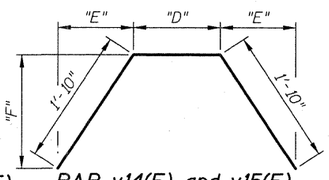

BAR v14(E) and v15(E)

Dimensions

Bar	D	E	F
v14(E)	1'-0"	1'-1¼"	1'-5⅛"
v15(E)	1'-2"	1'-0⅛"	1'-6⅜"

Notes:

Hatched area to be poured after superstructure false work has been removed. Quantity of concrete includedwith Concrete Superstructure.

Concrete sealer shall be applied to backwalls and bridge seats.

CIVILTECH
450 E Devon Ave, Suite 300
Itasca, Illinois 60143
Tel: 630.773.3900 Fax: 630.773.3975
www.civiltechinc.com

DESIGNED - D. Atkins	REVISED -	
DRAWN - D. Atkins	REVISED -	
CHECKED - G. Hatlestad	REVISED -	
DATE - March 25, 2011	REVISED -	

STATE OF ILLINOIS
DEPARTMENT OF TRANSPORTATION

ABUTMENT DETAILS
UMBDENSTOCK ROAD OVER CC&P RR
STRUCTURE NO. 045-3162
SHEET NO. S15 OF S28 SHEETS

F.A.P. RTE.	SECTION	COUNTY	TOTAL SHEETS	SHEET NO.
361	06-00214-27-BR	KANE	87	48
		CONTRACT NO. 63595		
FED. ROAD DISTRICT 1	ILLINOIS	FED. AID PROJECT		

mfl 3/24/2011 4:16:41 PM J:\2372\cad\struct\15_Abutment_Details.dgn

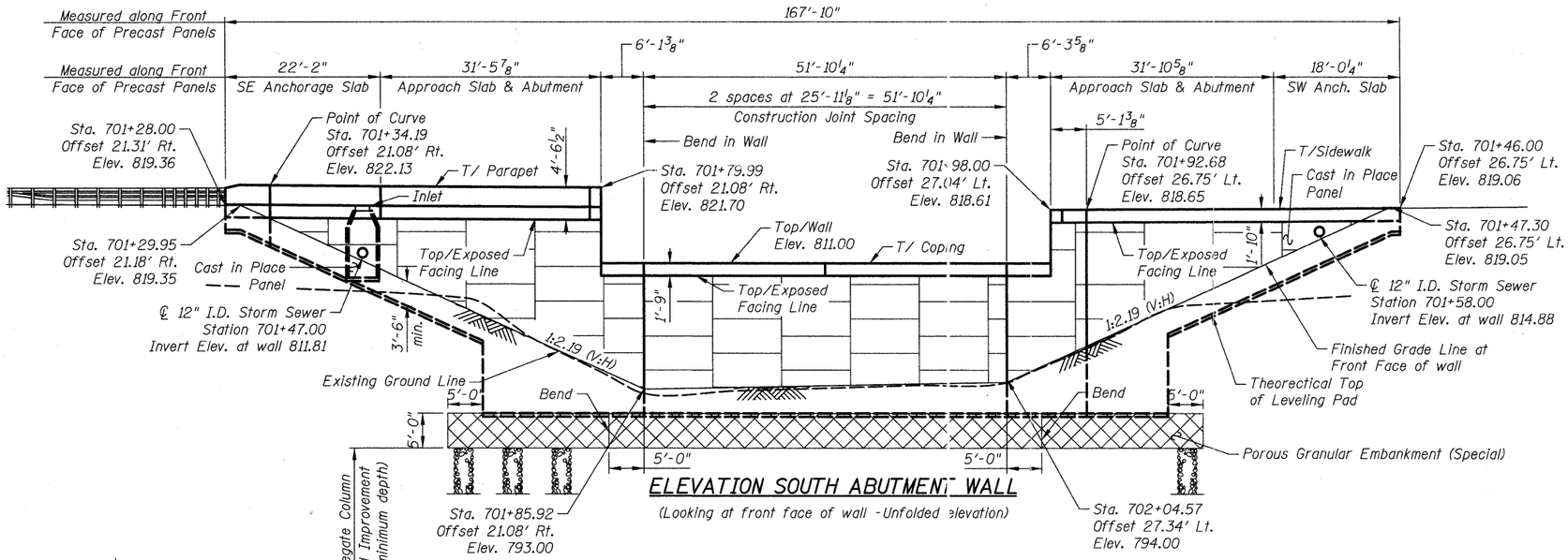

ELEVATION SOUTH ABUTMENT WALL

(Looking at front face of wall - Unfolded Elevation)

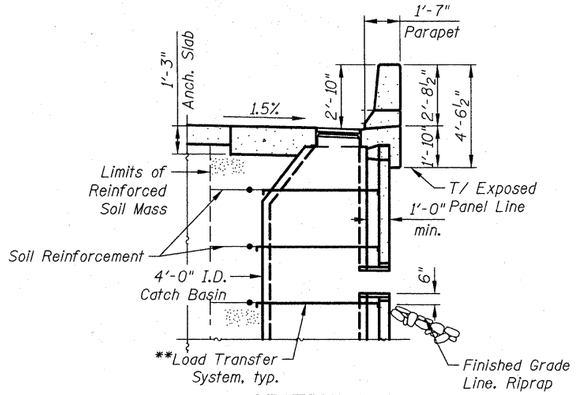

SECTION A-A

(See Section D-D on sheet S20 for Dimensions not shown)

**M.S.E. supplier to design load transfer system to accommodate concrete pipe and catch basin.

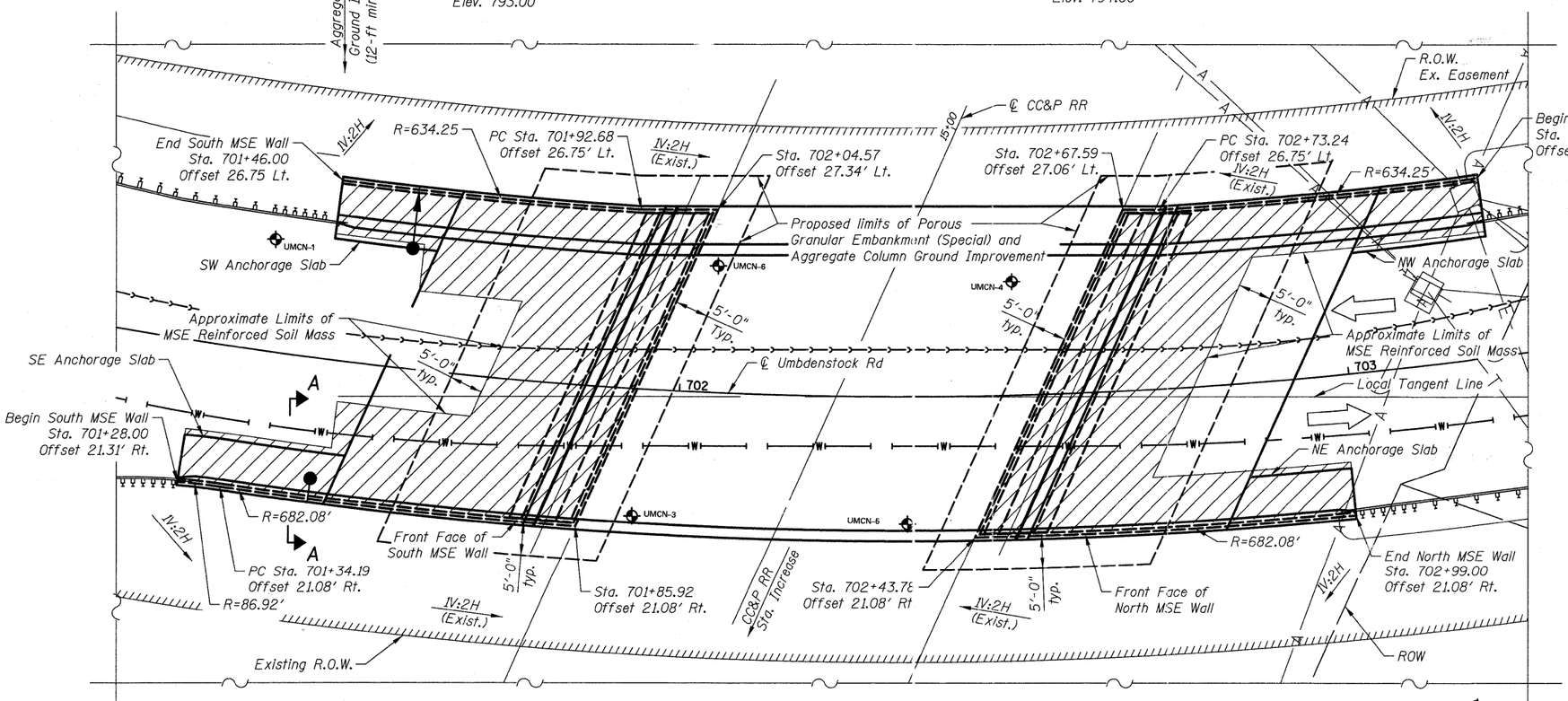

PLAN

Notes:

Panels must be arranged to provide continuous vertical joints for the full height of the wall to accommodate potential differential settlement.

Exact location of Cast in Place Panels to be determined by Wall Supplier in accordance with Typical Cast In Place Panel Detail.

Offsets, stations and radii measured from ℄ Umbdenstock Rd. to the Front Face of MSE Wall.

See sheet S17 for elevation of North Abutment Wall and Bill of Material. C.I.P. Coping and Typical Cast In-Place panels to be included in the cost of Mechanically Stabalized Earth Retaining Wall.

Neither the construction of the CIP Coping, Anchorage Slabs, Approach Pavements, Roadway Pavement nor Abutments or the Bridge Superstructure shall begin until after the embankment and MSE retaining walls have been in place for 3 months, after which time more than 1 inch of settlement is anticipated to occur, and without prior approval of the Engineer.

For Frame and Grate type, Catch Basin Type and rim invert elevations see Drainage and Utility plans.

CIVILTECH
450 E Devon Ave, Suite 300
Itasca, Illinois 60143
Tel: 630.773.3900 Fax: 630.773.3975
www.civiltechinc.com

DESIGNED	D. Atkins	REVISED	-
DRAWN	D. Atkins	REVISED	-
CHECKED	G. Hatlestad	REVISED	-
DATE	March 25, 2011	REVISED	-

STATE OF ILLINOIS
DEPARTMENT OF TRANSPORTATION

MSE WALL DETAILS I
UMBDENSTOCK ROAD OVER CC&P RR
STRUCTURE NO. 045-3162
SHEET NO. S16 OF S28 SHEETS

F.A.P. RTE.	SECTION	COUNTY	TOTAL SHEETS	SHEET NO.
361	06-00214-27-BR	KANE	87	49
		CONTRACT NO. 63595		
FED. ROAD DISTRICT 1	ILLINOIS	FED. AID PROJECT		

mfl 3/24/2011 4:16:43 PM J:\2372\cad\struct\16_MSE WallDetails.dgn

Notes:

Panels must be arranged to provide continuous vertical joints for the full height of the wall to accommodate potenial differential settlement.

Stations and offsets measured from the ℄ of Umdenstock Rd. to the front face of the precast panels.

The limits and quantities of removal and replacement shown are based on the boring data and may be modified by the District Geotechnical and Field Engineers for variable subsurface conditions encountered in the field.

Concrete and Reinforcement in C.I.P. Coping and C.I.P. panels to be included in the pay item Mechanically Stabalized Earth Retaining Wall

BILL OF MATERIAL

ITEM	UNIT	TOTAL
Structure Excavation	Cu. Yd.	2,137
Aggregate Column Ground Improvement	L. Sum	1
Porous Granular Embankment (Special)	Cu. Yd.	723
Mechanically Stabalized Earth Retaining Wall	Sq. Ft.	5,514

*The MSE wall supplier's internal stability design shall account for the footing's bearing pressure surcharge of 4 ksf and horizontal sliding force of 3.15 kips/ft. of abutment

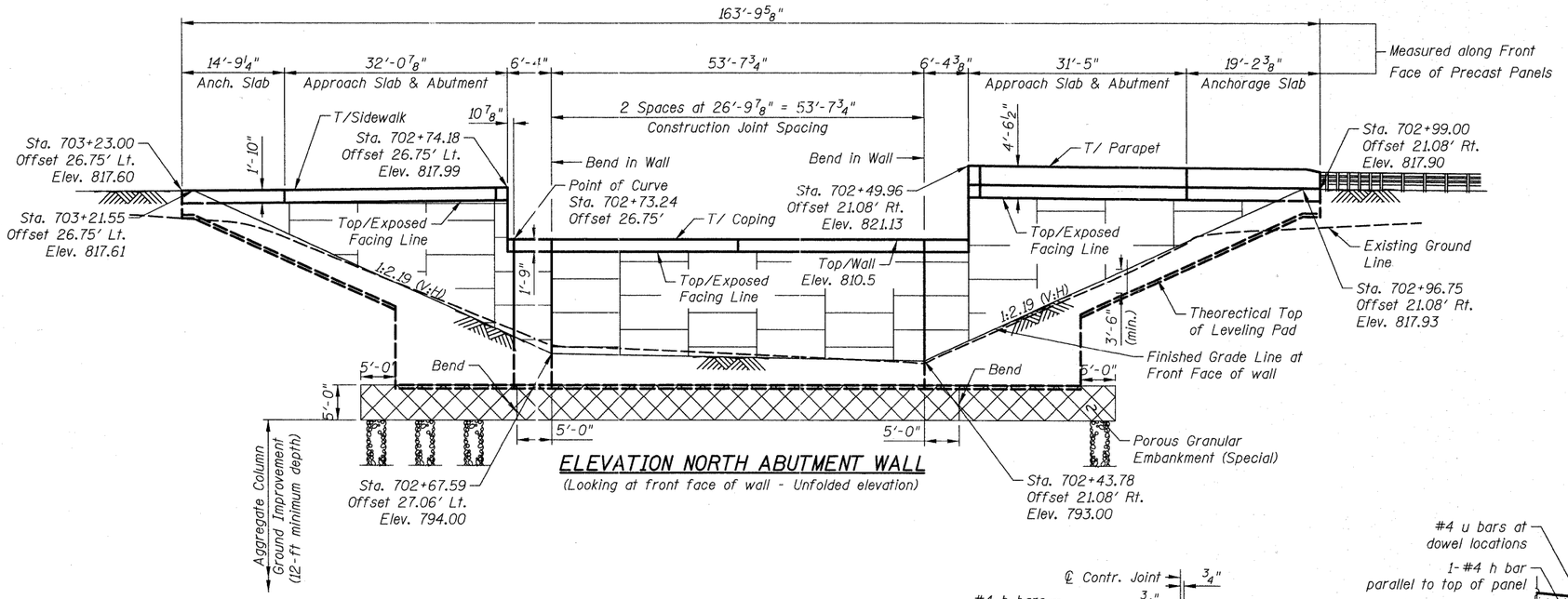

ELEVATION NORTH ABUTMENT WALL

(Looking at front face of wall - Unfolded elevation)

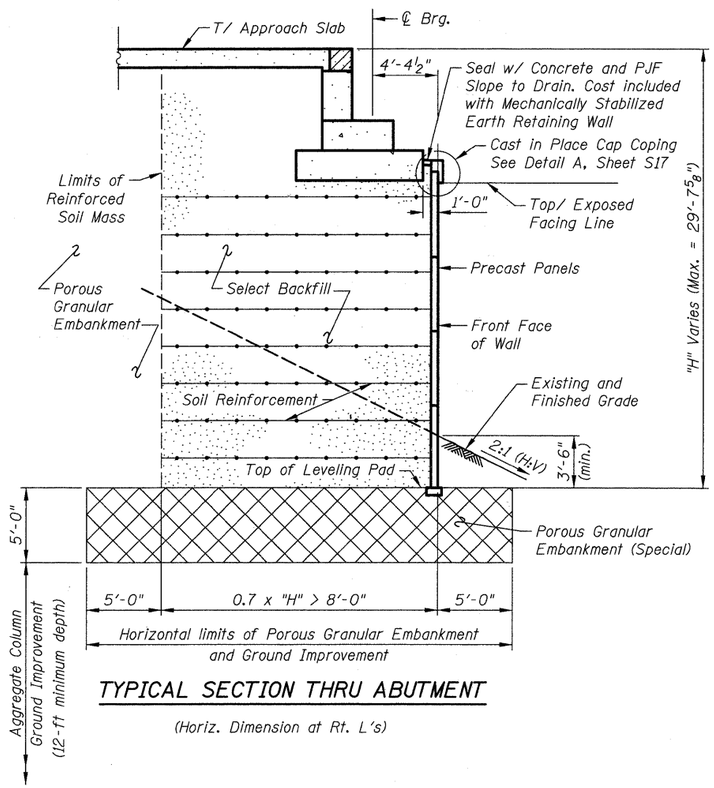

TYPICAL SECTION THRU ABUTMENT

(Horiz. Dimension at Rt. L's)

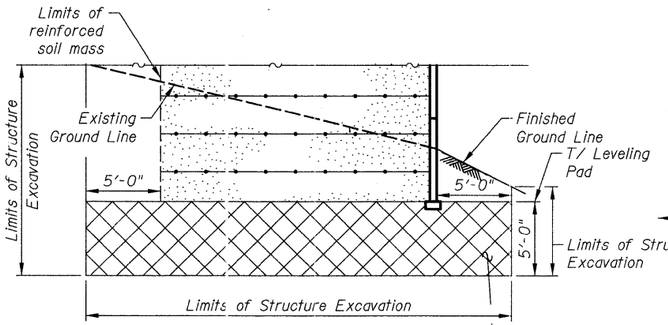

LIMITS OF STRUCTURE EXCAVATION

(Section for undercut areas)

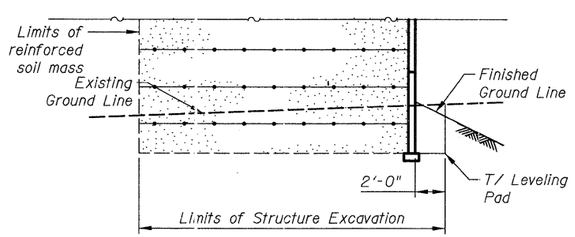

LIMITS OF STRUCTURE EXCAVATION

(Section for areas without undercut)

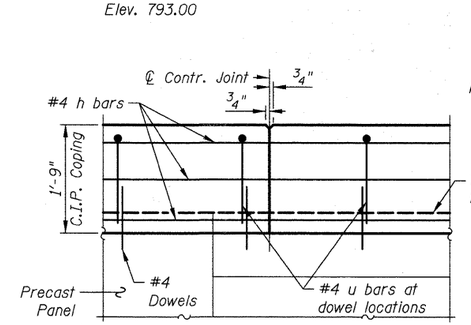

CIP CONTRACTION JOINT - ELEVATION

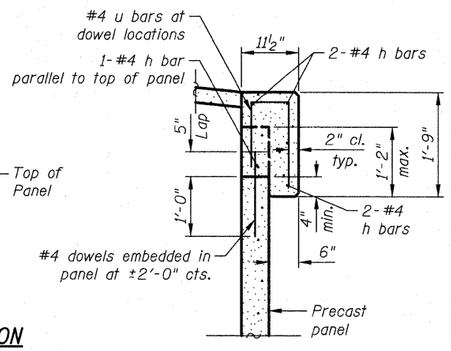

DETAIL A

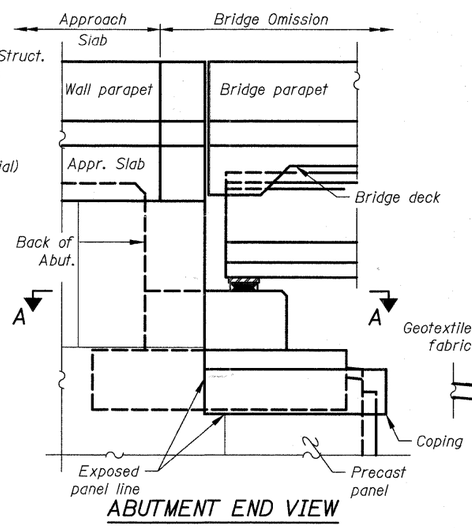

ABUTMENT END VIEW

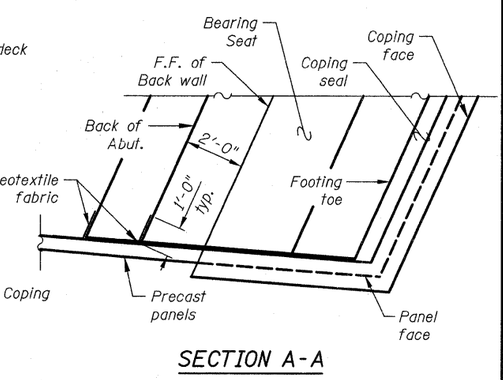

SECTION A-A

CIVILTECH
450 E Devon Ave, Suite 300
Itasca, Illinois 60143
Tel: 630.773.3900 Fax: 630.773.3975
www.civiltechinc.com

DESIGNED - D. Atkins	REVISED -	
DRAWN - D. Atkins	REVISED -	
CHECKED - G. Hatlestad	REVISED -	
DATE - March 25, 2011	REVISED -	

STATE OF ILLINOIS
DEPARTMENT OF TRANSPORTATION

MSE WALL DETAILS II
UMBDENSTOCK ROAD OVER CC&P RR
STRUCTURE NO. 045-3162
SHEET NO. S17 OF S28 SHEETS

F.A.P. RTE.	SECTION	COUNTY	TOTAL SHEETS	SHEET NO.
361	06-00214-27-BR	KANE	87	50
		CONTRACT NO. 63595		
FED. ROAD DISTRICT 1	ILLINOIS	FED. AID PROJECT		

J:\2372\cad\structNT_MSE Wall Details 2.dgn
4:16:45 PM
3/24/2011
mfl

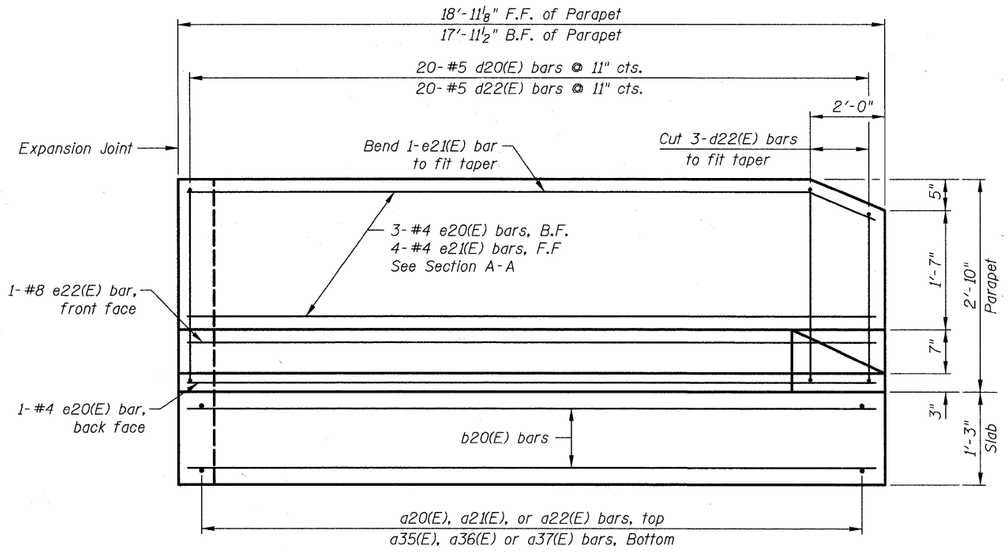

ELEVATION NW ANCHORAGE SLAB

(Front face of parapet)

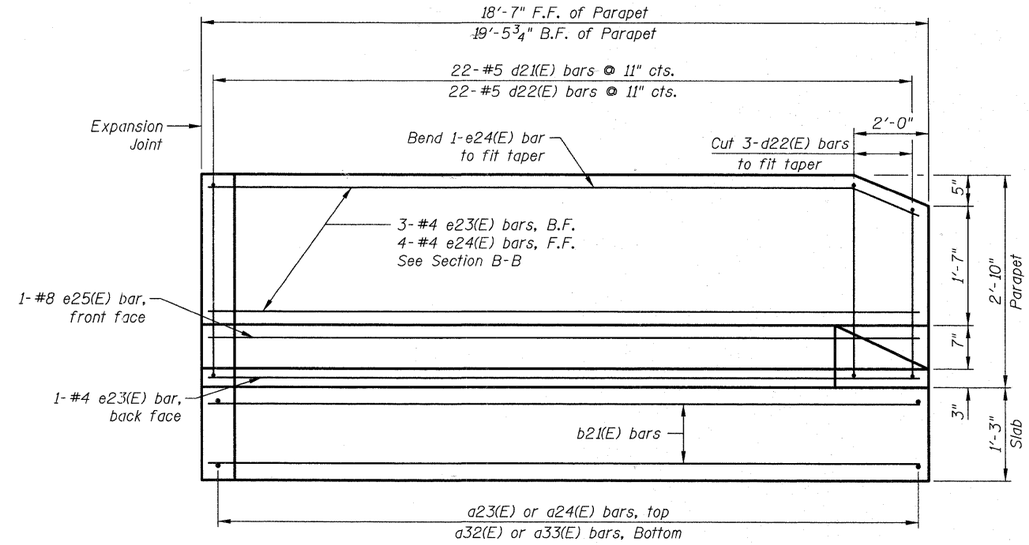

ELEVATION NE ANCHORAGE SLAB

(Front face of parapet)

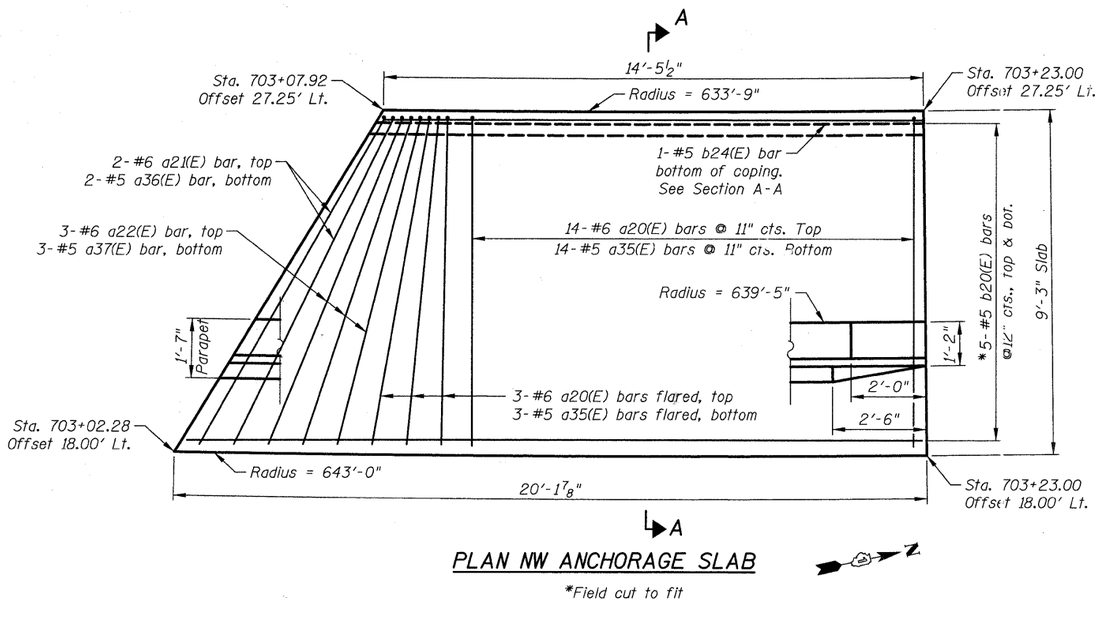

PLAN NW ANCHORAGE SLAB

*Field cut to fit

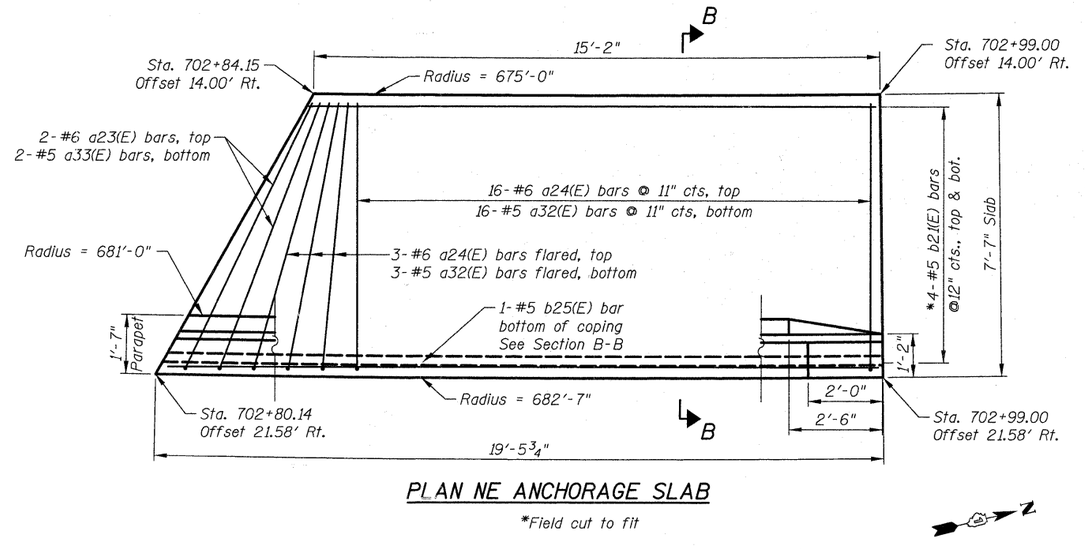

PLAN NE ANCHORAGE SLAB

*Field cut to fit

Notes:
1. See sheet S20 for Section A-A, B-B and Bill of Materials
2. See sheet S16 and S17 for MSE wall details.

CIVILTECH
450 E Devon Ave, Suite 300
Itasca, Illinois 60143
Tel: 630.773.3900 Fax: 630.773.3975
www.civiltechinc.com

DESIGNED	D. Atkins	REVISED	-
DRAWN	D. Atkins	REVISED	-
CHECKED	G. Hatlestad	REVISED	-
DATE	March 25, 2011	REVISED	-

STATE OF ILLINOIS
DEPARTMENT OF TRANSPORTATION

NORTHWEST AND NORTHEAST ANCHORAGE SLAB
UMBDENSTOCK ROAD OVER CC&P RR
STRUCTURE NO. 045-3162
SHEET NO. S18 OF S28 SHEETS

F.A.P. RTE.	SECTION	COUNTY	TOTAL SHEETS	SHEET NO.
361	06-00214-27-BR	KANE	87	51
		CONTRACT NO. 63595		
FED. ROAD DISTRICT 1	ILLINOIS	FED. AID PROJECT		

mfl 3/24/2011 4:16:47 PM J:\2372\cad\struct\18_NW & NE Anchorage Slab.dgn

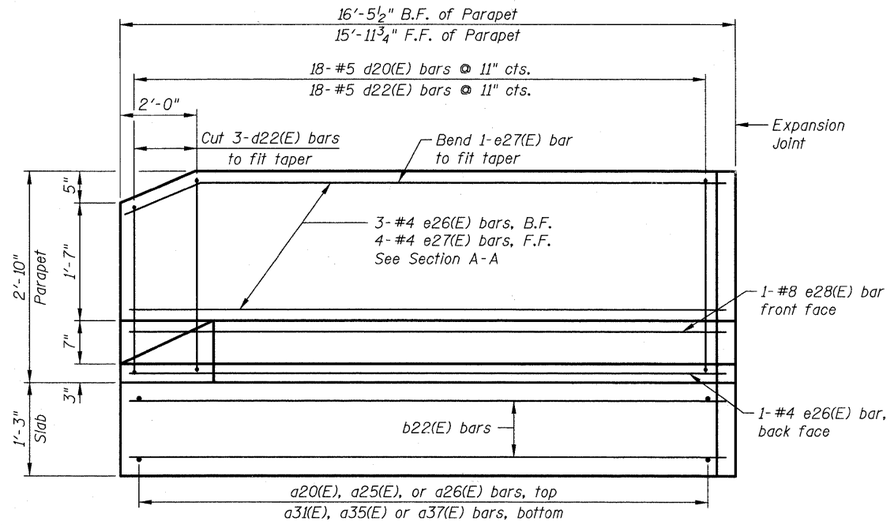

ELEVATION SW ANCHORAGE SLAB

(Front face of parapet)

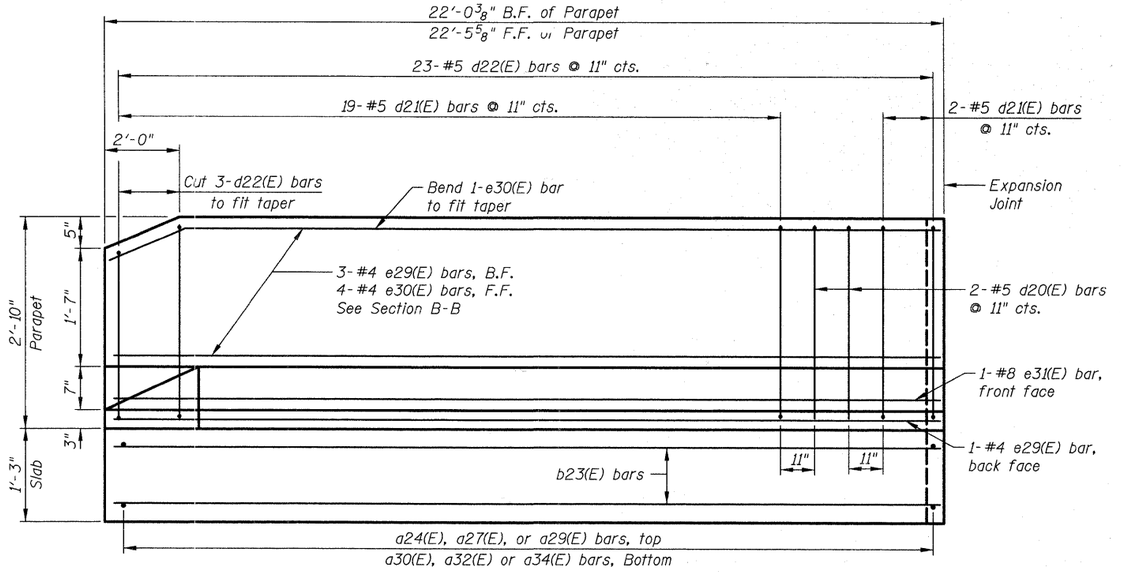

ELEVATION SE ANCHORAGE SLAB

(Front face of parapet)

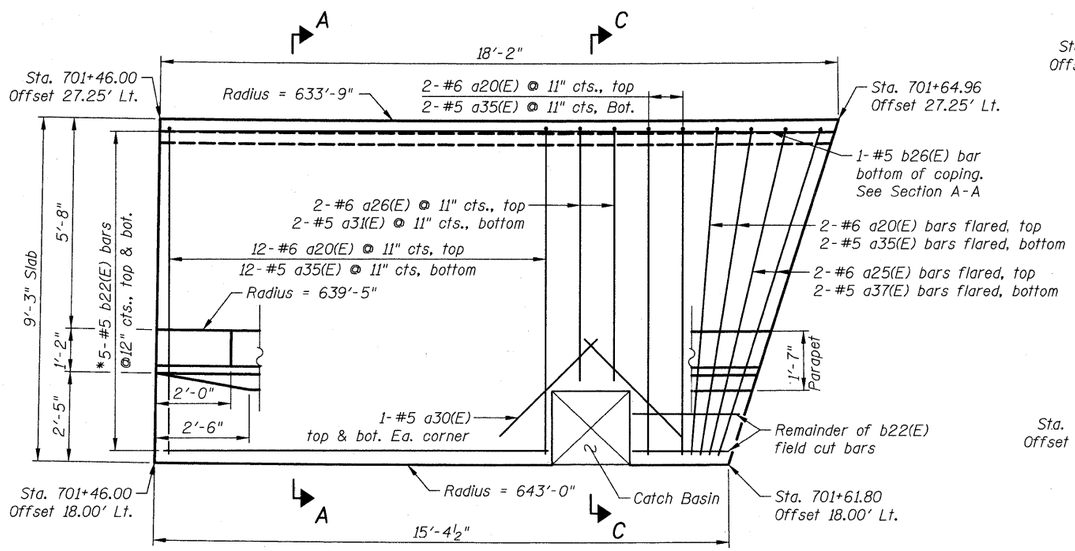

PLAN SW ANCHORAGE SLAB

*Field cut to fit

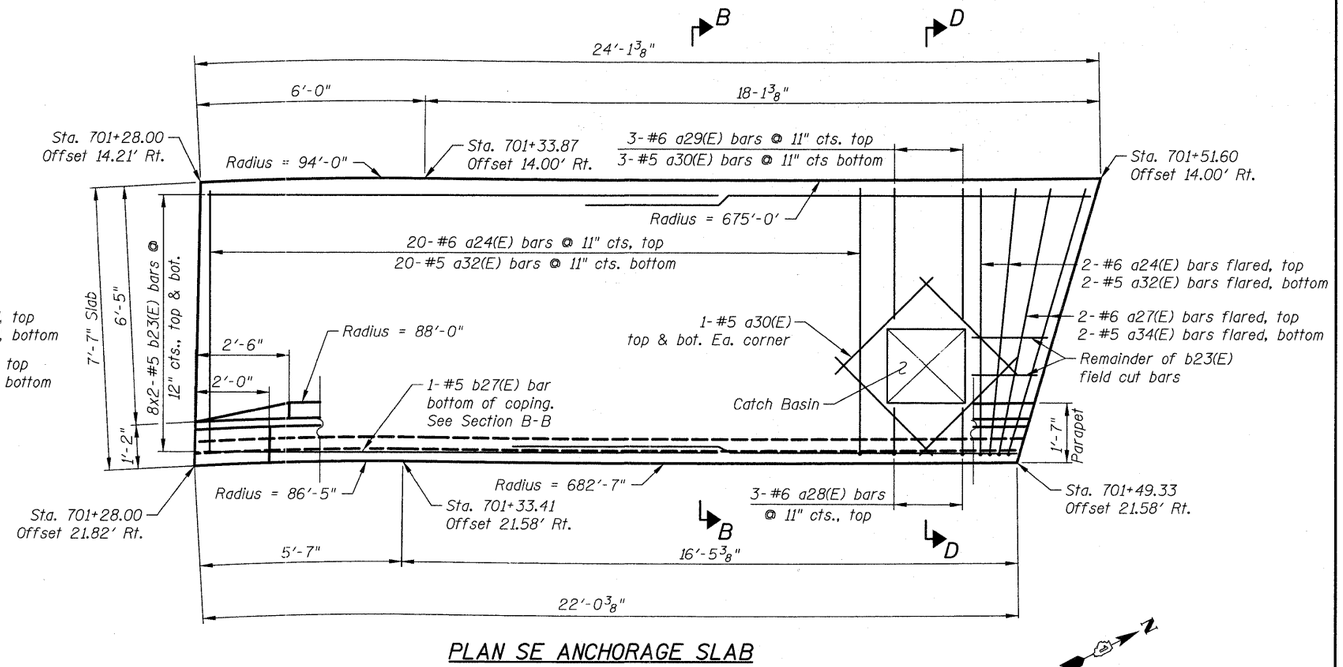

PLAN SE ANCHORAGE SLAB

MINIMUM BAR LAP

(Anchorage Slab)
#5 bar = 3'-3"

Notes:
1. See sheet S16 and S17 for MSE wall details.
2. See sheet S20 for Section A-A, B-B and Bill of Material.
3. See roadway plans for drainage information.

CIVILTECH
450 E Devon Ave, Suite 300
Itasca, Illinois 60143
Tel: 630.773.3900 Fax: 630.773.3975
www.civiltechinc.com

DESIGNED	D. Atkins	REVISED	-
DRAWN	D. Atkins	REVISED	-
CHECKED	G. Hatlestad	REVISED	-
DATE	March 25, 2011	REVISED	-

STATE OF ILLINOIS
DEPARTMENT OF TRANSPORTATION

SOUTHWEST AND SOUTHEAST ANCHORAGE SLAB
UMBDENSTOCK ROAD OVER CC&P RR
STRUCTURE NO. 045-3162
SHEET NO. S19 OF S28 SHEETS

F.A.P. RTE.	SECTION	COUNTY	TOTAL SHEETS	SHEET NO.
361	06-00214-27-BR	KANE	87	52
		CONTRACT NO. 63595		
FED. ROAD DISTRICT 1	ILLINOIS	FED. AID PROJECT		

mfl 3/24/2011 4:46:48 PM J:\2372\cad\str-cad\V19_SW & SE Anchorage Slab.dgn

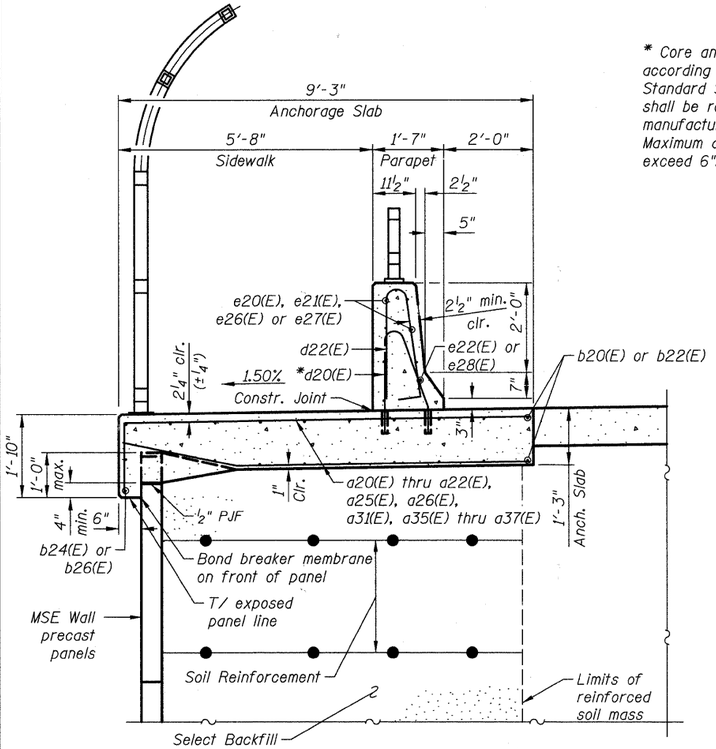

SECTION A-A

* Core and set #5 d20(E) bars according to Article 509.06 of the Standard Specifications. Cored holes shall be roughened or scored per manufacture's recommendations. Maximum depth of hole shall not exceed 6".

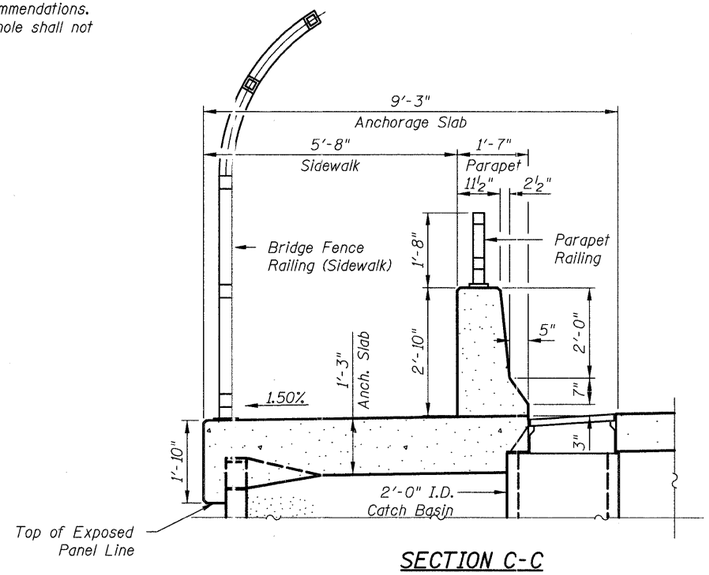

SECTION C-C

(See Section A-A for reinforcement)

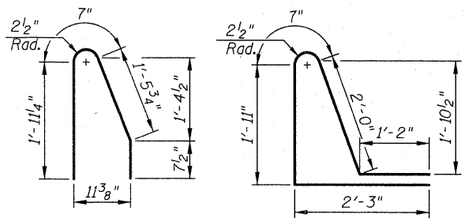

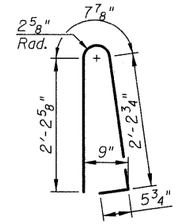

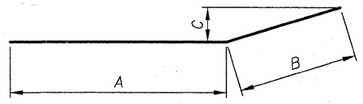

Bar	A	B	C
a32(E)	4'-11"	2'-7"	8 5/8"
a33(E)	5'-6"	2'-7"	8 5/8"
a34(E)	5'-1"	2'-7"	8 5/8"
a35(E)	6'-6"	2'-7"	6 1/8"
a36(E)	7'-9"	2'-7"	6 1/8"
a37(E)	7'-0"	2'-7"	6 1/8"

BARS a32(E) THRU a37(E)

SUPERSTRUCTURE BILL OF MATERIAL

Bar	No.	Size	Length	Shape
a20(E)	33	#6	10'-5"	
a21(E)	2	#6	11'-8"	
a22(E)	3	#6	10'-11"	
a23(E)	2	#6	9'-4"	
a24(E)	41	#6	8'-9"	
a25(E)	2	#6	10'-8"	
a26(E)	2	#6	8'-5"	
a27(E)	2	#6	8'-11"	
a28(E)	3	#6	2'-8"	
a29(E)	3	#6	3'-8"	
a30(E)	15	#5	3'-8"	
a31(E)	2	#5	7'-0"	
a32(E)	41	#5	7'-6"	
a33(E)	2	#5	8'-1"	
a34(E)	2	#5	7'-8"	
a35(E)	33	#5	9'-1"	
a36(E)	2	#5	10'-4"	
a37(E)	5	#5	9'-7"	
b20(E)	10	#5	33'-11"	
b21(E)	8	#5	34'-0"	
b22(E)	10	#5	32'-10"	
b23(E)	32	#5	13'-6"	
b24(E)	1	#5	14'-2"	
b25(E)	1	#5	19'-0"	
b26(E)	1	#5	17'-9"	
b27(E)	1	#5	21'-9"	
d20(E)	40	#5	4'-8"	
d21(E)	43	#5	7'-11"	
d22(E)	83	#5	5'-7"	
e20(E)	4	#4	17'-9"	
e21(E)	4	#4	18'-3"	
e22(E)	1	#8	18'-3"	
e23(E)	4	#4	19'-0"	
e24(E)	4	#4	18'-8"	
e25(E)	1	#8	18'-8"	
e26(E)	4	#4	16'-1"	
e27(E)	4	#4	15'-10"	
e28(E)	1	#8	15'-10"	
e29(E)	4	#4	21'-9"	
e30(E)	4	#4	22'-0"	
e31(E)	1	#8	22'-0"	
Concrete Superstructure		Cu. Yds.	40.0	
Protective Coat		Sq. Yd.	93.0	
Reinforcement Bars, Epoxy Coated		Pound	5,230	

Bars indicated thus 8x2 - #5 etc. indicates 8 lines of bars with 2 length per line

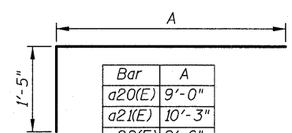

Bar	A
a20(E)	9'-0"
a21(E)	10'-3"
a22(E)	9'-6"
a23(E)	7'-11"
a24(E)	7'-4"
a25(E)	9'-3"
a26(E)	7'-0"
a27(E)	7'-6"
a28(E)	1'-3"

BARS a20(E) THRU a28(E)

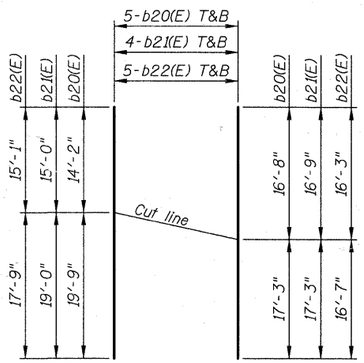

BARS b20(E) THRU b22(E)

T&B indicates top and Bottom

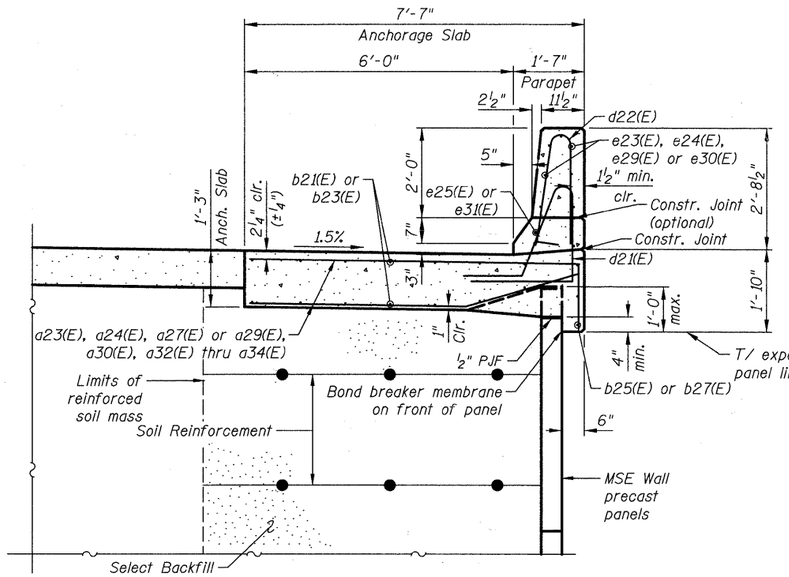

SECTION B-B

**M.S.E. supplier to design load transfer system to accommodate concrete pipe and catch basin.

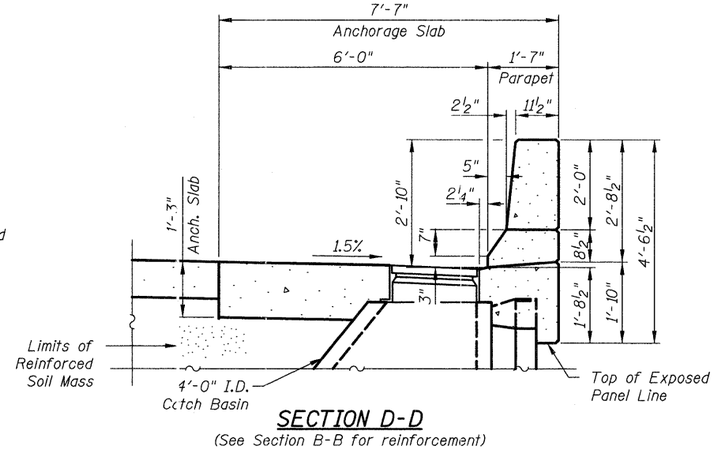

SECTION D-D

(See Section B-B for reinforcement)

Notes:
1. See sheet S16 and S17 for MSE wall details.
2. See roadway plans for drainage information.

CIVILTECH
450 E Devon Ave, Suite 300
Itasca, Illinois 60143
Tel: 630.773.3900 Fax: 630.773.3975
www.civiltechinc.com

DESIGNED	D. Atkins	REVISED	4-11-11
DRAWN	D. Atkins	REVISED	-
CHECKED	G. Hatlestad	REVISED	-
DATE	March 25, 2011	REVISED	-

STATE OF ILLINOIS
DEPARTMENT OF TRANSPORTATION

ANCHORAGE SLAB DETAILS
UMBDENSTOCK ROAD OVER CC&P RR
STRUCTURE NO. 045-3162
SHEET NO. S20 OF S28 SHEETS

F.A.P. RTE.	SECTION	COUNTY	TOTAL SHEETS	SHEET NO.
361	06-00214-27-BR	KANE	87	53
		CONTRACT NO. 63595		
FED. ROAD DISTRICT 1	ILLINOIS	FED. AID PROJECT		

mfl 4/7/2011 3:20:43 PM J:\2372\cad\struct\20_Anchorage Slab Details.dgn

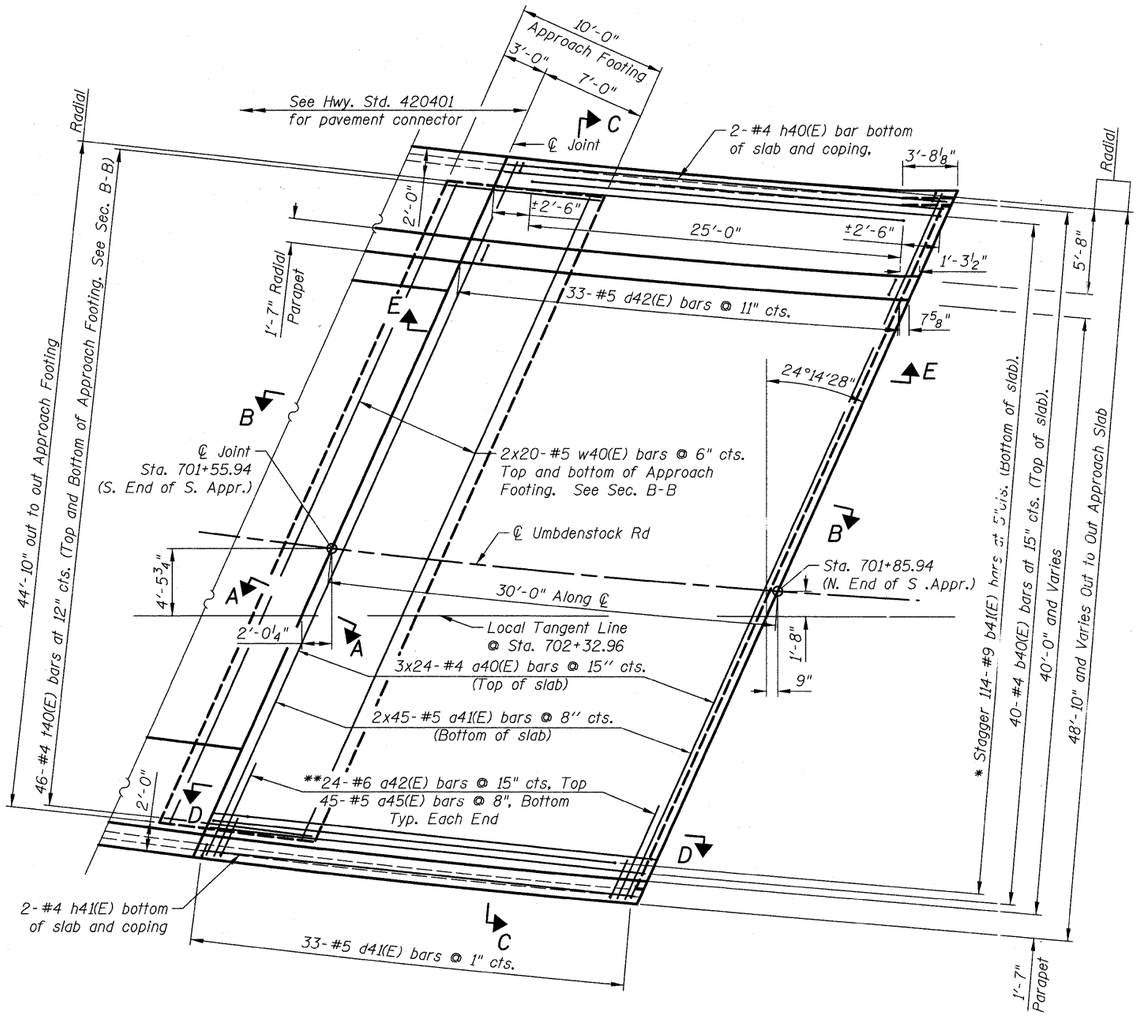

SOUTH APPROACH SLAB PLAN

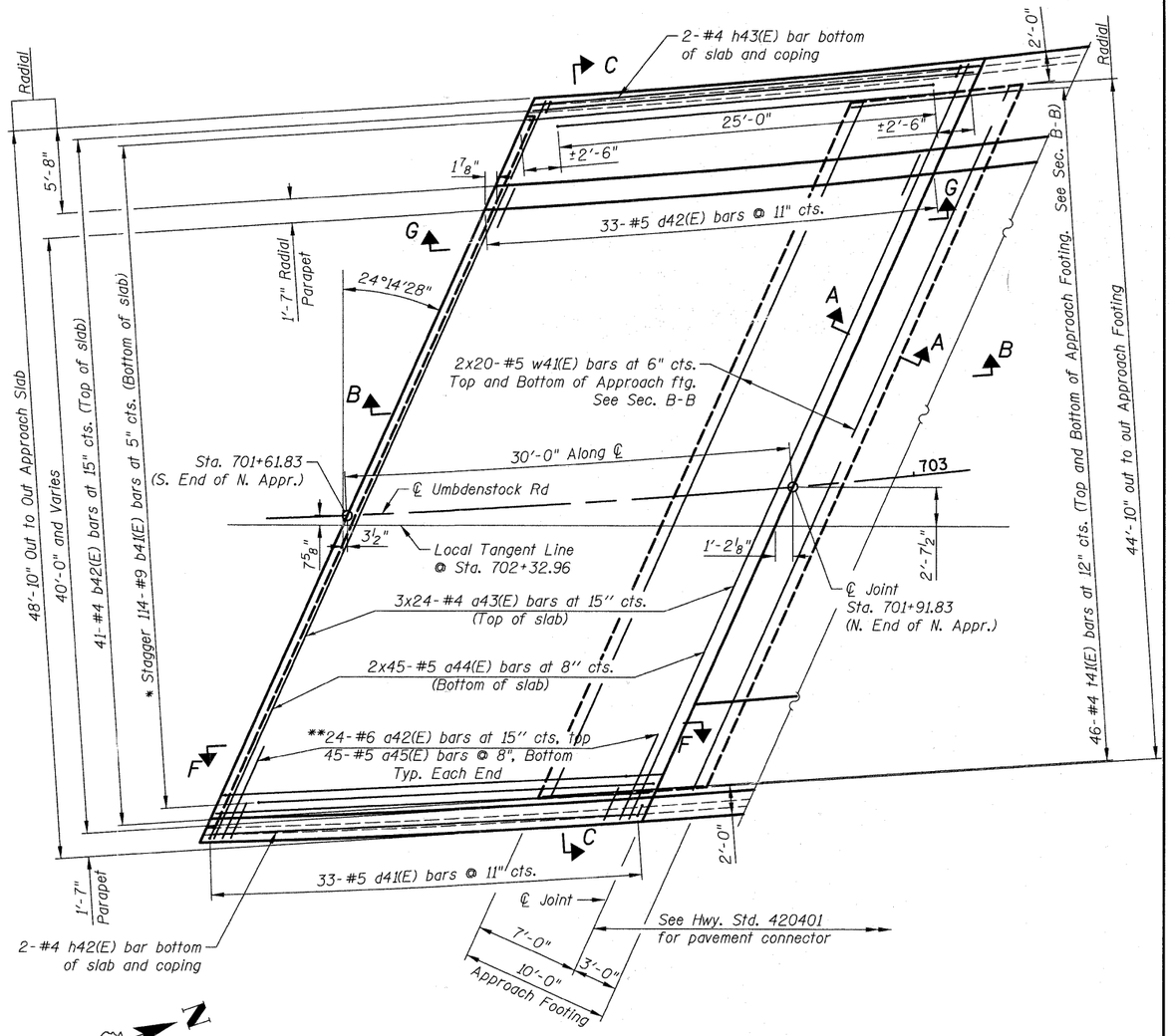

NORTH APPROACH SLAB PLAN

MINIMUM BAR LAP

(Approach Slab)
#4 bar = 2'-7"
#5 bar = 3'-3"

* Tilt #9 b41(E) bars as required to maintain clearance.
** Space top bars between a40(E) and a43(E) bars

Notes:

See sheet S22 for Sections A-A, B-B, C-C, and D-D.

See sheet S23 for Sections E-E, F-F, and G-G.

d(E) bars spacings are measured along the ℄ roadway.

See sheet S23 for Bill of Material.

CIVILTECH
450 E Devon Ave, Suite 300
Itasca, Illinois 60143
Tel: 630.773.3900 Fax: 630.773.3975
www.civiltechinc.com

DESIGNED	D. Atkins	REVISED	-
DRAWN	D. Atkins	REVISED	-
CHECKED	G. Hatlestad	REVISED	-
DATE	March 25, 2011	REVISED	-

STATE OF ILLINOIS
DEPARTMENT OF TRANSPORTATION

BRIDGE APPROACH SLAB
UMBDENSTOCK ROAD OVER CC&P RR
STRUCTURE NO. 045-3162
SHEET NO. S21 OF S28 SHEETS

F.A.P. RTE.	SECTION	COUNTY	TOTAL SHEETS	SHEET NO.
361	06-00214-27-BR	KANE	87	54
		CONTRACT NO. 63595		
FED. ROAD DISTRICT 1	ILLINOIS	FED. AID PROJECT		

mfi 3/24/2011 4:16:50 PM J:\2372\cad\struct\2L Approach Slab.dgn

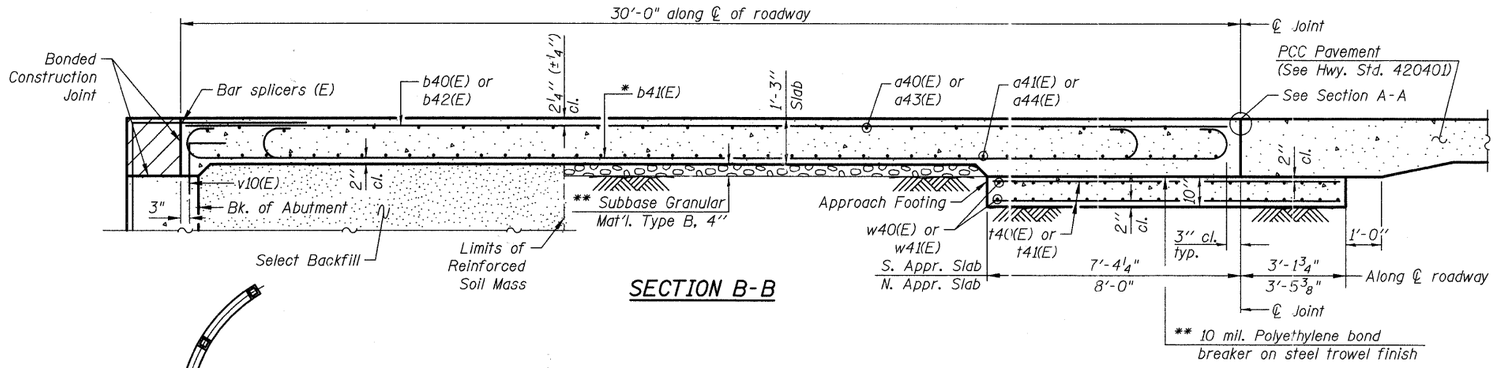

SECTION B-B

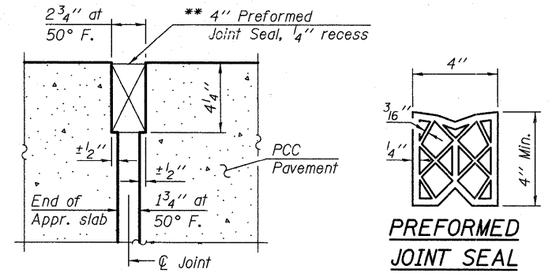

SECTION A-A

PREFORMED JOINT SEAL

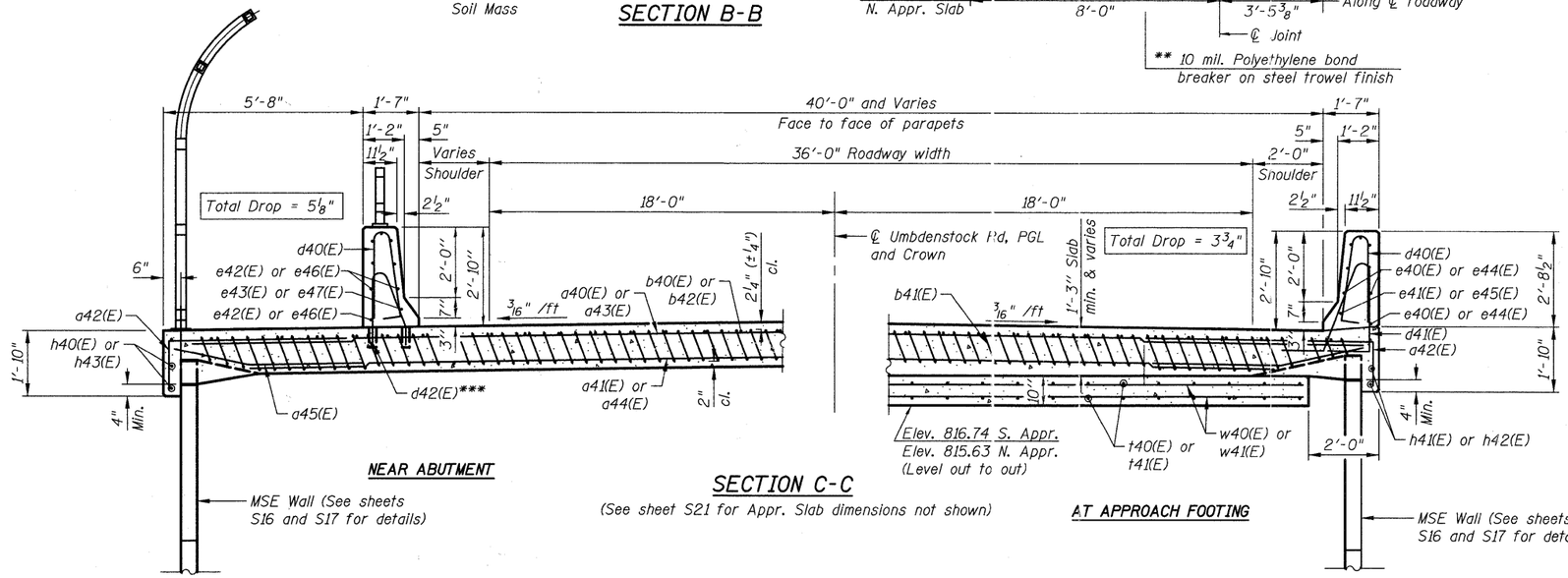

NEAR ABUTMENT

SECTION C-C

(See sheet S21 for Appr. Slab dimensions not shown)

AT APPROACH FOOTING

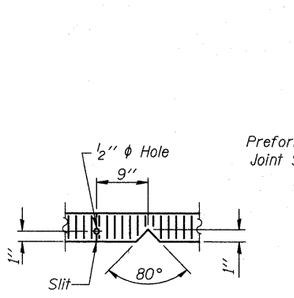

END OF SEAL CUT-OUT

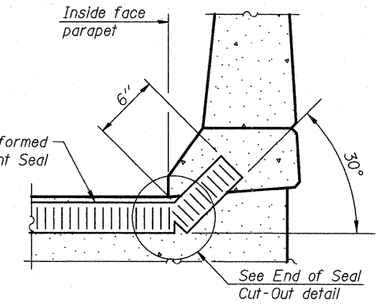

AT PARAPET

(Showing seal)

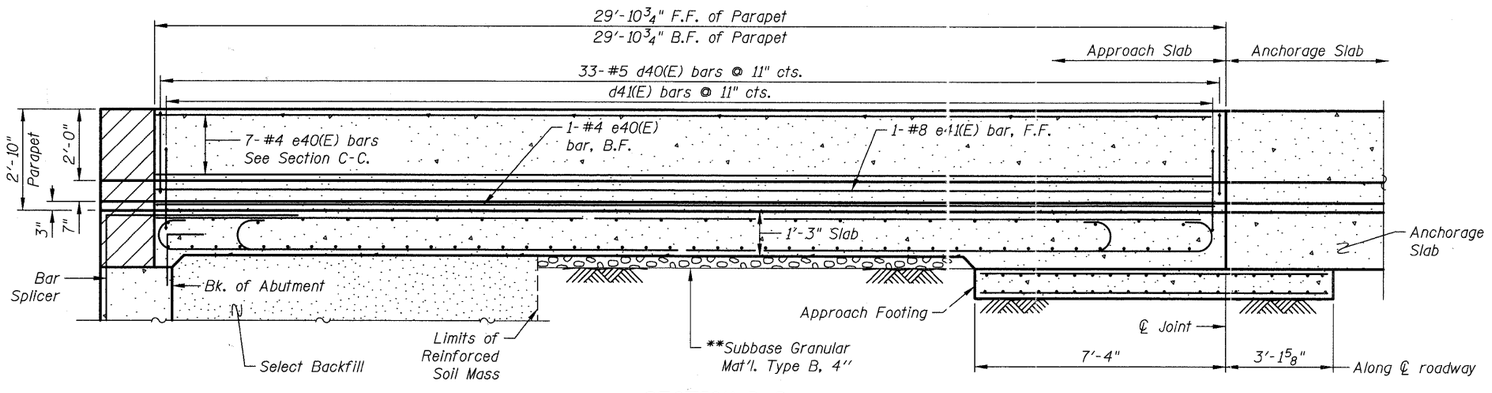

SECTION D-D

(See Section B-B for Balance of Information)

Hatched area to be poured after supstructure false work has been removed. See Abutment sheets S13 thru S15.

* Tilt #9 b41(E) bars as required to maintain clearance.

** Cost included with Concrete Superstructure.

*** Core and set #5 d42(E) bars according to Article 509.06 of the Standard Specifications. Cored holes shall be roughened or scored per manufacturer's recommendations. Maximum depth of the hole shall not exceed 6".

Notes:
See sheet S23 for Bill of Material
For v10(E) bar details, see sheet S13 thru S15
The approach footing maximum applied service bearing pressure (Qmax) = 2.0 ksf.
For bar splicer details, see sheet S25.
For additional parapet details, see sheet S23.

J:\2372\cad\struct\22_Bridge Appr Slab Details 1.dgn
3:20:45 PM
mfl
4/7/2011

CIVILTECH
450 E Devon Ave, Suite 300
Itasca, Illinois 60143
Tel: 630.773.3900 Fax: 630.773.3975
www.civiltechinc.com

DESIGNED	D. Atkins	REVISED	4-11-11
DRAWN	D. Atkins	REVISED	-
CHECKED	G. Hatlestad	REVISED	-
DATE	March 25, 2011	REVISED	-

STATE OF ILLINOIS
DEPARTMENT OF TRANSPORTATION

BRIDGE APPROACH SLAB DETAILS I
UMBDENSTOCK ROAD OVER CC&P RR
STRUCTURE NO. 045-3162
SHEET NO. S22 OF S28 SHEETS

F.A.P. RTE.	SECTION	COUNTY	TOTAL SHEETS	SHEET NO.
361	06-00214-27-BR	KANE	87	55
		CONTRACT NO. 63595		
FED. ROAD DISTRICT 1	ILLINOIS	FED. AID PROJECT		

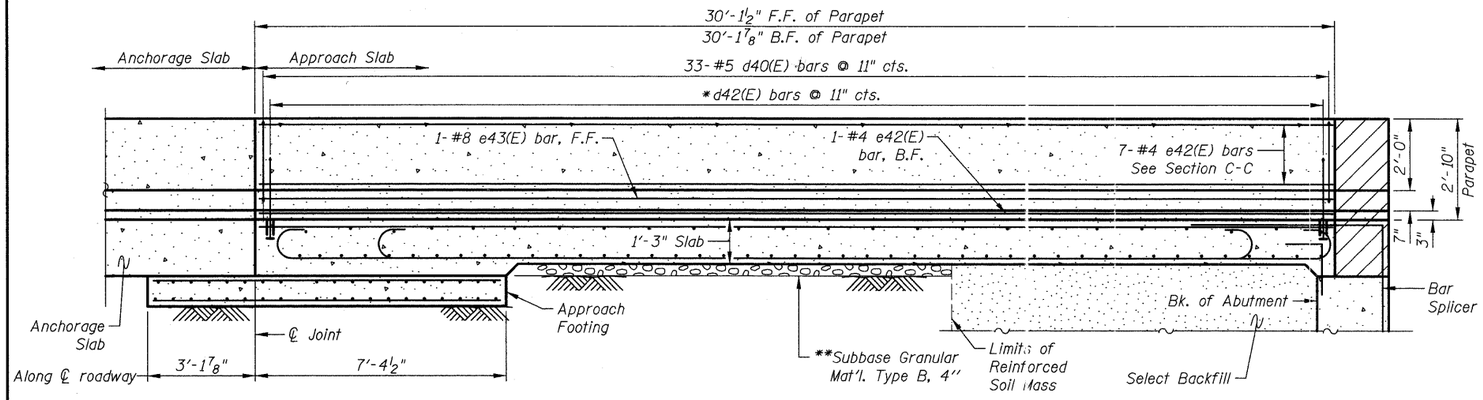

SECTION E-E

(See Section B-B on sheet S22 for Balance of Information)

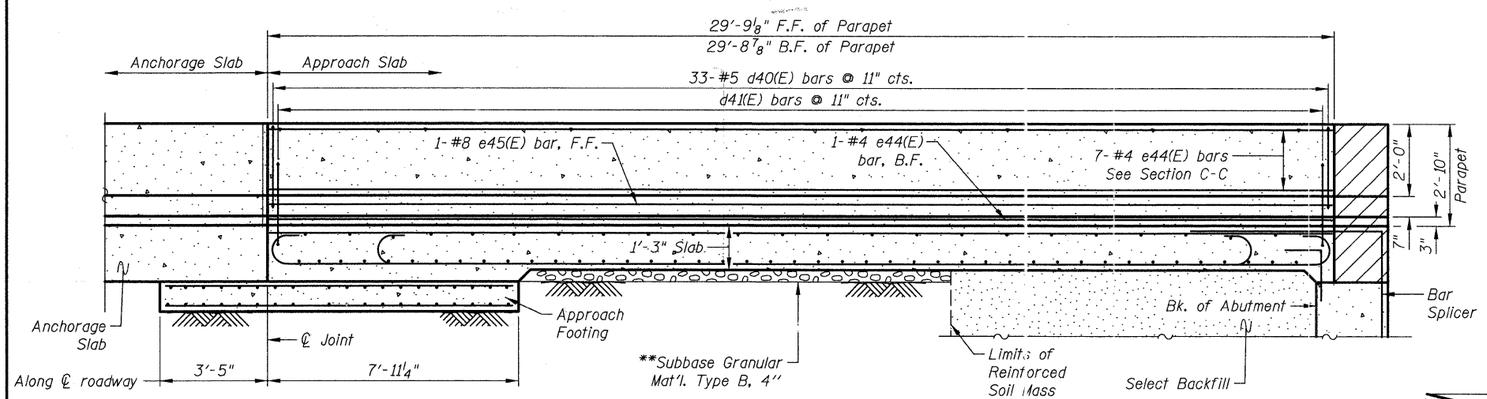

SECTION F-F

(See Section B-B on sheet S22 for Balance of Information)

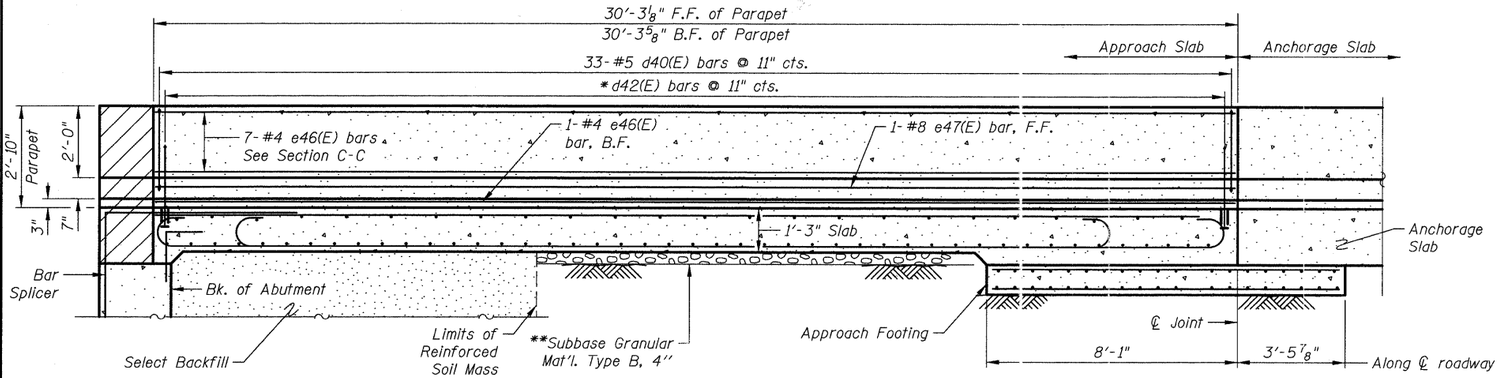

SECTION G-G

(See Section B-B on sheet S22 for Balance of Information)

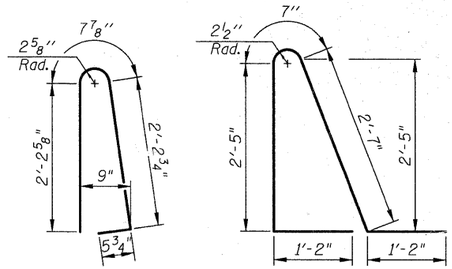

BAR d40(E)

BAR d41(E)

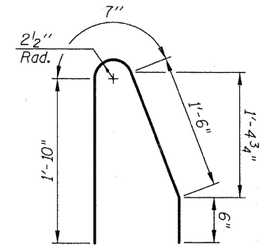

BAR d42(E)

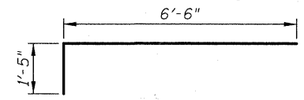

BAR a42(E)

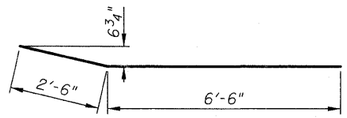

BAR a45(E)

TWO APPROACHES
BILL OF MATERIAL

Bar	No.	Size	Length	Shape
a_{40}(E)	72	#4	19'-1"	
a_{41}(E)	90	#5	27'-8"	
a_{42}(E)	96	#6	7'-11"	
a_{43}(E)	72	#4	20'-4"	
a_{44}(E)	90	#5	29'-7"	
a_{45}(E)	180	#5	9'-0"	
b_{40}(E)	40	#4	29'-8"	
b_{41}(E)	228	#9	30'-0"	
b_{42}(E)	41	#4	29'-6"	
d_{40}(E)	132	#5	5'-7"	
d_{41}(E)	66	#5	7'-11"	
d_{42}(E)	66	#5	4'-5"	
e_{40}(E)	8	#4	29'-7"	
e_{41}(E)	1	#8	29'-7"	
e_{42}(E)	8	#4	29'-10"	
e_{43}(E)	1	#8	29'10"	
e_{44}(E)	8	#4	29'-6"	
e_{45}(E)	1	#8	29'-6"	
e_{46}(E)	8	#4	30'-0"	
e_{47}(E)	1	#8	30'-0"	
h_{40}(E)	2	#4	29'-10"	
h_{41}(E)	2	#4	29'-8"	
h_{42}(E)	2	#4	29'-6"	
h_{43}(E)	2	#4	30'-0"	
t_{40}(E)	92	#4	10'-2"	
t_{41}(E)	92	#4	11'-2"	
w_{40}(E)	80	#5	25'-0"	
w_{41}(E)	80	#5	27'-3"	
Concrete Structures			Cu. Yd.	30.5
Concrete Superstructure			Cu. Yd.	156.7
Bridge Deck Grooving			Sq. Yd.	252
Protective Coat			Sq. Yd.	364
Reinforcement Bars, Epoxy Coated			Pound	43,360

Bars indicated thus 1 x 3-#8 etc. indicates 1 line of bars with 3 lengths per line.

Hatched area to be poured after supstructure false work has been removed. See Abutment Sheets S13 thru S15.

* Core and set #5 d42(E) bars according to Article 509.06 of the Standard Specifications. Cored holes shall be roughened or scored per manufacturer's recommendations. Maximum depth of the hole shall not exceed 6".

** Cost included with Concrete Superstructure.

Notes:
Approach slab and parapet concrete shall be paid for as Concrete Superstructure.
Approach footing concrete shall be paid for as Concrete Structures.
Reinforcement shall be paid for as Reinforcement Bars, Epoxy Coated.
The approach footing maximum applied service bearing pressure (Qmax) = 2.0 ksf.
For bar splicer details, see sheet S25.
Cost of excavation for approach footing included with Concrete Structures.

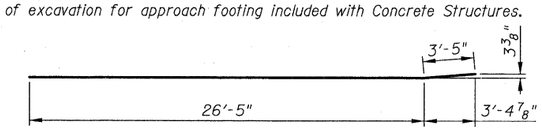

BAR h40(E)

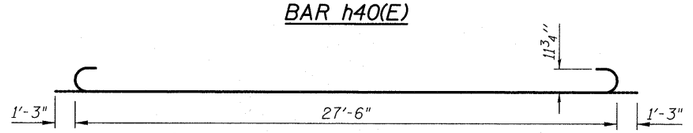

BAR b41(E)

CIVILTECH
450 E Devon Ave, Suite 300
Itasca, Illinois 60143
Tel: 630.773.3900 Fax: 630.773.3975
www.civiltechinc.com

DESIGNED	D. Atkins	REVISED	-
DRAWN	D. Atkins	REVISED	-
CHECKED	G. Hatlestad	REVISED	-
DATE	March 25, 2011	REVISED	-

STATE OF ILLINOIS
DEPARTMENT OF TRANSPORTATION

BRIDGE APPROACH SLAB DETAILS II
UMBDENSTOCK ROAD OVER CC&P RR
STRUCTURE NO. 045-3162
SHEET NO. S23 OF S28 SHEETS

F.A.P. RTE.	SECTION	COUNTY	TOTAL SHEETS	SHEET NO.
361	06-00214-27-BR	KANE	87	56
		CONTRACT NO. 63595		
FED. ROAD DISTRICT 1	ILLINOIS	FED. AID PROJECT		

J:\2372\cad\struct\23_Bridge Appr Slab Details II.dgn
4:16:53 PM
3/24/2011
mfl

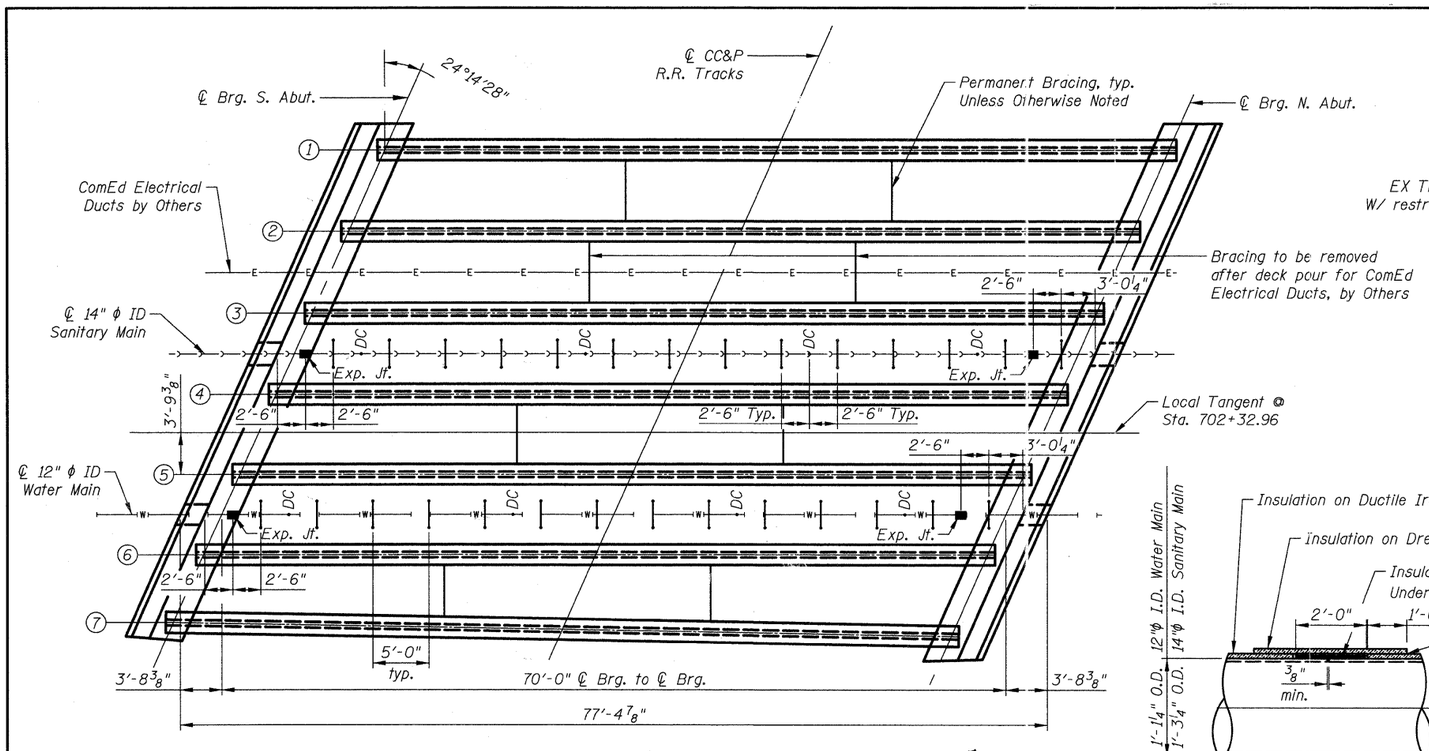

PLAN

LEGEND

- DC - Indicates Dresser Coupling
- —— - Indicates Hanger Support
- ■ Exp. Jt - Indicates Expansion Joint

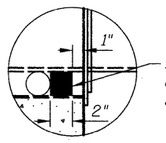

Seal annular space between the main and its casing with tremco dymeric sealant or equal. Provide backer rod. Typical all around both ends.

DETAIL A

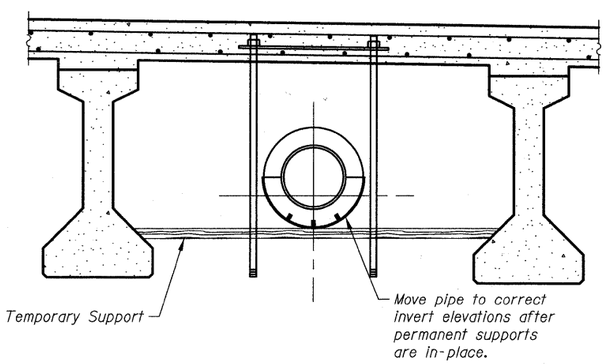

TEMPORARY SUPPORT

Contractor to provide temporary support for the Ultities until the concrete deck has cured. The analysis and calculations shall be submitted to the Engineer for approval. Temporary Support costs shall be included in the cost of the roadway pay items Water Main Casing Pipe and Sanitary Casing Pipe.

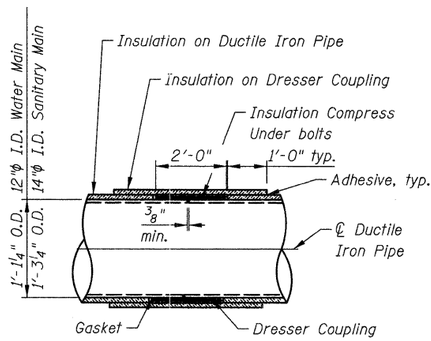

WATER MAIN JOINT AND INSULATION DETAIL

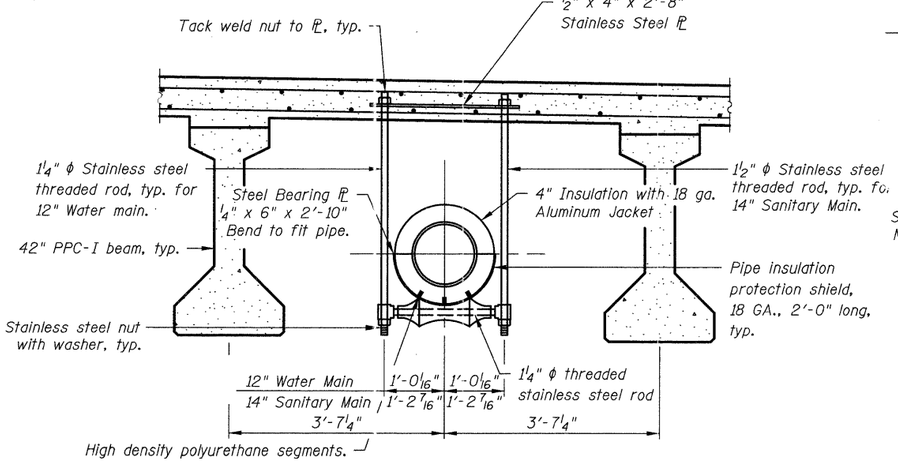

STAINLESS STEEL TWO ROD ROLLER HANGER

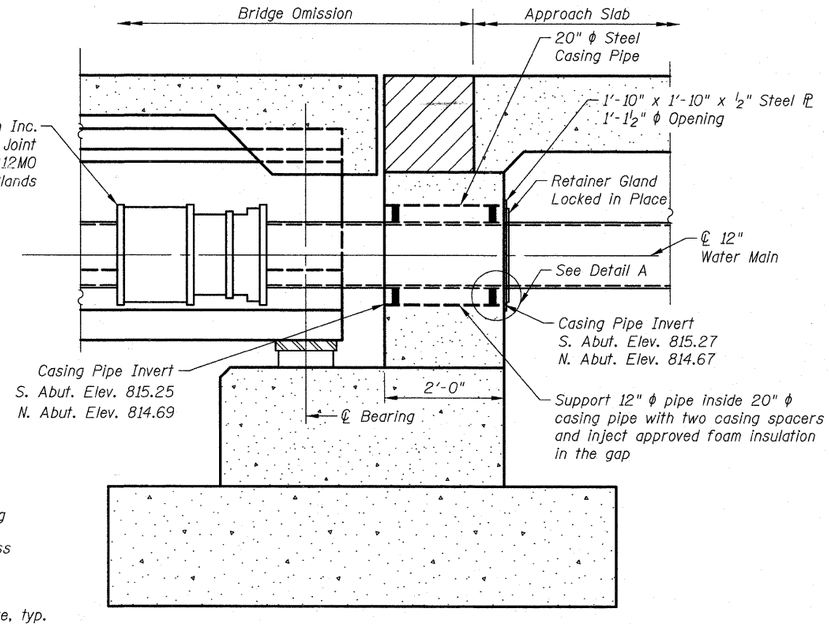

12" WATER MAIN DETAILS AT ABUTMENTS

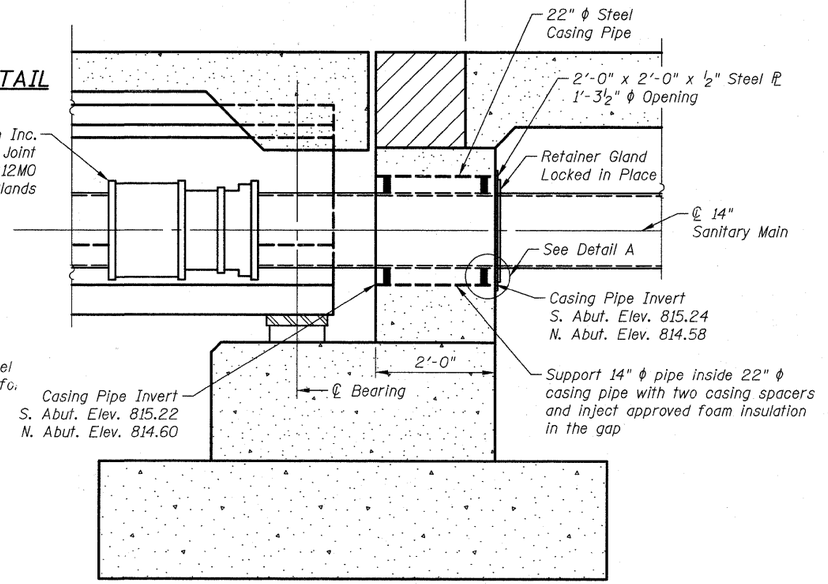

14" SANITARY MAIN DETAILS AT ABUTMENTS

Notes:
Furnishing and installing of Utility Hangers included in roadway pay items Water Main Casing Pipe and Sanitary Sewer Casing Pipe.

Hatched area to be poured after superstructure false work has been removed. See Abutment Sheets S13 thru S15.

CIVILTECH
450 E Devon Ave, Suite 300
Itasca, Illinois 60143
Tel: 630.773.3900 Fax: 630.773.3975
www.civiltechinc.com

DESIGNED - D. Atkins	REVISED -	
DRAWN - D. Atkins	REVISED -	
CHECKED - G. Hatlestad	REVISED -	
DATE - March 25, 2011	REVISED -	

STATE OF ILLINOIS
DEPARTMENT OF TRANSPORTATION

UTILITY HANGER DETAILS
UMBDENSTOCK ROAD OVER CC&P RR
STRUCTURE NO. 045-3162
SHEET NO. S24 OF S28 SHEETS

F.A.P. RTE.	SECTION	COUNTY	TOTAL SHEETS	SHEET NO.
361	06-00214-27-BR	KANE	87	57
		CONTRACT NO. 63595		
FED. ROAD DISTRICT 1	ILLINOIS	FED. AID PROJECT		

mfi 3/24/2011 4:16:55 PM J:\2372\cadd\struct\24_Utility Hanger Details.dgn

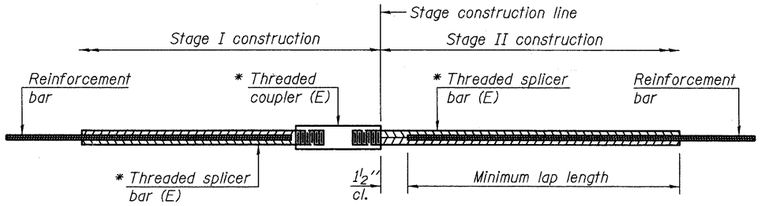

STANDARD BAR SPLICER ASSEMBLY

Minimum Lap Lengths					
Bar size to be spliced	Table 1	Table 2	Table 3	Table 4	Table 5
3, 4	1'-5"	1'-11"	2'-1"	2'-4"	2'-3"
5	1'-9"	2'-5"	2'-7"	2'-11"	2'-10"
6	2'-1"	2'-11"	3'-1"	3'-6"	3'-4"
7	2'-9"	3'-10"	4'-2"	4'-8"	4'-6"
8	3'-8"	5'-1"	5'-5"	6'-2"	5'-10"
9	4'-7"	6'-5"	6'-10"	7'-9"	7'-5"

Table 1: Black bar, 0.8 Class C
Table 2: Black bar, Top bar lap, 0.8 Class C
Table 3: Epoxy bar, 0.8 Class C
Table 4: Epoxy bar, Top bar lap, 0.8 Class C
Table 5: Epoxy bar, Top bar lap, Class B

Threaded splicer bar length = min. lap length + 1½" + thread length

* Epoxy not required on Bar Splicer Assembly components used in conjunction with black bars.

Location	Bar size	No. assemblies required	Table for minimum lap length

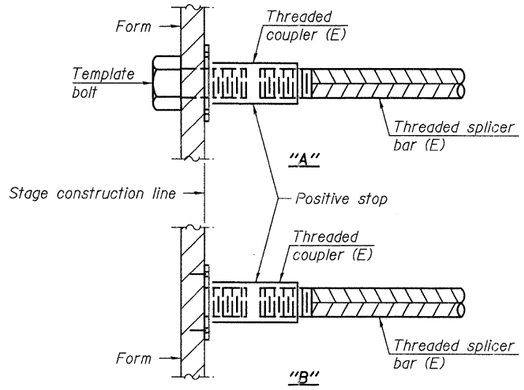

INSTALLATION AND SETTING METHODS

"A" : Set bar splicer assembly by means of a template bolt.
"B" : Set bar splicer assembly by nailing to wood forms or cementing to steel forms.
(E) : Indicates epoxy coating.

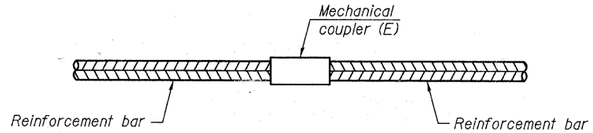

STANDARD MECHANICAL SPLICER

Location	Bar size	No. assemblies required

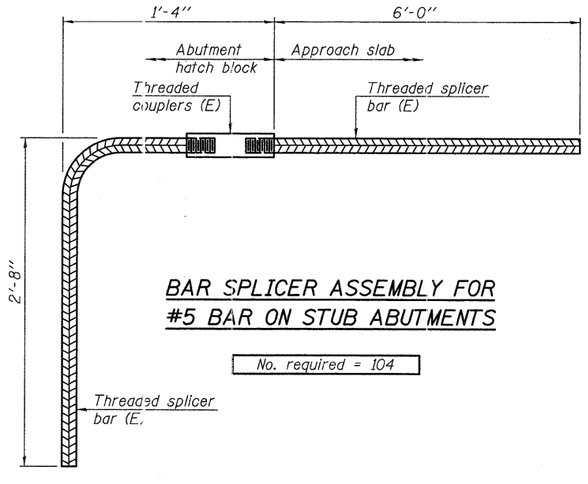

BAR SPLICER ASSEMBLY FOR #5 BAR ON STUB ABUTMENTS

No. required = 104

NOTES

Splicer bars shall be deformed with threaded ends and have a minimum 60 ksi yield strength.

All reinforcement shall be lapped and tied to the splicer bars.

Bar splicer assemblies shall be epoxy coated according to the requirements for reinforcement bars. See Section 508 of the Standard Specifications.

See special provision for Mechanical Splicers.

See approved list of bar splicer assemblies and mechanical splicers for alternatives.

BSD-1 7-1-10

CIVILTECH
450 E Devon Ave, Suite 300
Itasca, Illinois 60143
Tel: 630.773.3900 Fax: 630.773.3975
www.civiltechinc.com

DESIGNED - D. Atkins	REVISED -	
DRAWN - D. Atkins	REVISED -	
CHECKED - G. Hatlestad	REVISED -	
DATE - March 25, 2011	REVISED -	

STATE OF ILLINOIS
DEPARTMENT OF TRANSPORTATION

BAR SPLICER ASSEMBLY AND MECHANICAL SPLICER DETAILS
UMBDENSTOCK ROAD OVER CC&P RR
STRUCTURE NO. 045-3162
SHEET NO. S25 OF S28 SHEETS

F.A.P. RTE.	SECTION	COUNTY	TOTAL SHEETS	SHEET NO.
361	06-00214-27-BR	KANE	87	58
		CONTRACT NO. 63595		
FED. ROAD DISTRICT 1	ILLINOIS	FED. AID PROJECT		

mfi 3/24/2011 4:16:56 PM J:\2372\cad\struct\25_Bar Splicer.dgn

ILLINOIS DEPARTMENT OF TRANSPORTATION
Testing Service Corporation
STRUCTURE BORING LOG

Date Started 9/7/04
Date Completed 9/7/04

ROUTE _____ DESCRIPTION Umbdenstock Road over CC & P Railroad

SECT. 98-00214-02-BR STRUCT. NO. 045-3162 DRILLED BY TSC L-60,393

COUNTY Kane LOCATION SW Corner of S. Approach S. 4 - North , TWP. 40 N , RNG. 8 E

Boring No. UMCN-1
Station 701+37
Offset 16.70ft LT
Surface Elev. 808.20 ft

Surface Water Elev. _____
Groundwater Elev.:
when drilling Dry
at Completion Dry
after _____ Hrs. _____

DEPTH	BLOWS	Qu tsf	W %	DEPTH	BLOWS	Qu tsf	W %
FILL - Crushed Stone Boulders 807.00							
FILL - Dark brown and gray CLAY, moist A-6 805.20	2 3 4	P 2.5	21.6	(Qp = 3.0 tsf)	4 7 8	B 1.9 15%	22.2
Very stiff brown and gray sandy CLAY, trace gravel, trace root seams, moist A-4/A-6 802.70	4 5 6	P 3.5	12.4	(Qp = 2.5 tsf)	6 7 7	B 1.9 15%	20.8
Medium dense brown SAND and GRAVEL, damp A-1-a 800.20	4 8 10		6.6	Stiff to very stiff gray CLAY, trace gravel, moist A-6			
Loose brown and gray fine SAND, damp A-3 799.20	4 5 6	B 3.5 15%	6.0 18.9		4 5 8	B 2.6 15%	21.9
Very stiff brown and gray CLAY, moist A-6 797.70							
	4 5 7	B 3.9 15%	14.4	771.20			
Very stiff to hard gray CLAY, trace gravel, moist A-6	5 6 10	B 4.7 15%	16.0	Stiff gray CLAY with gravel, moist A-6	11 11 12	B 1.6 15%	19.2
	5 7 11	B 3.8 15%	18.4	766.20			
790.20				Medium dense brownish-gray silty fine SAND, trace gravel, moist A-1-b	5 7 8		12.6
(Qp = 3.75 tsf)	5 8 8	B 2.3 15%	18.4				
Very stiff gray CLAY, trace gravel, moist A-6	5 8 11	B 3.5 15%	18.6	761.20			
				Hard brownish-gray CLAY, trace gravel, moist A-6			
783.20	2 5 7	B 2.3 15%	21.0	758.20	6 9 12	B 4.2 15%	11.4

SPT. (N) = Sum of last two blow values in sample. (Qu) B=Bulge S=Shear P=Penetration Test
Stations, Depths, Offset, and Elevations are in Feet

ILLINOIS DEPARTMENT OF TRANSPORTATION
Testing Service Corporation
STRUCTURE BORING LOG

Date Started 9/7/04
Date Completed 9/7/04

STRUCTURE NO. 045-3162
ROUTE _____
SECTION 98-00214-02-BR
COUNTY Kane

Boring No. UMCN-1
Station 701+37
Offset 16.70ft LT
Elevation 758.20 ft

DEPTH	BLOWS	Qu tsf	W %
	10 13 20	B 4.3 15%	10.3
Hard to very hard brownish-gray CLAY, trace gravel, moist to damp A-6			
	15 16 20	B 6.0 15%	10.4
	8 16 22	B 10.3 15%	8.2
743.20			
End of Boring at 65.0'			
CME 750 ATV Drill Rig (#53) CME Automatic Hammer			
3.25" (83 mm) ID HSA			

SPT. (N) = Sum of last two blow values in sample. (Qu) B=Bulge S=Shear P=Penetration Test
Stations, Depths, Offset, and Elevations are in Feet

ILLINOIS DEPARTMENT OF TRANSPORTATION
Testing Service Corporation
STRUCTURE BORING LOG

Date Started 9/7/04
Date Completed 9/7/04

ROUTE _____ DESCRIPTION Umbdenstock Road over CC & P Railroad

SECT. 98-00214-02-BR STRUCT. NO. 045-3162 DRILLED BY TSC L-60,393

COUNTY Kane LOCATION NE Corner of N. Approach S. 4 - North , TWP. 40 N , RNG. 8 E

Boring No. UMCN-2
Station 703+42
Offset 24.00ft RT
Surface Elev. 814.61 ft

Surface Water Elev. _____
Groundwater Elev.:
when drilling Dry
at Completion Dry
after _____ Hrs. _____

DEPTH	BLOWS	Qu tsf	W %	DEPTH	BLOWS	Qu tsf	W %
FILL - Black clayey Topsoil and dark brown CLAY, moist A-6/A-7-6 812.11	3 3 3	P 2.75	22.9	Hard brownish-gray CLAY, moist A-6	6 10 12	B 4.5 15%	19.0
				786.61			
Very stiff brown CLAY, moist A-6 809.11	2 3 5	B 3.9 15%	18.0		4 5 6	B 2.6 15%	20.1
Medium dense brown SAND and GRAVEL, damp A-1-a 806.61	4 6 13		3.8	Very stiff gray CLAY, trace gravel, moist A-6			
	14 18 22		5.8	CME 750 ATV Drill Rig (#53) CME Automatic Hammer	3 6 8	B 2.3 15%	21.3
Dense brown SAND and GRAVEL, damp A-1-a	6 29 22		4.4	3.25" (83 mm) ID HSA			
801.61				777.61			
	10 9 8		4.9	(Qp = 1.75 tsf)	4 5 6	B 1.0 15%	14.5
Medium dense brown SAND and GRAVEL, damp A-1-a	6 8 13		5.1	Stiff brownish-gray CLAY LOAM, occasional sand seams, moist A-6			
796.61				772.61			
Hard gray CLAY, trace gravel, moist A-6	8 13 16	B 5.4 15%	17.2	(Qp = 4.5 tsf)	22 12 8	B 3.0 15%	10.7
	7 9 13	B 5.2 15%	18.2	Very stiff to hard dark brown and gray CLAY, trace to little gravel, occasional Cobbles, moist A-6			
791.61				766.61			
Very stiff brownish-gray CLAY, moist A-6 789.61	6 9 12	B 3.5 15%	19.8	Probable Boulder 765.61		10071"	
				Auger Refusal at 49.0'			

SPT. (N) = Sum of last two blow values in sample. (Qu) B=Bulge S=Shear P=Penetration Test
Stations, Depths, Offset, and Elevations are in Feet

CIVILTECH
450 E Devon Ave, Suite 300
Itasca, Illinois 60143
Tel: 630.773.3900 Fax: 630.773.3975
www.civiltechinc.com

DESIGNED - D. Atkins	REVISED -	
DRAWN - D. Atkins	REVISED -	
CHECKED - G. Hatlestad	REVISED -	
DATE - March 25, 2011	REVISED -	

STATE OF ILLINOIS
DEPARTMENT OF TRANSPORTATION

BORING LOGS I
UMBDENSTOCK ROAD OVER CC&P RR
STRUCTURE NO. 045-3162
SHEET NO. S26 OF S28 SHEETS

F.A.P. RTE.	SECTION	COUNTY	TOTAL SHEETS	SHEET NO.
361	06-00214-27-BR	KANE	87	59
		CONTRACT NO. 63595		
FED. ROAD DISTRICT 1	ILLINOIS	FED. AID PROJECT		

J:\2372\cad\struct\26_Boring Logs_ldgn
4:16:57 PM
mfl
3/24/2011

ILLINOIS DEPARTMENT OF TRANSPORTATION
Testing Service Corporation
STRUCTURE BORING LOG

Page 1 of 1
Date Started 6/10/05
Date Completed 6/10/05

ROUTE _____ DESCRIPTION Umbdenstock Road over CC & P Railroad

SECT. 98-00214-02-BR STRUCT. NO. 045-3162 DRILLED BY TSC L-60,393

COUNTY Kane LOCATION East End South Abutment S. 4 - North , TWP. 40 N , RNG. 8 E

Boring No. UMCN-3
Station 701+94
Offset 19.00ft RT
Surface Elev. 789.34 ft

Surface Water Elev. _____
Groundwater Elev.:
when drilling Dry
at Completion Dry
after _____ Hrs. _____

	DEPTH	BLOWS	Qu tsf	W %
FILL - Brown SANDY LOAM with Gravel 788.84 / FILL - Black clayey Topsoil 788.14		6 8 14	P 1.25	28.8
FILL - Brown and dark gray CLAY LOAM, trace organic, very moist A-6 785.84		HA	B 2.8	21.9
Very stiff brownish-gray CLAY, moist A-6 783.84	-5	HA	B 2.4 15%	21.5
Very stiff gray CLAY, trace gravel, moist A-6 778.84		HA	B 2.6 15%	21.6
Stiff gray CLAY, trace gravel, moist to very moist A-6	-10	HA	B 1.1 15%	22.0
(Qp=1.25 tsf) 774.34	-15	HA	B 1.0 15%	21.6
End of Boring at 15 feet				
HA - Boring performed by hand auger methods. Samples taken with split-spoon sampler.	-20			
	-25			

ILDOT_BORING 6SEP06.GPJ ILDOT.GDT 6/14/06

SPT. (N) = Sum of last two blow values in sample. (Qu) B=Bulge S=Shear P=Penetration Test
Stations, Depths, Offset, and Elevations are in Feet

ILLINOIS DEPARTMENT OF TRANSPORTATION
Testing Service Corporation
STRUCTURE BORING LOG

Page 1 of
Date Started 6/10/05
Date Completed 6/10/05

ROUTE _____ DESCRIPTION Umbdenstock Road over CC & P Railroad

SECT. 98-00214-02-BR STRUCT. NO. 045-3162 DRILLED BY TSC L-60,393

COUNTY Kane LOCATION West End North Abutment S. 4 - North , TWP. 40 N , RNG. 8 E

Boring No. UMCN-4
Station 702+10
Offset 17.00ft LT
Surface Elev. 788.10 ft

Surface Water Elev. _____
Groundwater Elev.:
when drilling Dry
at Completion Dry
after _____ Hrs. _____

	DEPTH	BLOWS	Qu tsf	W %
FILL - Brown and dark brown CLAY LOAM with Gravel, trace organic, very moist A-6/A-6 784.60		4 4 4	B 0.4 15%	23.2
Very stiff gray CLAY, trace gravel, moist A-6 (disturbed sample) 782.60	-5		P 2.25	21.8
Stiff gray CLAY, trace gravel, moist A-6		HA	B 1.5 15%	20.8
(Qp=2.0 tsf)	-10	HA	B 1.6 15%	22.4
		HA	B 1.6 15%	20.6
773.10	-15	HA	B 1.6 15%	20.8
End of Boring at 15 feet				
HA = Boring performed by hand auger methods. Samples taken with split-spoon sampler.	-20			
	-25			

ILDOT_BORING 6SEP06.GPJ ILDOT.GDT 6/14/06

SPT. (N) = Sum of last two blow values in sample. (Qu) B=Bulge S=Shear P=Penetration Test
Stations, Depths, Offset, and Elevations are in Feet

ILLINOIS DEPARTMENT OF TRANSPORTATION
Testing Service Corporation
STRUCTURE BORING LOG

Page 1 of
Date Started 6/8/06
Date Completed 6/8/06

ROUTE _____ DESCRIPTION Umbdenstock Road over CC & P Railroad

SECT. 98-00214-02-BR STRUCT. NO. 045-3162 DRILLED BY TSC L-60,393

COUNTY Kane LOCATION East End North Abutment S. 4 - North , TWP. 40 N , RNG. 8 E

Boring No. UMCN-5
Station 702+34
Offset 19.00ft RT
Surface Elev. 790.61 ft

Surface Water Elev. _____
Groundwater Elev.:
when drilling 788.6
at Completion Dry
after _____ Hrs. _____

	DEPTH	BLOWS	Qu tsf	W %
FILL - Black CLAY LOAM, some brown clay, moist A-6 789.11			P 1.5	24.2
FILL - Brown CLAY, trace brick fragments, very moist A-6/A-7-6 786.11			P 0.25	34.9
Very stiff brownish-gray CLAY, trace gravel, moist A-6 784.61	-5		B 2.2 15%	21.6
			B 1.9 15%	20.9
			B 2.3 15%	22.2
Very stiff to stiff gray CLAY, trace gravel, moist A-6	-10		B 2.2 15%	23.3
			B 1.7 15%	23.4
	-15		B 1.8 15%	23.2
773.61			B 1.7 15%	21.3
Stiff gray CLAY and CLAY LOAM, occasional sand seams, moist A-6	-20		B 1.8 15%	13.2
768.11			B 1.7 15%	21.8
Very stiff brownish-gray SILTY LOAM, occ. sand seams, moist A-4 766.61			P 2.75	11.1
SILTY LOAM & SANDY LOAM 765.61	-25		P 1.5	10.0

	DEPTH	BLOWS	Qu tsf	W %
Very stiff brownish-gray SILTY LOAM and SANDY LOAM, moist A-4 762.61				9.7
Hard reddish-gray CLAY LOAM, trace gravel, moist A-6	-30		P 4.0	14.1
758.61			P 4.5	10.5
End of Boring at 32.0 feet				
Sampling Method: Continuous Macro-core samples (1.5" diam.) using ATV GeoProbe rig	-35			
	-40			
	-45			
	-50			

ILDOT_BORING 6SEP06.GPJ ILDOT.GDT 6/14/06

SPT. (N) = Sum of last two blow values in sample. (Qu) B=Bulge S=Shear P=Penetration Test
Stations, Depths, Offset, and Elevations are in Feet

CIVILTECH
450 E Devon Ave, Suite 300
Itasca, Illinois 60143
Tel: 630.773.3900 Fax: 630.773.3975
www.civiltechinc.com

DESIGNED	D. Atkins	REVISED -
DRAWN	D. Atkins	REVISED -
CHECKED	G. Hatlestad	REVISED -
DATE	March 25, 2011	REVISED -

STATE OF ILLINOIS
DEPARTMENT OF TRANSPORTATION

BORING LOGS II
UMBDENSTOCK ROAD OVER CC&P RR
STRUCTURE NO. 045-3162
SHEET NO. S27 OF S28 SHEETS

F.A.P. RTE.	SECTION	COUNTY	TOTAL SHEETS	SHEET NO.
361	06-00214-27-BR	KANE	87	60
		CONTRACT NO. 63595		
FED. ROAD DISTRICT 1	ILLINOIS	FED. AID PROJECT		

mfl 3/24/2011 4:16:59 PM J:\2372\cad\struct\27-Boring Logs II.dgn

ILLINOIS DEPARTMENT OF TRANSPORTATION
Testing Service Corporation
STRUCTURE BORING LOG

Page 1 of 1

Date Started 6/8/06
Date Completed 6/8/06

ROUTE _____ DESCRIPTION Umbdenstock Road over CC & P Railroad

SECT. 98-00214-02-BR STRUCT. NO. 045-3162 DRILLED BY TSC L-60,393

COUNTY Kane LOCATION West End South Abutment S. 4 - North , TWP. 40 N , RNG. 8 E

Boring No. UMCN-6
Station 702+05
Offset 19.00ft LT
Surface Elev. 788.04 ft

Surface Water Elev. _____
Groundwater Elev.:
when drilling Dry
at Completion Dry
after _____ Hrs. _____

Description	Elev.	DEPTH	BLOWS	Qu tsf	W %
FILL - Brown CLAY LOAM, little black topsoil, very moist A-6	785.04			B 1.0 15%	24.5
				B 3.8 15%	14.9
Very stiff brown CLAY, moist A-6	782.04	-5		B 3.2 15%	16.8
Stiff to very stiff gray and brown CLAY occasional silt seams, moist A-6	779.54			S 1.3 12%	21.9
		-10		B 2.1 15%	22.7
				B 1.7 15%	21.5
				B 1.8 15%	21.0
Stiff gray CLAY, trace gravel, moist A-6		-15		B 1.6 15%	22.5
				B 1.3 15%	22.5
		-20		B 1.9 15%	21.5
	765.04			B 1.5 15%	21.1
Stiff to very stiff gray CLAY, moist A-6	763.04	-25		B 2.0 15%	18.1
				B 2.4	21.9

Description	Elev.	DEPTH	BLOWS	Qu tsf	W %
Brownish-gray clayey SAND, trace gravel, moist A-2-4	760.04				11.4
Stiff to very stiff reddish-gray CLAY LOAM, moist A-6	758.04	-30		B 1.5 15%	13.0
Hard reddish-gray CLAY LOAM, trace gravel, moist A-6	756.04			B 4.9 15%	10.9
End of Boring at 32.0 feet					
Sampling Method: Continuous Macro-core samples (1.5" diam.) using ATV GeoProbe rig		-35			
		-40			
		-45			
		-50			

SPT. (N) = Sum of last two blow values in sample. (Qu) B=Bulge S=Shear P=Penetration Test
Stations, Depths, Offset, and Elevations are in Feet

ILOOT_BORING 8/3/02.GPJ IDOT.GDT 6/13/06

J:\2372\cad\struct\28_Boring Logs III.dgn 4:17:08 PM 3/24/2011

CIVILTECH
450 E Devon Ave, Suite 300
Itasca, Illinois 60143
Tel: 630.773.3900 Fax: 630.773.3975
www.civiltechinc.com

DESIGNED	- D. Atkins	REVISED	-
DRAWN	- D. Atkins	REVISED	-
CHECKED	- G. Hatlestad	REVISED	-
DATE	- March 25, 2011	REVISED	-

STATE OF ILLINOIS
DEPARTMENT OF TRANSPORTATION

BORING LOGS III
UMBDENSTOCK ROAD OVER CC&P RR
STRUCTURE NO. 045-3162
SHEET NO. S28 OF S28 SHEETS

F.A.P. RTE.	SECTION	COUNTY	TOTAL SHEETS	SHEET NO.
361	06-00214-27-BR	KANE	87	61
		CONTRACT NO. 63595		
FED. ROAD DISTRICT 1	ILLINOIS	FED. AID PROJECT		

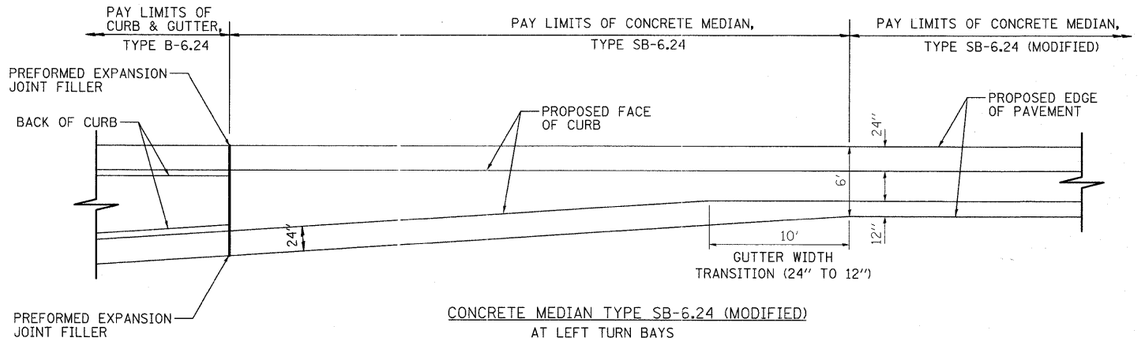

CONCRETE MEDIAN TYPE SB-6.24 (MODIFIED)
AT LEFT TURN BAYS

NOTE: CONCRETE MEDIAN SHALL BE CONSTRUCTED IN ACCORDANCE WITH APPLICABLE PORTIONS OF STANDARD 606301

FINAL SURVEY
NOTE BOOK
NO.
SURVEYED
PLOTTED
TEMPLATE
AREAS
AREAS CHECKED
BY
DATE

ORIGINAL SURVEY
NOTE BOOK
NO.
SURVEYED
PLOTTED
TEMPLATE
AREAS
AREAS CHECKED
BY
DATE

CIVILTECH
450 E Devon Ave, Suite 300
Itasca, Illinois 60143
Tel: 630.773.3900 Fax: 630.773.3975
www.civiltechinc.com

DESIGNED	- PK	REVISED -
DRAWN	- PK	REVISED -
CHECKED	- RTM	REVISED -
DATE	- 3/25/2011	REVISED -

STATE OF ILLINOIS
DEPARTMENT OF TRANSPORTATION

N.T.S.

ROADWAY CONSTRUCTION DETAILS

SHEET NO. 1 OF 3 SHEETS

F.A.P. RTE.	SECTION	COUNTY	TOTAL SHEETS	SHEET NO.
361	06-00214-27-BR	KANE	87	62
		CONTRACT NO. 63595		
FED. ROAD DIST. NO. 1	ILLINOIS	FED. AID PROJECT		

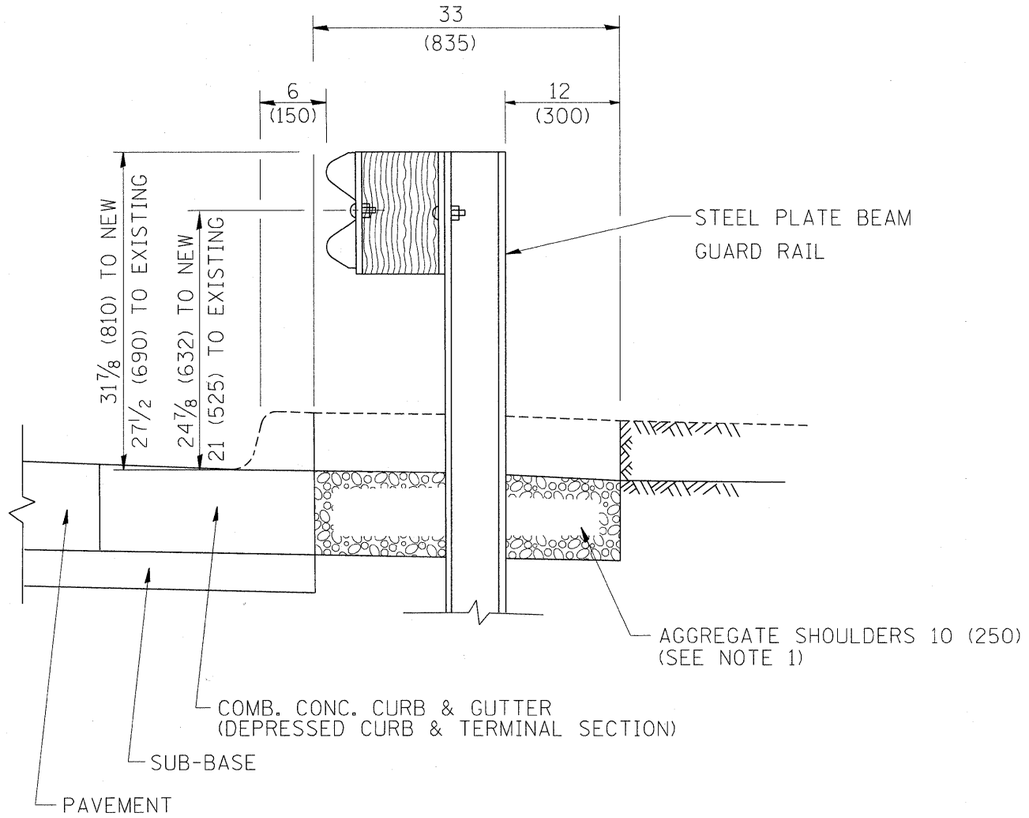

SECTION A-A

NOTES:
1. THE AGGREGATE SHOULDER, 10" OR HMA SHOULDER, 6" (IF REQUIRED) SHALL EXTEND UNDER THE TRAFFIC BARRIER TERMINAL.
2. "EXISTING" GUARDRAIL REFERS TO CONNECTING TERMINAL SECTION TO GUARD RAILING PRIOR TO THE MIDWEST GUARDRAIL SYSTEM.
3. THE CONTRACTOR SHALL VERIFY THE TYPE/HEIGHT OF GUARDRAIL IN-PLACE BEFORE ORDERING THE NEW TERMINAL SECTION. COST INCLUDED WITH THE COST OF THE TERMINAL. THE TERMINAL SECTION HEIGHT TO BE PLACED MUST MATCH THE HEIGHT OF THE IN-PLACE GUARDRAIL.

DETAILS FOR STEEL PLATE BEAM GUARD RAIL ADJACENT TO CURB AND GUTTER [FOR ROADWAY SPEED 35 MPH (60 kmh) TO 45 MPH (70 kmh)]

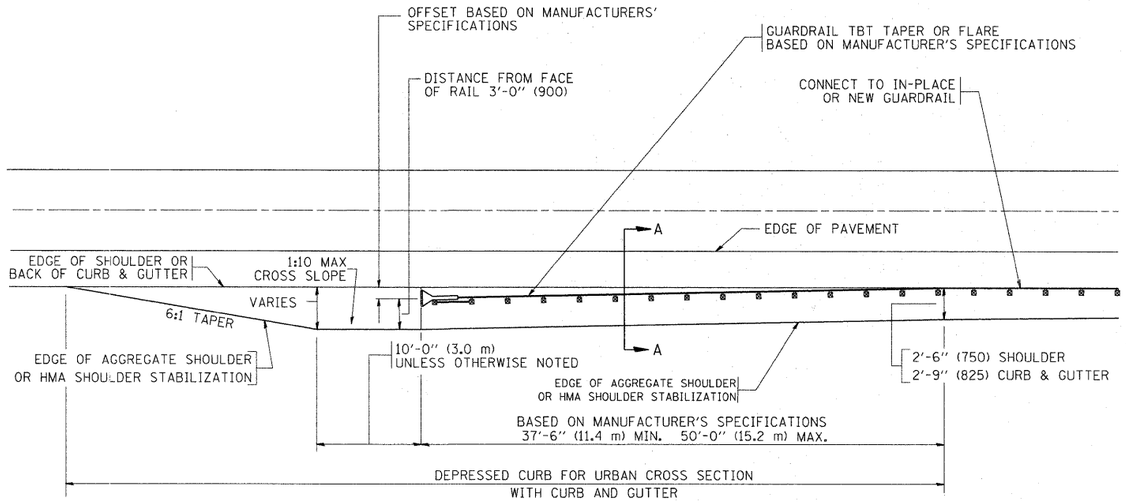

DEPRESSED CURB AND GUTTER AND SHOULDER TREATMENT AT TBT TY. 1 SPL.

BASIS OF PAYMENT: HMA SHOULDERS 6 (150) (IF REQUIRED) WILL BE PAID FOR AT THE CONTRACT UNIT PRICE PER SQUARE YARD (SQUARE METER) FOR "HOT-MIX ASPHALT SHOULDERS 6" (150 mm)".

STEEL PLATE BEAM GUARD RAIL AND TRAFFIC BARRIER TERMINAL, OF THE TYPE SPECIFIED WILL BE PAID FOR SEPARATELY.

TBT = TRAFFIC BARRIER TERMINAL

ALL DIMENSIONS ARE IN INCHES (MILLIMETERS) UNLESS OTHERWISE SHOWN.

FILE NAME = c:\pw_work\PWIDOT\DRIVAKOSGN\d0108315\bd34.dgn	USER NAME = drivakosgn	DESIGNED - M. DE YONG	REVISED - E. GOMEZ 08-28-00
		DRAWN -	REVISED - R. BORO 01-01-07
	PLOT SCALE = 49.9999 ' / IN.	CHECKED -	REVISED - R. BORO 12-08-2008
	PLOT DATE = 9/21/2009	DATE - 09-22-90	REVISED - R. BORO 09-14-2009

STATE OF ILLINOIS
DEPARTMENT OF TRANSPORTATION

DETAILS FOR DEPRESSED CURB & GUTTER AND SHOULDER TREATMENT AT TBT TY 1 SPL.

SCALE: NONE | SHEET NO. 1 OF 1 SHEETS | STA. | TO STA.

F.A. RTE.	SECTION	COUNTY	TOTAL SHEETS	SHEET NO.
361	06-00214-27-BR	KANE	87	63
	BD600-10 (BD 34)	CONTRACT NO. 63595		
FED. ROAD DIST. NO. 1	ILLINOIS	FED. AID PROJECT		

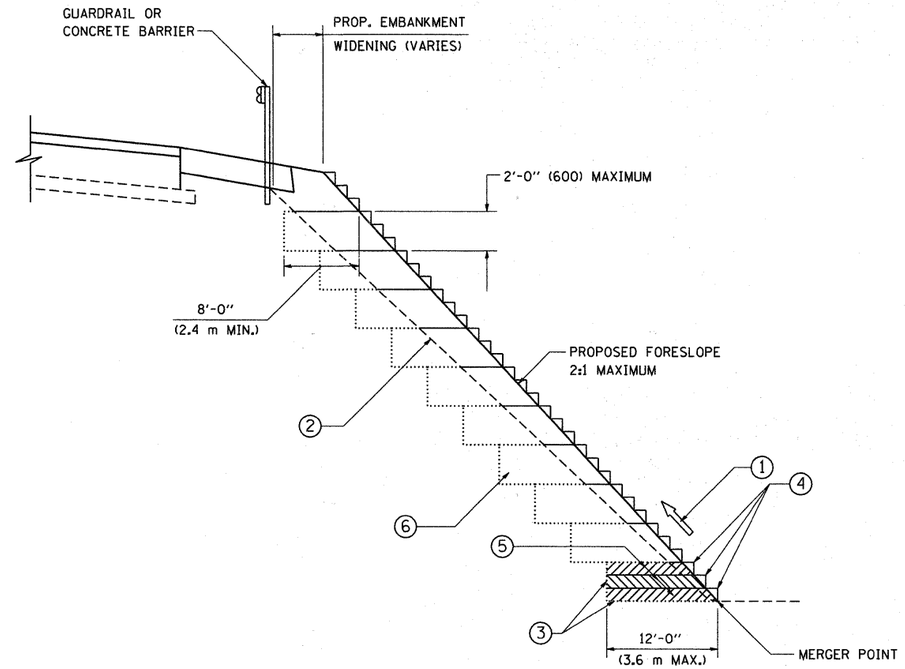

TYPICAL BENCHING DETAIL FOR EMBANKMENT

NOTES:

1. CONSTRUCT SUCCEEDING BENCH CUTS AND EMBANKMENT PLACEMENT AND COMPACTION FROM BOTTOM TO TOP IN STAIRSTEP FASHION.
2. EXISTING FORESLOPE PREPARED IN ACCORDANCE WITH ARTICLE 205.03 OF THE STANDARD SPECIFICATIONS.
3. BENCH CUT EXISTING SLOPE TYPICAL FOR EACH STEP.
4. TRIM TO FINAL SLOPE.
5. EQUAL 8-INCH (200) LIFTS OF EMBANKMENT COMPACTED IN ACCORDANCE WITH ARTICLE 205.05 OF THE STANDARD SPECIFICATIONS.
6. EXCAVATION OF BENCH CUTS WITHIN EXISTING EMBANKMENT WILL BE PAID FOR AT THE CONTRACT UNIT PRICE PER CUBIC METER OR CUBIC YARD FOR "EARTH EXCAVATION". THIS PRICE WILL INCLUDE ALL LABOR AND MATERIAL. NO ADDITIONAL COMPENSATION WILL BE ALLOWED.
7. SLOPES SHALL BE BENCHED ACCORDING TO THIS DETAIL WHEN THE SLOPE IS STEEPER THAN 4:1 AND THE HEIGHT IS GREATER THAN 5' (1.5 m).

ALL DIMENSIONS ARE IN INCHES (MILLIMETERS) UNLESS OTHERWISE SHOWN.

FILE NAME = W:\diststd\22x34\bd51.dgn	USER NAME = gaglionobt	DESIGNED -	REVISED -
		DRAWN - CADD	REVISED -
	PLOT SCALE = 50.0000 ' / IN.	CHECKED - S.E.B.	REVISED -
	PLOT DATE = 1/4/2008	DATE - 06-16-04	REVISED -

STATE OF ILLINOIS
DEPARTMENT OF TRANSPORTATION

BENCHING DETAIL
FOR EMBANKMENT WIDENING

SCALE: NONE | SHEET NO. 1 OF 1 SHEETS | STA. | TO STA.

F.A. RTE.	SECTION	COUNTY	TOTAL SHEETS	SHEET NO.
361	06-00214-27-BR	KANE	87	64
	BD-51	CONTRACT NO. 63595		
FED. ROAD DIST. NO. 1	ILLINOIS	FED. AID PROJECT		

THE USE OF CROSS STREET PAVEMENT SEPARATION JOINTS FOR SKEWED OR LARGE INTERSECTIONS WHERE JOINTS MAY NOT MATCH

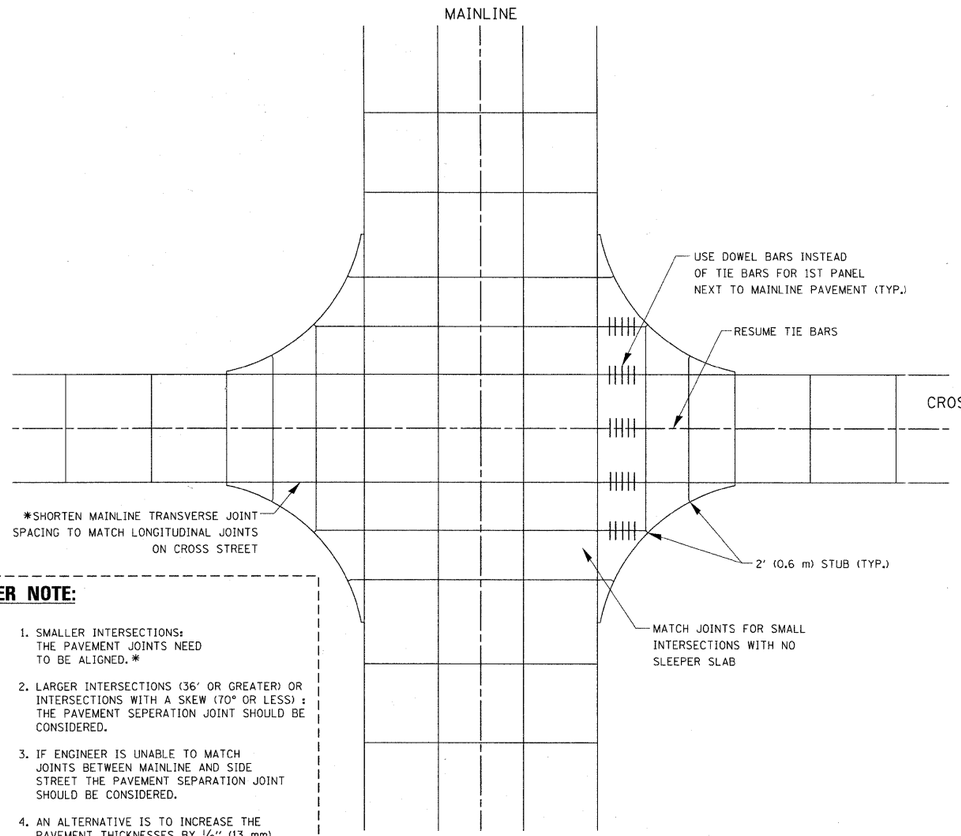

DESIGNER NOTE:

1. SMALLER INTERSECTIONS: THE PAVEMENT JOINTS NEED TO BE ALIGNED.*
2. LARGER INTERSECTIONS (36' OR GREATER) OR INTERSECTIONS WITH A SKEW (70° OR LESS) : THE PAVEMENT SEPERATION JOINT SHOULD BE CONSIDERED.
3. IF ENGINEER IS UNABLE TO MATCH JOINTS BETWEEN MAINLINE AND SIDE STREET THE PAVEMENT SEPARATION JOINT SHOULD BE CONSIDERED.
4. AN ALTERNATIVE IS TO INCREASE THE PAVEMENT THICKNESSES BY ½" (13 mm) FOR THE LENGTH OF THE AFFECTED PANELS AT THE INTERSECTION.
5. FOR LARGE INTERSECTIONS (6 LANES OR MORE) WHERE JOINTS CAN BE MATCHED, USE #8 (25) DOWEL BARS INSTEAD OF #8 (25) TIE BARS AT EDGE OF MAINLINE PAVEMENT WHEN NO PAVEMENT SEPARATION JOINTS USED.

PLAN

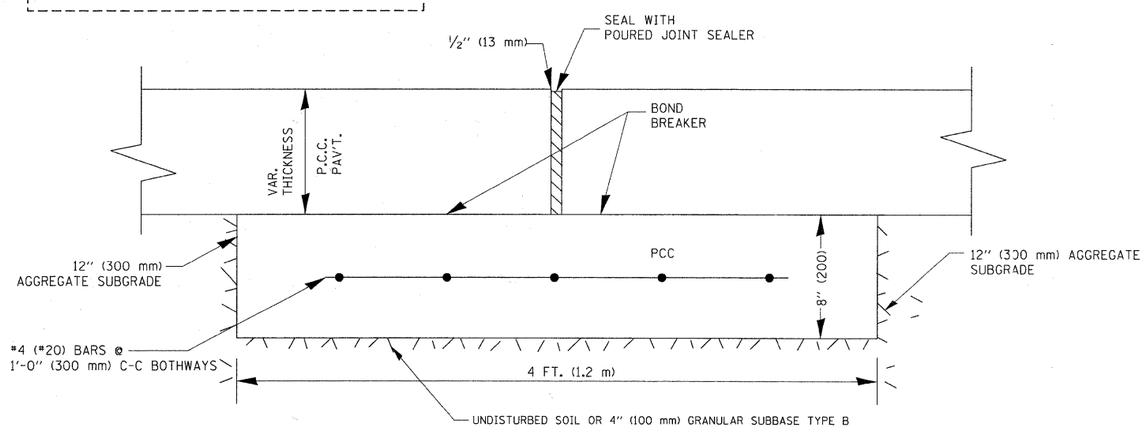

PROPOSED SECTION A-A

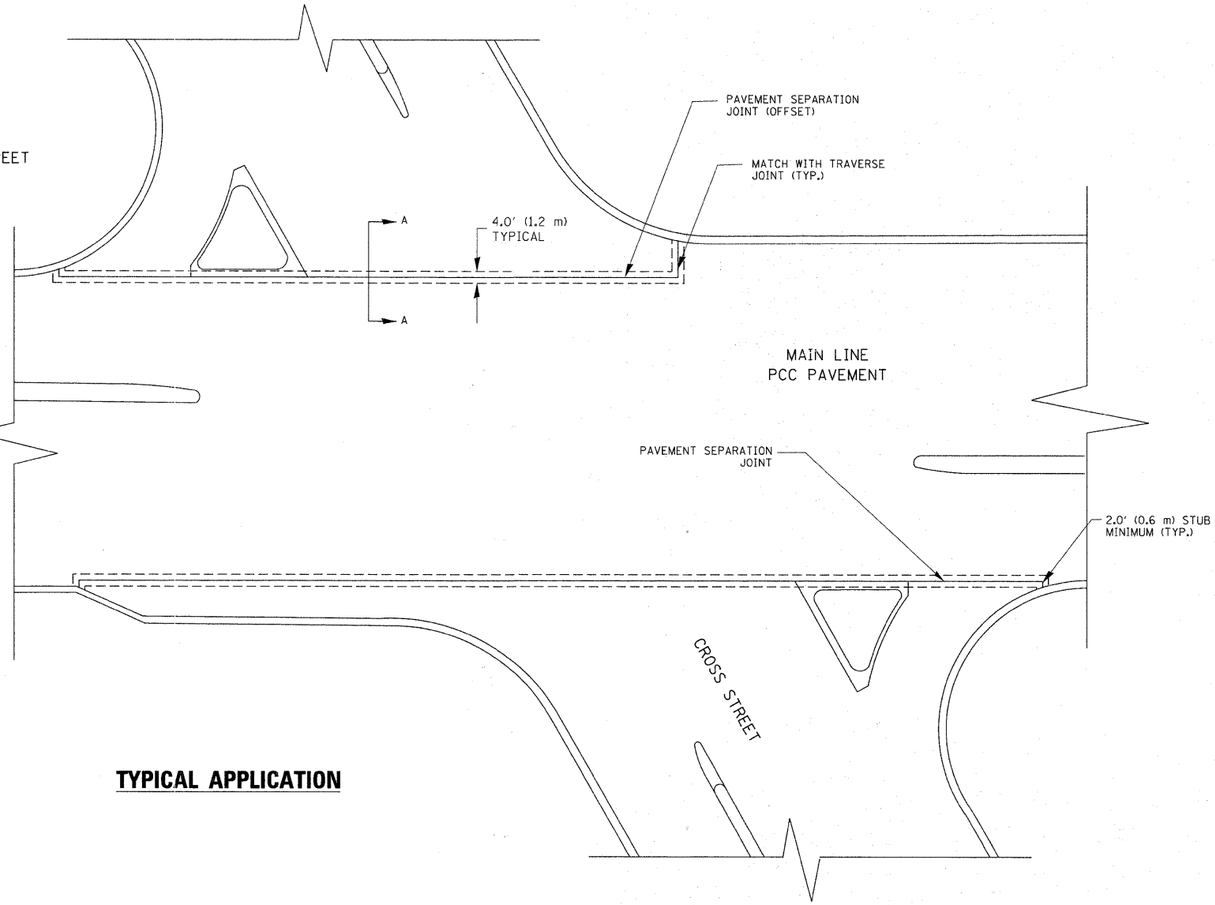

TYPICAL APPLICATION

NOTE:

1. JOINT FILLER SHALL CONSIST OF A SHEET OF ½" (13 mm) BITUMINOUS PREFORMED FIBER JOINT FILLER CONFORMING TO ARTICLE 1051.03 OF THE STANDARD SPECIFICATIONS.
2. THE JOINT SHALL BE SEALED WITH A HOT POUR JOINT SEALER CONFORMING TO ARTICLE 1050.02 OF THE STANDARD SPECIFICATIONS.
3. A SINGLE LAYER OF FELT ROOFING PAPER SHALL SERVE AS A BOND BREAKER.
4. JOINT SHALL CONTINUE THROUGH COMBINATION CURB & GUTTER OR PCC SHOULDER.
5. PAVEMENT SEPARATION JOINT IS TO BE PAID FOR AS "SLEEPER SLAB" AND IS TO BE MEASURED IN PLACE BY THE LINEAL FOOT.
6. BOND BREAKER AND ½" (13 mm) JOINT AND FILLER SHALL BE INCIDENTAL TO THE PAY ITEM "SLEEPER SLAB".

FILE NAME = bd52.dgn	USER NAME = gaglionobt	DESIGNED -	REVISED - CADD 06-18-10
		DRAWN -	REVISED -
	PLOT SCALE = 50.0000 ' / IN.	CHECKED -	REVISED -
	PLOT DATE = 6/18/2010	DATE -	REVISED -

STATE OF ILLINOIS
DEPARTMENT OF TRANSPORTATION

DETAIL OF PAVEMENT SEPARATION JOINT FOR JOINTED PCC PAVEMENTS AT INTERSECTIONS

SCALE: NONE | SHEET NO. 1 OF 1 SHEETS | STA. | TO STA.

F.A. RTE.	SECTION	COUNTY	TOTAL SHEETS	SHEET NO.
361	06-00214-27-BR	KANE	87	65
	BD52	CONTRACT NO. 63595		
	ILLINOIS FED. AID PROJECT			

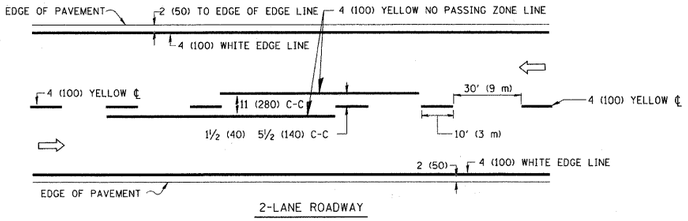

2-LANE ROADWAY

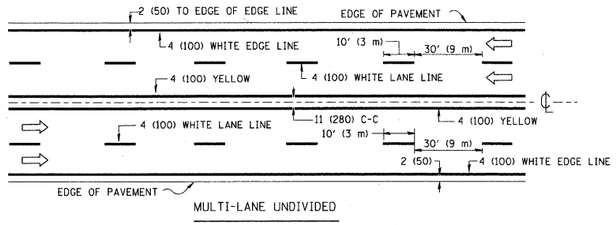

MULTI-LANE UNDIVIDED

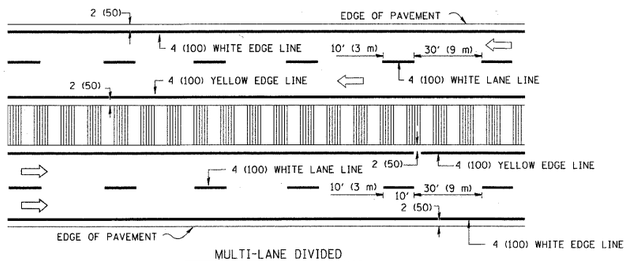

MULTI-LANE DIVIDED
WITH MOUNTABLE MEDIAN

NOTE: MEDIANS WITH BARRIER CURB DO NOT REQUIRE AN EDGE LINE

TYPICAL LANE AND EDGE LINE MARKING

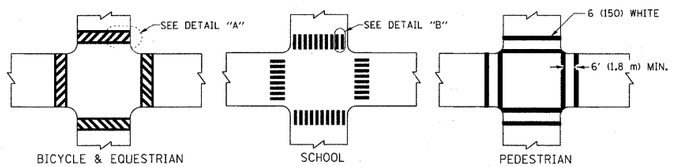

TYPICAL CROSSWALK MARKING

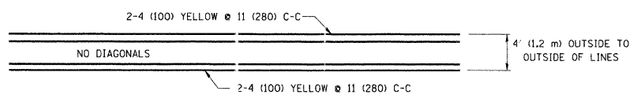

4' (1.2 m) WIDE MEDIANS ONLY

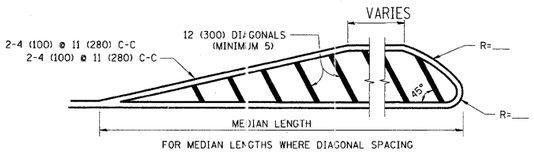

FOR MEDIAN LENGTHS WHERE DIAGONAL SPACING CANNOT BE ATTAINED, USE 5 (FIVE) EQUALLY SPACED DIAGONAL LINES

DIAGONAL LINE SPACING: 50' (15 m) C-C (LESS THAN 30MPH (50 km/h))
75' (25 m) C-C 30MPH (50 km/h) TO 45MPH (70 km/h))
150' (45 m) C-C (MORE THAN 45MPH (70 km/h))

MEDIANS OVER 4' (1.2 m) WIDE

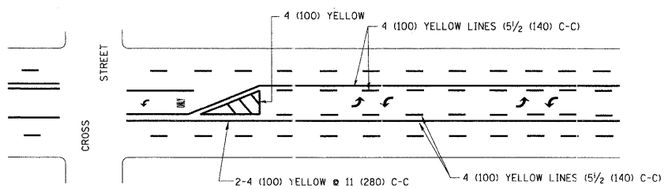

A MINIMUM OF TWO PAIRS OF TURN ARROWS SHALL BE USED, WHITE IN COLOR. ADDITIONAL PAIRS SHALL BE PLACED AT 200' (60 m) TO 300' (90 m) INTERVALS.

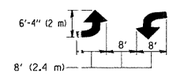

MEDIAN WITH TWO-WAY LEFT TURN LANE

TYPICAL PAINTED MEDIAN MARKING

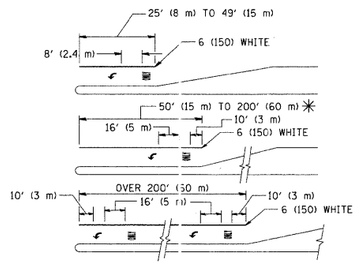

FULL SIZE LETTERS 8' (2.4 m) AND ARROWS SHALL BE USED.
↰ AREA = 15.6 SQ. FT. (1.5 m^2) **ONLY** AREA = 20.8 SQ. FT. (1.9 m^2)

✳ TURN LANES IN EXCESS OF 400' (120 m) IN LENGTH MAY HAVE AN ADDITIONAL SET OF ARROW - "ONLY" INSTALLED MIDWAY BETWEEN THE OTHER TWO SETS OF ARROW - "ONLY".

TYPICAL LEFT (OR RIGHT) TURN LANE

TYPICAL TURN LANE MARKING

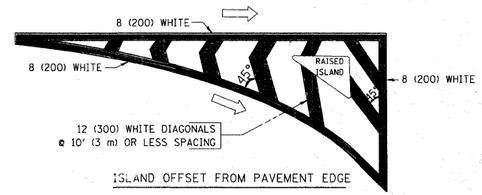

ISLAND OFFSET FROM PAVEMENT EDGE

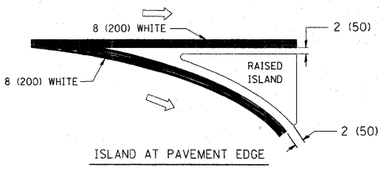

ISLAND AT PAVEMENT EDGE

TYPICAL ISLAND MARKING

TYPE OF MARKING	WIDTH OF LINE	PATTERN	COLOR	SPACING / REMARKS
CENTERLINE ON 2 LANE PAVEMENT	4 (100)	SKIP-DASH	YELLOW	10' (3 m) LINE WITH 30' (9 m) SPACE
CENTERLINE ON MULTI-LANE UNDIVIDED PAVEMENT	2 ø 4 (100)	SOLID	YELLOW	11 (280) C-C
NO PASSING ZONE LINES: FOR ONE DIRECTION FOR BOTH DIRECTIONS	4 (100) 2 ø 4 (100)	SOLID SOLID	YELLOW YELLOW	5½ (140) C-C FROM SKIP-DASH CENTERLINE 11 (280) C-C OMIT SKIP-DASH CENTERLINE BETWEEN
LANE LINES	4 (100) 5 (125) ON FREEWAYS	SKIP-DASH SKIP-DASH	WHITE WHITE	10' (3 m) LINE WITH 30' (9 m) SPACE
DOTTED LINES (EXTENSIONS OF CENTER, LANE OR TURN LANE MARKINGS)	SAME AS LINE BEING EXTENDED	SKIP-DASH	SAME AS LINE BEING EXTENDED	2' (600) LINE WITH 6' (1.8 m) SPACE
EDGE LINES	4 (100)	SOLID	YELLOW-LEFT WHITE-RIGHT	OUTLINE MOUNTABLE MEDIANS IN YELLOW; EDGE LINES ARE NOT USED NEXT TO BARRIER CURB
TURN LANE MARKINGS	6 (150) LINE; FULL SIZE LETTERS & SYMBOLS (8' (2.4m))	SOLID	WHITE	SEE TYPICAL TURN LANE MARKING DETAIL
TWO WAY LEFT TURN MARKING	2 ø 4 (100) EACH DIRECTION 8' (2.4m) LEFT ARROW	SKIP-DASH AND SOLID IN PAIRS	YELLOW WHITE	10' (3 m) LINE WITH 30' (9 m) SPACE FOR SKIP-DASH; 5½ (140) C-C BETWEEN SOLID LINE AND SKIP-DASH LINE SEE TYPICAL TWO-WAY LEFT TURN MARKING DETAIL
CROSSWALK LINES (PEDESTRIAN) A. DIAGONALS (BIKE & EQUESTRIAN) B. LONGITUDINAL BARS (SCHOOL)	2 ø 6 (150) 12 (300) ø 45° 12 (300) ø 90°	SOLID SOLID SOLID	WHITE WHITE WHITE	NOT LESS THAN 6' (1.8 m) APART 2' (600) APART 2' (600) APART SEE TYPICAL CROSSWALK MARKING DETAILS.
STOP LINES	24 (600)	SOLID	WHITE	PLACE 4' (1.2 m) IN ADVANCE OF AND PARALLEL TO CROSSWALK, IF PRESENT. OTHERWISE, PLACE AT DESIRED STOPPING POINT. PARALLEL TO CROSSROAD CENTERLINE, WHERE POSSIBLE
PAINTED MEDIANS	2 ø 4 (100) WITH 12 (300) DIAGONALS ø 45° NO DIAGONALS USED FOR 4' (1.2 m) WIDE MEDIANS	SOLID	YELLOW: TWO WAY TRAFFIC WHITE: ONE WAY TRAFFIC	11 (280) C-C FOR THE DOUBLE LINE SEE TYPICAL PAINTED MEDIAN MARKING.
GORE MARKING AND CHANNELIZING LINES	8 (200) WITH 12 (300) DIAGONALS ø 45°	SOLID	WHITE	DIAGONALS: 15' (4.5 m) C-C (LESS THAN 30MPH (50 km/h)) 20' (6 m) C-C 30MPH (50 km/h) TO 45MPH (70 km/h)) 30' (9 m) C-C (OVER 45MPH (70 km/h))
RAILROAD CROSSING	24 (600) TRANSVERSE LINES; "RR" IS 6' (1.8 m) LETTERS; 16 (400) LINE FOR "X"	SOLID	WHITE	SEE STATE STANDARD 780001 AREA OF: "R"=3.6 SQ. FT. (0.33 m^2) EACH "X"=54.0 SQ. FT. (5.0 m^2)
SHOULDER DIAGONALS	12 (300) ø 45°	SOLID	WHITE - RIGHT YELLOW - LEFT	50' (15 m) C-C (LESS THAN 30MPH (50 km/h)) 75' (25 m) C-C (30 MPH (50 km/h) TO 45MPH (70 km/h)) 150' (45 m) C-C (OVER 45MPH (70 km/h))

FOR FURTHER DETAILS ON PAVEMENT MARKING REFER TO STANDARD SPECIFICATIONS FOR ROAD AND BRIDGE CONSTRUCTION AND STATE STANDARD 780001.

All dimensions are in inches (millimeters) unless otherwise shown.

FILE NAME = c:\pw_work\pwidot\drivakosgn\d0108315\tc13.dgn	USER NAME = drivakosgn	DESIGNED - EVERS	REVISED -T. RAMMACHER 10-27-94
		DRAWN -	REVISED -C. JUCIUS 09-09-09
	PLOT SCALE = 50.000 ' / IN.	CHECKED -	REVISED -
	PLOT DATE = 9/9/2009	DATE - 03-19-90	REVISED -

STATE OF ILLINOIS
DEPARTMENT OF TRANSPORTATION

DISTRICT ONE
TYPICAL PAVEMENT MARKINGS

SCALE: NONE | SHEET NO. 1 OF 1 SHEETS | STA. | TO STA.

F.A. RTE.	SECTION	COUNTY	TOTAL SHEETS	SHEET NO.
361	06-00214-27-BR	KANE	87	66
	TC-13	CONTRACT NO. 63595		
FED. ROAD DIST. NO. 1	ILLINOIS	FED. AID PROJECT		

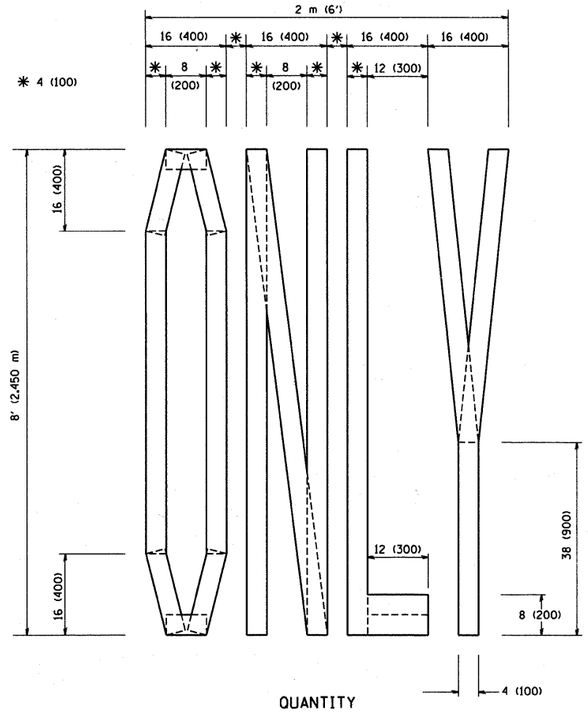

QUANTITY
4 (100) LINE = 64.1 ft. (19.7 m)
21.1 sq. ft. (1.97 sq. m)

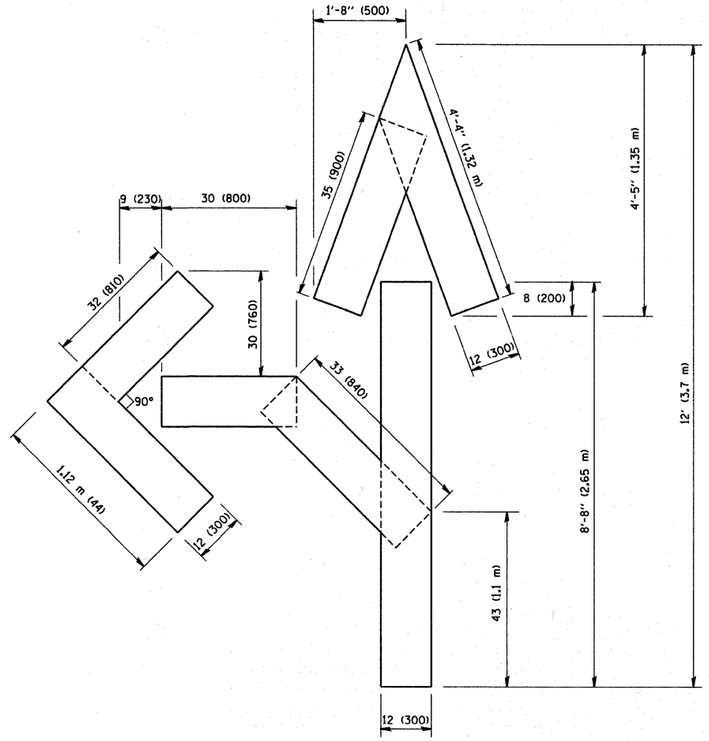

QUANTITY
4 (100) LINE = 82.5 ft. (25.3 m)
27.5 sq. ft. (2.53 sq. m)

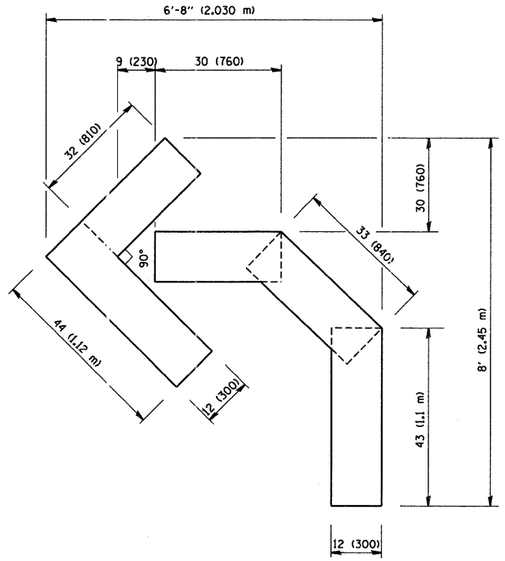

QUANTITY
4 (100) LINE = 45.5 ft. (13.9 m)
15.2 sq. ft. (1.39 sq. m)

All dimensions are in inches (millimeters) unless otherwise shown.

FILE NAME = W:\diststd\22x34\tc16.dgn	USER NAME = gaglienobt	DESIGNED -	REVISED -T. RAMMACHER 06-05-96	STATE OF ILLINOIS DEPARTMENT OF TRANSPORTATION	PAVEMENT MARKING LETTERS AND SYMBOLS FOR TRAFFIC STAGING			F.A. RTE.	SECTION	COUNTY	TOTAL SHEETS	SHEET NO.
		DRAWN -	REVISED -T. RAMMACHER 11-04-97					361	06-00214-27-BR	KANE	87	67
	PLOT SCALE = 50.0000 '/ IN.	CHECKED -	REVISED -T. RAMMACHER 03-02-98						TC-16	CONTRACT NO. 63595		
	PLOT DATE = 1/4/2008	DATE - 09-18-94	REVISED -E. GOMEZ 08-28-00		SCALE: NONE	SHEET NO. 1 OF 1 SHEETS	STA. TO STA.	FED. ROAD DIST. NO. 1	ILLINOIS	FED. AID PROJECT		

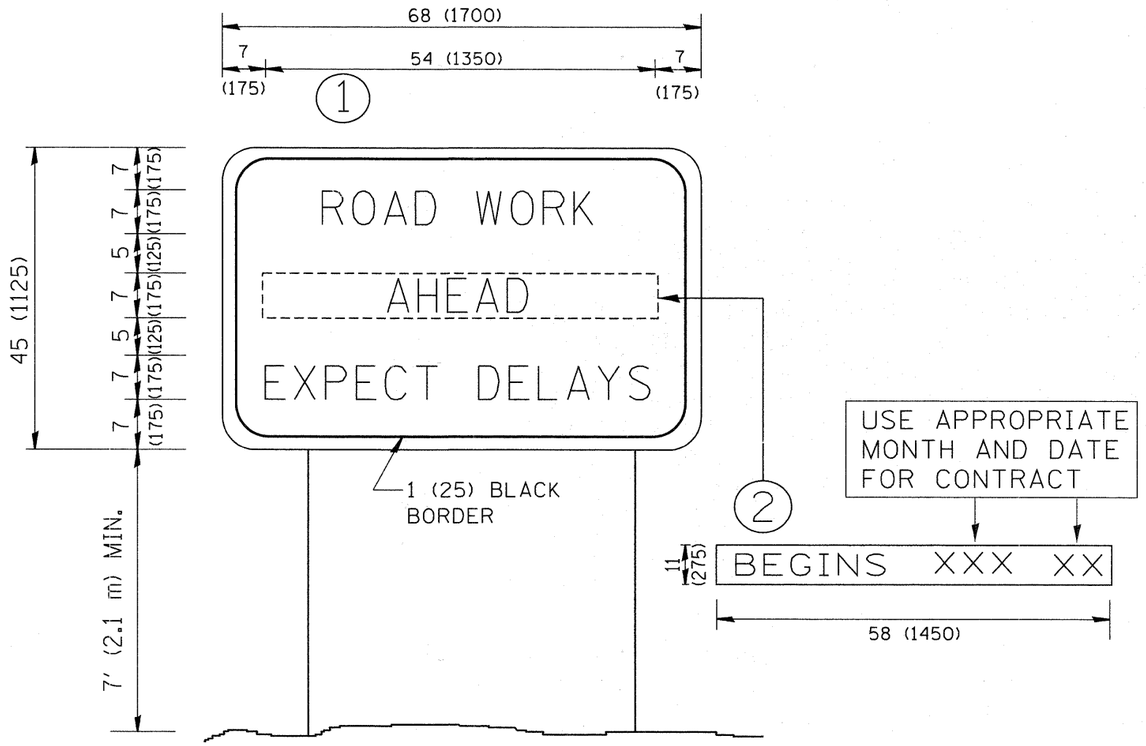

NOTES:

1. USE BLACK LETTERING ON ORANGE BACKGROUND.
2. ERECT SIGNS IN ADVANCE OF THE LOCATION FOR THE "ROAD CONSTRUCTION AHEAD" SIGN AT LOCATIONS AS DIRECTED BY THE ENGINEER.
3. ERECT SIGN (1) WITH INSTALLED PANEL (2) ONE WEEK PRIOR TO THE START OF CONSTRUCTION.
4. REMOVE PANEL (2) SOON AFTER THE START OF CONSTRUCTION.
5. SEE SPECIAL PROVISION FOR "TEMPORARY INFORMATION SIGNING" FOR ADDITIONAL INFORMATION.
6. ONE SIGN ASSEMBLY EQUALS 25.70 SQ. FT. (2.3 SQ. M.)
7. SHALL BE PAID FOR AS TEMPORARY INFORMATION SIGNING.

ALL DIMENSIONS ARE IN INCHES (MILLIMETERS) UNLESS OTHERWISE SHOWN.

FILE NAME = W:\diststd\22x34\tc22.dgn	USER NAME = gaglianobt	DESIGNED -	REVISED - R. MIRS 09-15-97
		DRAWN -	REVISED - R. MIRS 12-11-97
	PLOT SCALE = 50.000 '/ IN.	CHECKED -	REVISED -T. RAMMACHER 02-02-99
	PLOT DATE = 1/4/2008	DATE -	REVISED - C. JUCIUS 01-31-07

STATE OF ILLINOIS
DEPARTMENT OF TRANSPORTATION

ARTERIAL ROAD
INFORMATION SIGN

SCALE: NONE | SHEET NO. 1 OF 1 SHEETS | STA. | TO STA.

F.A. RTE.	SECTION	COUNTY	TOTAL SHEETS	SHEET NO.
361	06-00214-27-BR	KANE	87	68
	TC-22	CONTRACT NO. 63595		
FED. ROAD DIST. NO. 1	ILLINOIS	FED. AID PROJECT		

150 140 130 120 110 100 90 80 70 60 50 40 30 20 10 0 10 20 30 40 50 60 70 80 90 100 110 120 130 140 150

810
805
800

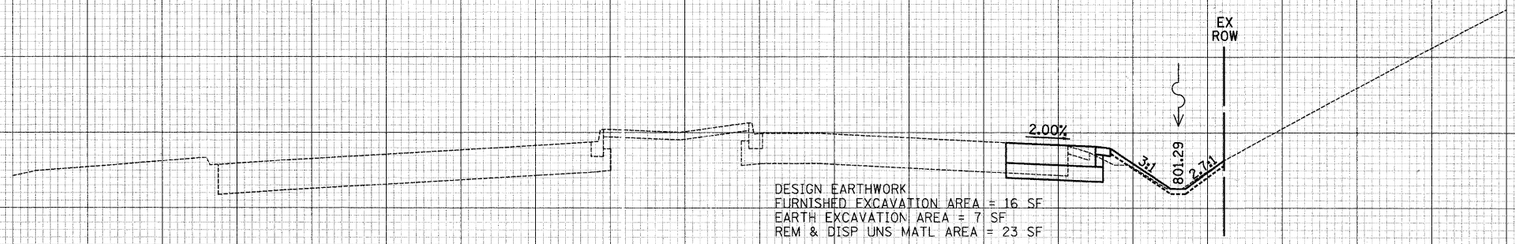

DESIGN EARTHWORK
FURNISHED EXCAVATION AREA = 16 SF
EARTH EXCAVATION AREA = 7 SF
REM & DISP UNS MATL AREA = 23 SF

473+00

810
805
800

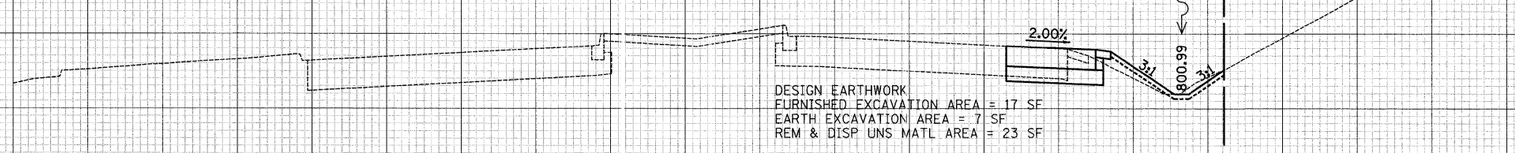

DESIGN EARTHWORK
FURNISHED EXCAVATION AREA = 17 SF
EARTH EXCAVATION AREA = 7 SF
REM & DISP UNS MATL AREA = 23 SF

472+58

810
805
800

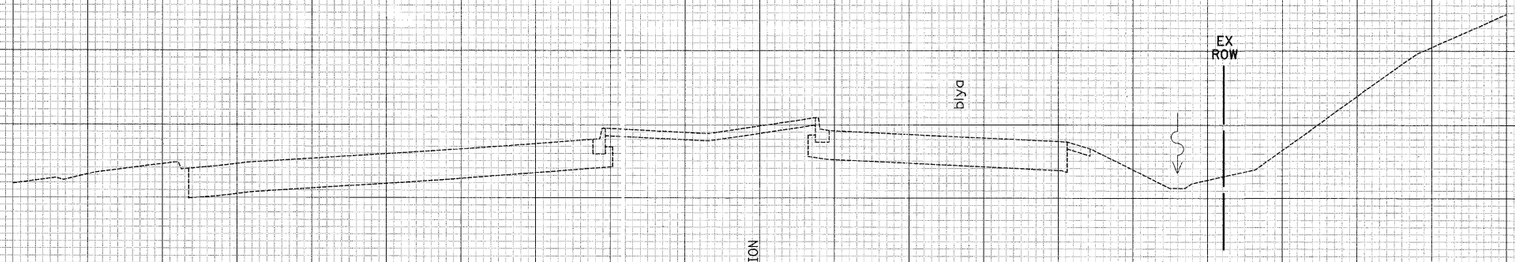

472+00

CONSTRUCTION BASELINE

150 140 130 120 110 100 90 80 70 60 50 40 30 20 10 0 10 20 30 40 50 60 70 80 90 100 110 120 130 140 150

FINAL SURVEY
NOTE BOOK
NO.
SURVEYED
PLOTTED
TRANSLATE
AREAS
AREAS CHECKED
BY
DATE

ORIGINAL SURVEY
NOTE BOOK
NO.
SURVEYED
PLOTTED
TRANSLATE
AREAS
AREAS CHECKED
BY
DATE

CIVILTECH
450 E Devon Ave, Suite 300
Itasca, Illinois 60143
Tel: 630.773.3900 Fax: 630.773.3975
www.civiltechinc.com

DESIGNED - PK	REVISED -	
DRAWN - PK	REVISED -	
CHECKED - RTM	REVISED -	
DATE - 3/25/2011	REVISED -	

STATE OF ILLINOIS
DEPARTMENT OF TRANSPORTATION

VERT. 0 5 10
HORIZ. 0 10 20

CROSS SECTIONS – RANDALL ROAD

SHEET NO. 1 OF 5 SHEETS | STA. 472+49.00 TO STA. 473+00.00

F.A.P. RTE.	SECTION	COUNTY	TOTAL SHEETS	SHEET NO.
361	06-00214-27-BR	KANE	87	69
		CONTRACT NO. 63595		

FED. ROAD DIST. NO. 1 | ILLINOIS | FED. AID PROJECT

150 140 130 120 110 100 90 80 70 60 50 40 30 20 10 0 10 20 30 40 50 60 70 80 90 100 110 120 130 140 150

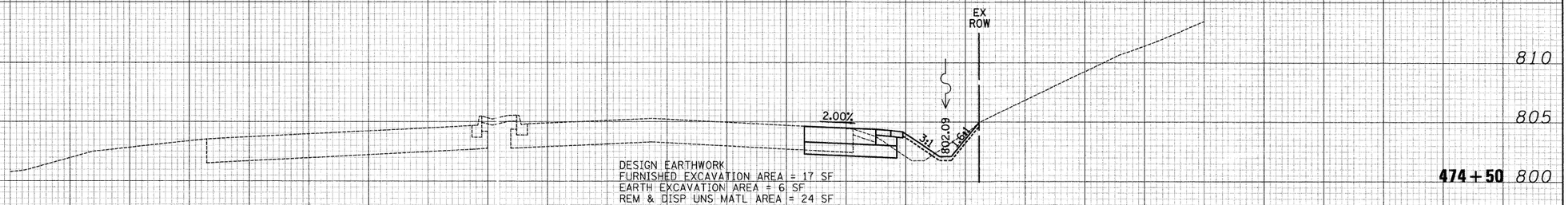

474+50

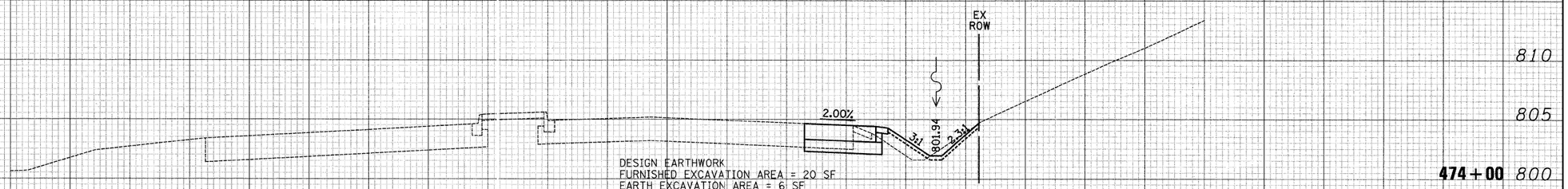

474+00

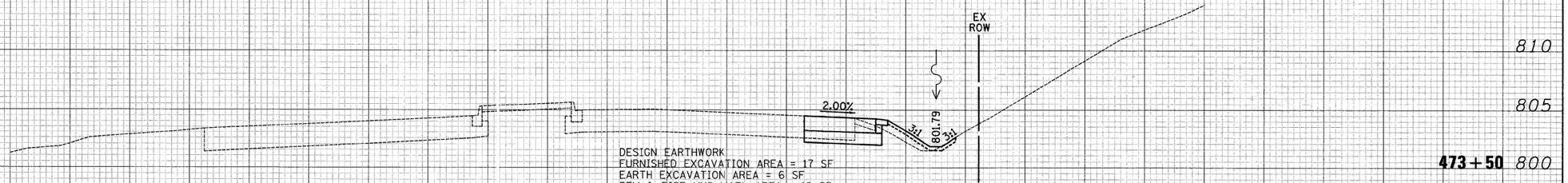

473+50

CONSTRUCTION BASELINE

150 140 130 120 110 100 90 80 70 60 50 40 30 20 10 0 10 20 30 40 50 60 70 80 90 100 110 120 130 140 150

FINAL SURVEY — NOTE BOOK — NO. — SURVEYED — PLOTTED — TOPO DATE — AREAS — AREAS CHECKED — BY — DATE

ORIGINAL SURVEY — NOTE BOOK — NO. — SURVEYED — PLOTTED — TOPO DATE — AREAS — AREAS CHECKED — BY — DATE

CIVILTECH
450 E Devon Ave, Suite 300
Itasca, Illinois 60143
Tel: 630.773.3900 Fax: 630.773.3975
www.civiltechinc.com

DESIGNED	- PK	REVISED	-
DRAWN	- PK	REVISED	-
CHECKED	- RTM	REVISED	-
DATE	- 3/25/2011	REVISED	-

STATE OF ILLINOIS
DEPARTMENT OF TRANSPORTATION

VERT. 0 5 10
HORIZ. 0 10 20

CROSS SECTIONS – RANDALL ROAD

SHEET NO. 2 OF 5 SHEETS | STA. 473+50.00 TO STA. 474+50.00

F.A.P. RTE.	SECTION	COUNTY	TOTAL SHEETS	SHEET NO.
361	06-00214-27-BR	KANE	87	70
		CONTRACT NO. 63595		
FED. ROAD DIST. NO. 1	ILLINOIS	FED. AID PROJECT		

150 140 130 120 110 100 90 80 70 60 50 40 30 20 10 0 10 20 30 40 50 60 70 80 90 100 110 120 130 140 150

810
805
800

EX ROW

2.00%

3:1

802.54

DESIGN EARTHWORK
FURNISHED EXCAVATION AREA = 11 SF
EARTH EXCAVATION AREA = 8 SF
REM & DISP UNS MATL AREA = 17 SF

476+00

EX ROW

2.00%

3:1

802.39

2.5:1

DESIGN EARTHWORK
FURNISHED EXCAVATION AREA = 14 SF
EARTH EXCAVATION AREA = 7 SF
REM & DISP UNS MATL AREA = 23 SF

475+50

EX ROW

2.00%

3:1

802.24

2:1

DESIGN EARTHWORK
FURNISHED EXCAVATION AREA = 15 SF
EARTH EXCAVATION AREA = 7 SF
REM & DISP UNS MATL AREA = 23 SF

475+00

CONSTRUCTION BASELINE

FINAL SURVEY	DATE	BY
SURVEYED		
PLOTTED		
NOTE BOOK	TEMPLATE	
NO.	AREAS	AREAS CHECKED

ORIGINAL SURVEY	DATE	BY
SURVEYED		
PLOTTED		
NOTE BOOK	TEMPLATE	
NO.	AREAS	AREAS CHECKED

CIVILTECH
450 E Devon Ave, Suite 300
Itasca, Illinois 60143
Tel: 630.773.3900 Fax: 630.773.3975
www.civiltechinc.com

DESIGNED	- PK	REVISED	-
DRAWN	- PK	REVISED	-
CHECKED	- RTM	REVISED	-
DATE	- 3/25/2011	REVISED	-

STATE OF ILLINOIS
DEPARTMENT OF TRANSPORTATION

VERT. 0 5 10
HORIZ. 0 10 20

CROSS SECTIONS – RANDALL ROAD

SHEET NO. 3 OF 5 SHEETS | STA. 475+00.00 TO STA. 476+00.00

F.A.P. RTE.	SECTION	COUNTY	TOTAL SHEETS	SHEET NO.
361	06-00214-27-BR	KANE	87	71
		CONTRACT NO. 63595		
FED. ROAD DIST. NO. 1	ILLINOIS	FED. AID PROJECT		

150 140 130 120 110 100 90 80 70 60 50 40 30 20 10 0 10 20 30 40 50 60 70 80 90 100 110 120 130 140 150

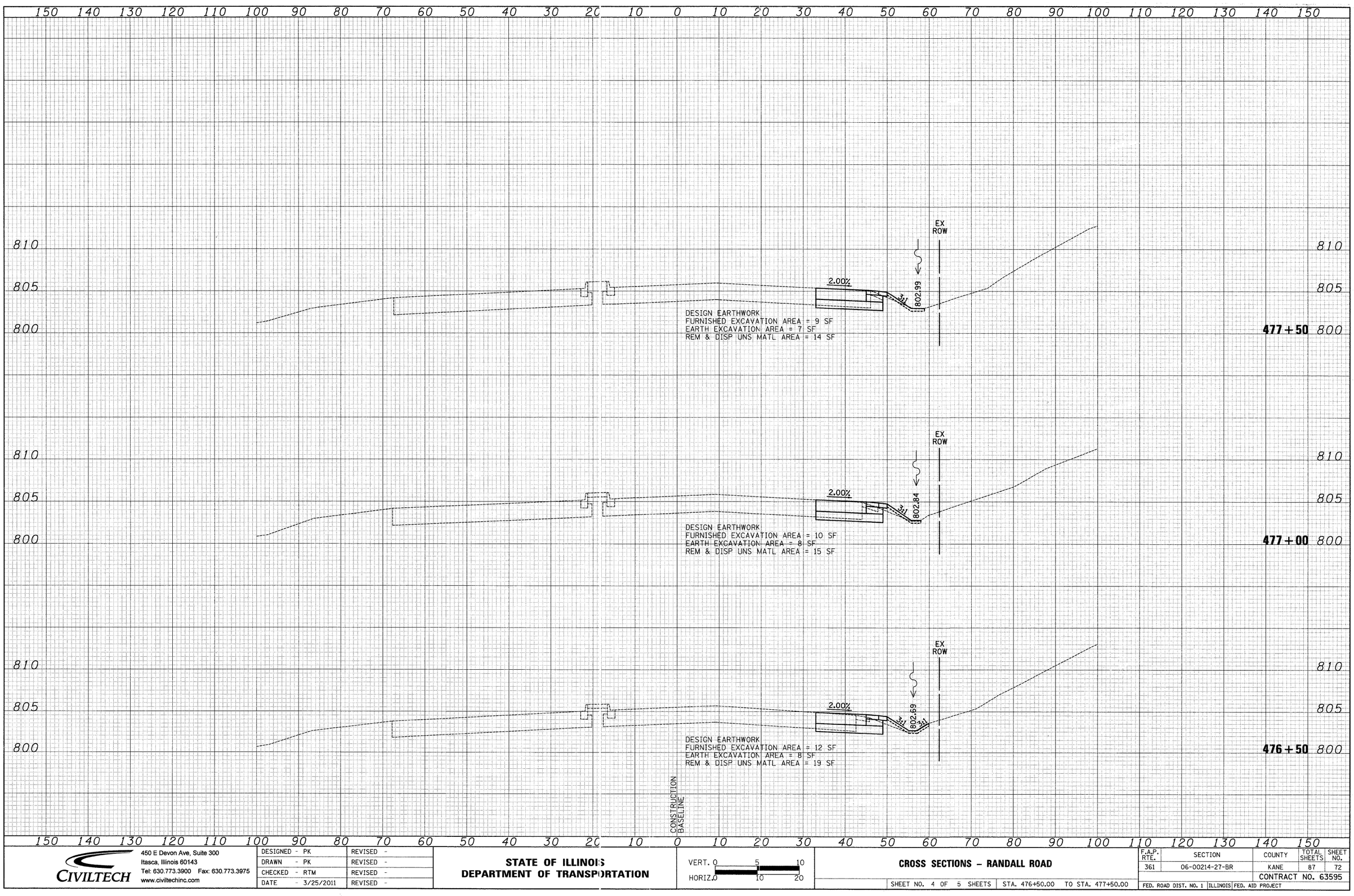

150 140 130 120 110 100 90 80 70 60 50 40 30 20 10 0 10 20 30 40 50 60 70 80 90 100 110 120 130 140 150

FINAL SURVEY — NOTE BOOK — NO. — SURVEYED — PLOTTED — TOPO DATE — AREAS — AREAS CHECKED — BY — DATE

ORIGINAL SURVEY — NOTE BOOK — NO. — SURVEYED — PLOTTED — TOPO DATE — AREAS — AREAS CHECKED — BY — DATE

CIVILTECH
450 E Devon Ave, Suite 300
Itasca, Illinois 60143
Tel: 630.773.3900 Fax: 630.773.3975
www.civiltechinc.com

DESIGNED	- PK	REVISED	-
DRAWN	- PK	REVISED	-
CHECKED	- RTM	REVISED	-
DATE	- 3/25/2011	REVISED	-

STATE OF ILLINOIS
DEPARTMENT OF TRANSPORTATION

VERT. 0 5 10
HORIZ. 0 10 20

CROSS SECTIONS – RANDALL ROAD

SHEET NO. 4 OF 5 SHEETS | STA. 476+50.00 TO STA. 477+50.00

F.A.P. RTE.	SECTION	COUNTY	TOTAL SHEETS	SHEET NO.
361	06-00214-27-BR	KANE	87	72
		CONTRACT NO. 63595		
FED. ROAD DIST. NO. 1	ILLINOIS	FED. AID PROJECT		

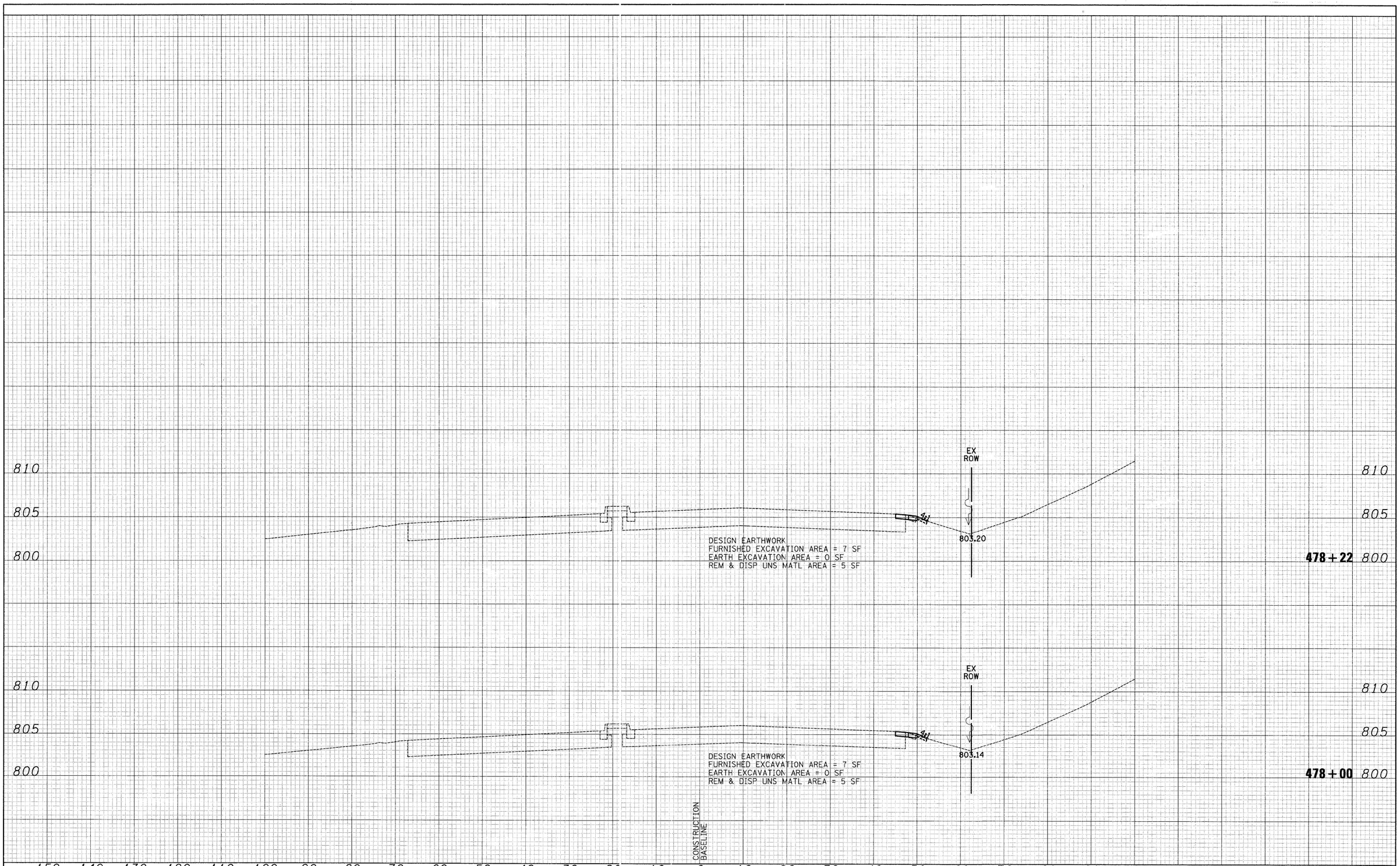

FINAL SURVEY — NOTE BOOK NO. — SURVEYED — PLOTTED — TEMPLATE — AREAS — AREAS CHECKED — BY — DATE

ORIGINAL SURVEY — NOTE BOOK NO. — SURVEYED — PLOTTED — TEMPLATE — AREAS — AREAS CHECKED — BY — DATE

CIVILTECH
450 E Devon Ave, Suite 300
Itasca, Illinois 60143
Tel: 630.773.3900 Fax: 630.773.3975
www.civiltechinc.com

DESIGNED	- PK	REVISED	-
DRAWN	- PK	REVISED	-
CHECKED	- RTM	REVISED	-
DATE	- 3/25/2011	REVISED	-

STATE OF ILLINOIS
DEPARTMENT OF TRANSPORTATION

VERT. 0 5 10
HORIZ. 0 10 20

CROSS SECTIONS – RANDALL ROAD

SHEET NO. 5 OF 5 SHEETS | STA. 478+00.00 TO STA. 478+22.18

F.A.P. RTE.	SECTION	COUNTY	TOTAL SHEETS	SHEET NO.
361	06-00214-27-BR	KANE	87	73

CONTRACT NO. 63595

FED. ROAD DIST. NO. 1 | ILLINOIS | FED. AID PROJECT

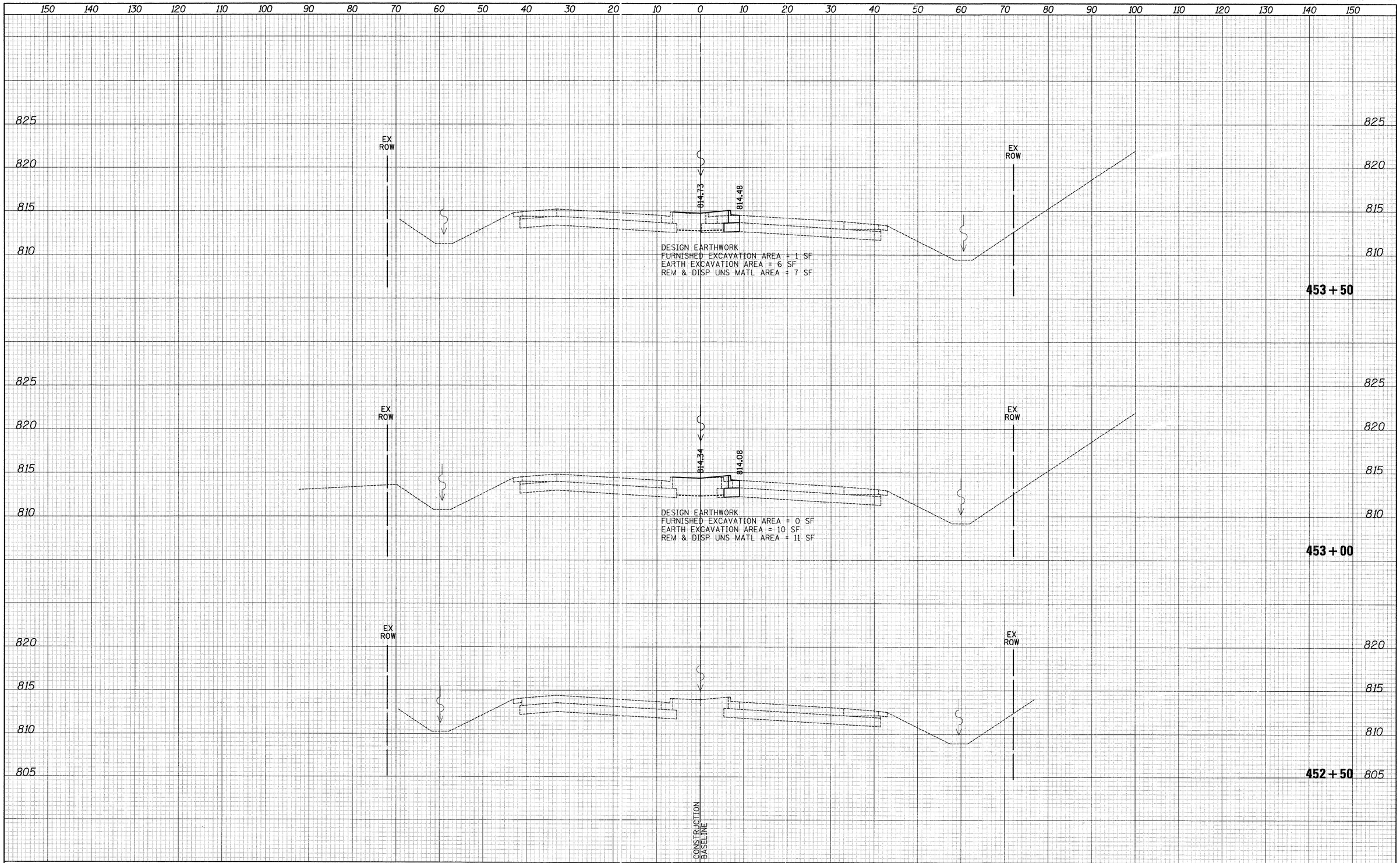

FINAL SURVEY — NOTE BOOK NO. — SURVEYED — PLOTTED — TEMPLATE — AREAS — AREAS CHECKED — BY — DATE

ORIGINAL SURVEY — NOTE BOOK NO. — SURVEYED — PLOTTED — TEMPLATE — AREAS — AREAS CHECKED — BY — DATE

CIVILTECH
450 E Devon Ave, Suite 300
Itasca, Illinois 60143
Tel: 630.773.3900 Fax: 630.773.3975
www.civiltechinc.com

DESIGNED - PK	REVISED -	
DRAWN - PK	REVISED -	
CHECKED - RTM	REVISED -	
DATE - 3/25/2011	REVISED -	

STATE OF ILLINOIS
DEPARTMENT OF TRANSPORTATION

VERT. 0 5 10
HORIZ. 0 10 20

CROSS SECTIONS - STEARNS ROAD

SHEET NO. 1 OF 8 SHEETS | STA. 452+50 TO STA. 453+50

F.A.P. RTE.	SECTION	COUNTY	TOTAL SHEETS	SHEET NO.
361	06-00214-27-BR	KANE	87	74
		CONTRACT NO. 63595		
FED. ROAD DIST. NO. 1	ILLINOIS	FED. AID PROJECT		

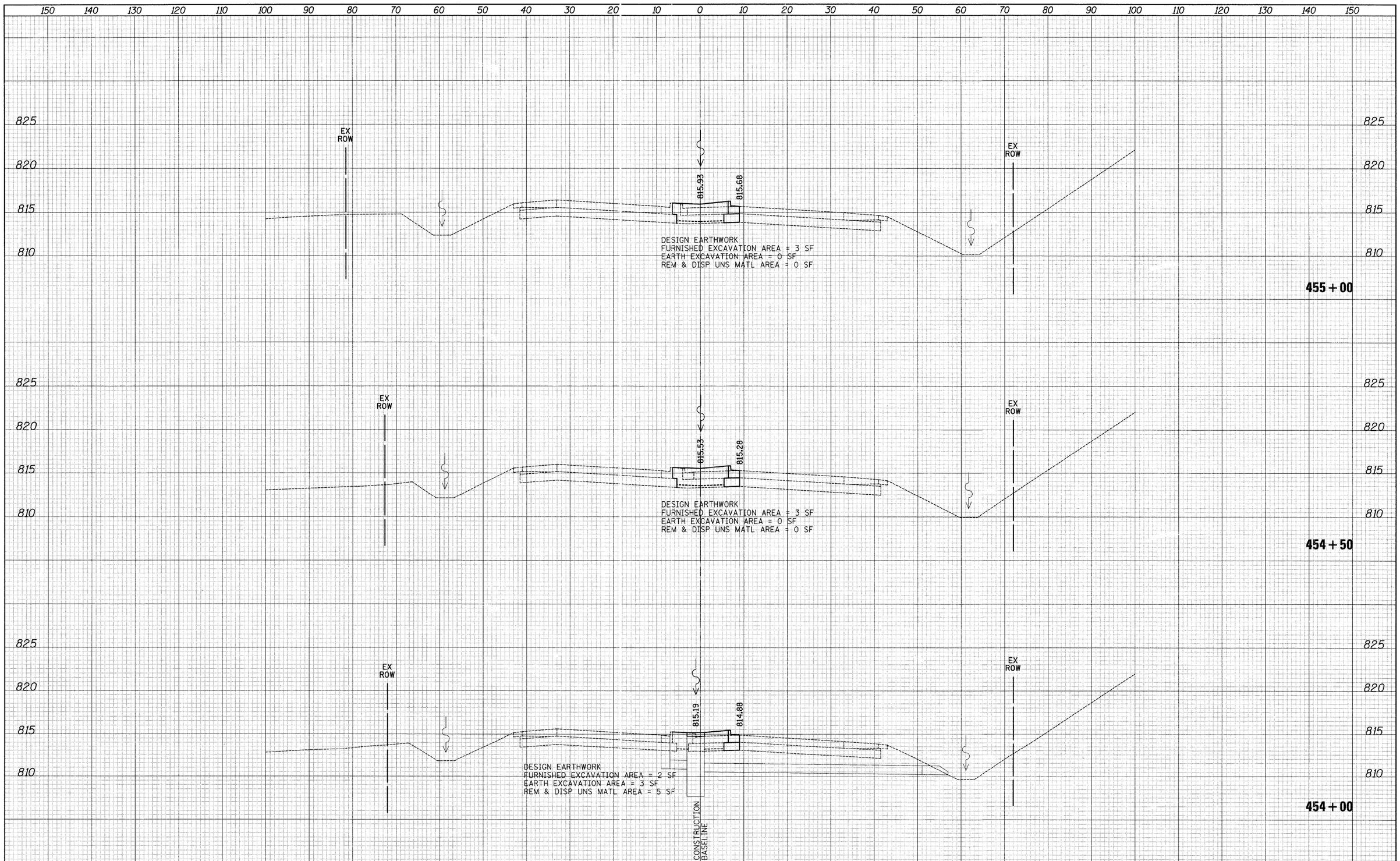

FINAL SURVEY — NOTE BOOK NO. — SURVEYED — PLOTTED — TEMPLATE — AREAS — AREAS CHECKED — BY — DATE

ORIGINAL SURVEY — NOTE BOOK NO. — SURVEYED — PLOTTED — TEMPLATE — AREAS — AREAS CHECKED — BY — DATE

CIVILTECH
450 E Devon Ave, Suite 300
Itasca, Illinois 60143
Tel: 630.773.3900 Fax: 630.773.3975
www.civiltechinc.com

DESIGNED - PK	REVISED -		
DRAWN - PK	REVISED -		
CHECKED - RTM	REVISED -		
DATE - 3/25/2011	REVISED -		

STATE OF ILLINOIS
DEPARTMENT OF TRANSPORTATION

VERT. 0 5 10
HORIZ. 0 10 20

CROSS SECTIONS - STEARNS ROAD

SHEET NO. 2 OF 8 SHEETS | STA. 454+00 TO STA. 455+00

F.A.P. RTE.	SECTION	COUNTY	TOTAL SHEETS	SHEET NO.
361	06-00214-27-BR	KANE	87	75

CONTRACT NO. 63595

FED. ROAD DIST. NO. 1 | ILLINOIS | FED. AID PROJECT

150 140 130 120 110 100 90 80 70 60 50 40 30 20 10 0 10 20 30 40 50 60 70 80 90 100 110 120 130 140 150

825
820
815
810

EX ROW

817.12
816.81
816.87

DESIGN EARTHWORK
FURNISHED EXCAVATION AREA = 1 SF
EARTH EXCAVATION AREA = 0 SF
REM & DISP UNS MATL AREA = 0 SF

EX ROW

456 + 50

825
820
815
810

EX ROW

816.71
816.46

DESIGN EARTHWORK
FURNISHED EXCAVATION AREA = 2 SF
EARTH EXCAVATION AREA = 0 SF
REM & DISP UNS MATL AREA = 0 SF

EX ROW

456 + 00

825
820
815
810

EX ROW

816.33
816.08

DESIGN EARTHWORK
FURNISHED EXCAVATION AREA = 3 SF
EARTH EXCAVATION AREA = 0 SF
REM & DISP UNS MATL AREA = 0 SF

EX ROW

CONSTRUCTION BASELINE

455 + 50

150 140 130 120 110 100 90 80 70 60 50 40 30 20 10 0 10 20 30 40 50 60 70 80 90 100 110 120 130 140 150

FINAL SURVEY — NOTE BOOK — NO. — SURVEYED — PLOTTED — TYPED — AREAS — AREAS CHECKED — BY — DATE

ORIGINAL SURVEY — NOTE BOOK — NO. — SURVEYED — PLOTTED — TYPED — AREAS — AREAS CHECKED — BY — DATE

CIVILTECH
450 E Devon Ave, Suite 300
Itasca, Illinois 60143
Tel: 630.773.3900 Fax: 630.773.3975
www.civiltechinc.com

DESIGNED	- PK	REVISED -
DRAWN	- PK	REVISED -
CHECKED	- RTM	REVISED -
DATE	- 3/25/2011	REVISED -

STATE OF ILLINOIS
DEPARTMENT OF TRANSPORTATION

VERT. 0 5 10
HORIZ. 0 10 20

CROSS SECTIONS – STEARNS ROAD

SHEET NO. 3 OF 8 SHEETS | STA. 455+50 | TO STA. 456+50

F.A.P. RTE.	SECTION	COUNTY	TOTAL SHEETS	SHEET NO.
361	06-00214-27-BR	KANE	87	76
		CONTRACT NO. 63595		
FED. ROAD DIST. NO. 1	ILLINOIS	FED. AID PROJECT		

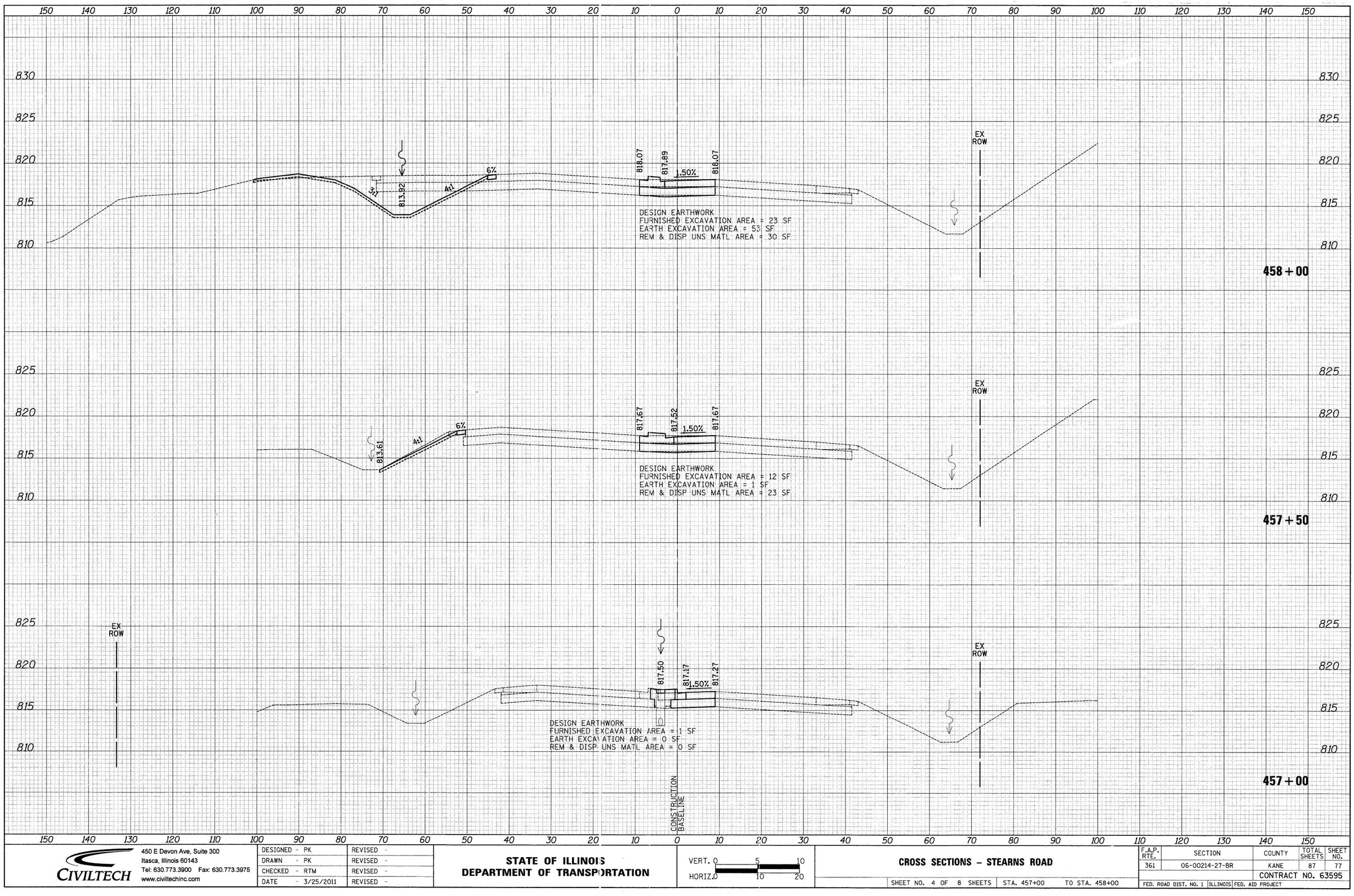

FINAL SURVEY — NOTE BOOK NO. — SURVEYED — PLOTTED — TEMPLATE — AREAS — AREAS CHECKED — BY — DATE

ORIGINAL SURVEY — NOTE BOOK NO. — SURVEYED — PLOTTED — TEMPLATE — AREAS — AREAS CHECKED — BY — DATE

CIVILTECH
450 E Devon Ave, Suite 300
Itasca, Illinois 60143
Tel: 630.773.3900 Fax: 630.773.3975
www.civiltechinc.com

DESIGNED	- PK	REVISED	-
DRAWN	- PK	REVISED	-
CHECKED	- RTM	REVISED	-
DATE	- 3/25/2011	REVISED	-

STATE OF ILLINOIS
DEPARTMENT OF TRANSPORTATION

VERT. 0 5 10
HORIZ. 0 10 20

CROSS SECTIONS - STEARNS ROAD

SHEET NO. 4 OF 8 SHEETS | STA. 457+00 TO STA. 458+00

F.A.P. RTE.	SECTION	COUNTY	TOTAL SHEETS	SHEET NO.
361	06-00214-27-BR	KANE	87	77

CONTRACT NO. 63595

FED. ROAD DIST. NO. 1 | ILLINOIS | FED. AID PROJECT

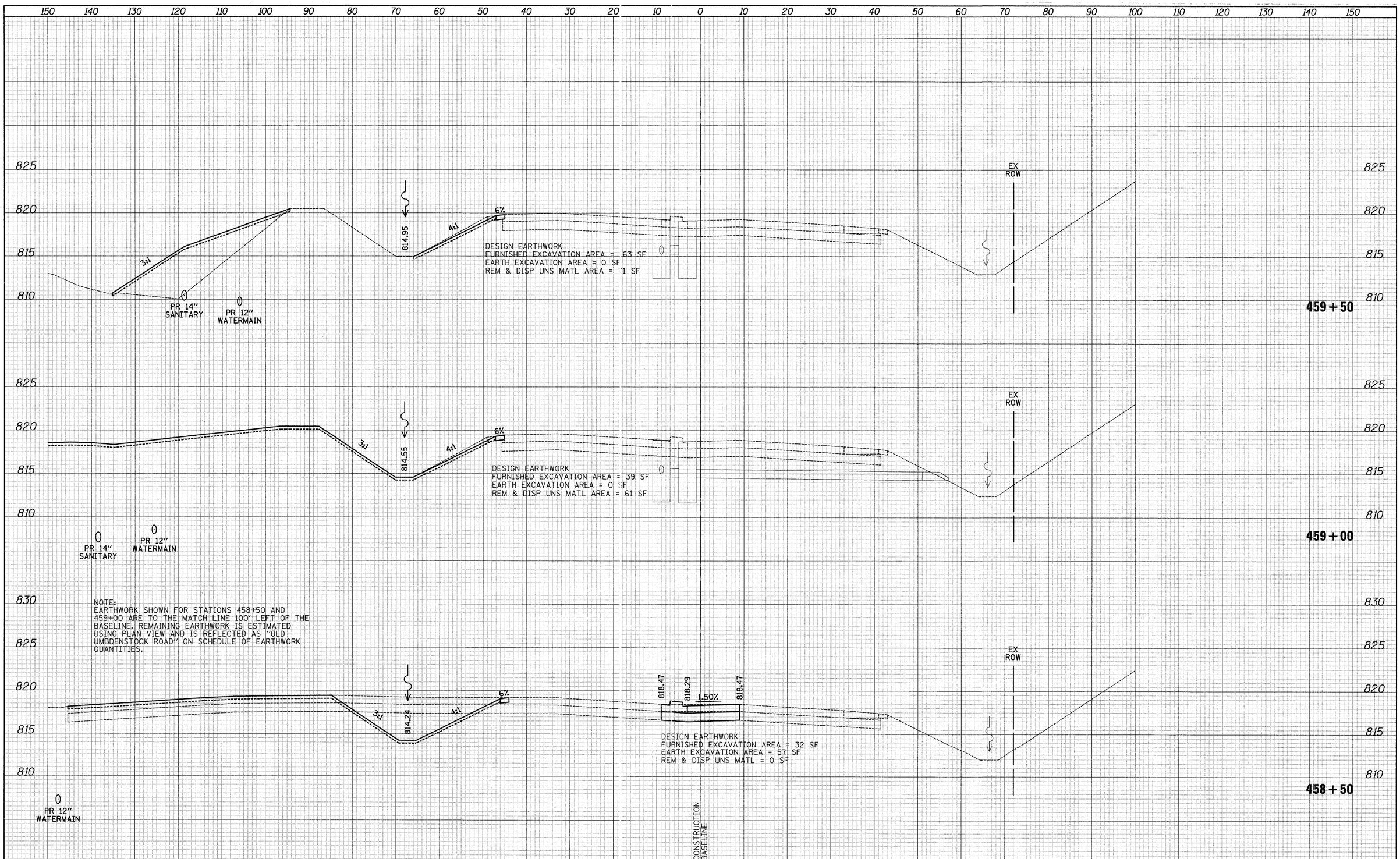

NOTE:
EARTHWORK SHOWN FOR STATIONS 458+50 AND 459+00 ARE TO THE MATCH LINE 100' LEFT OF THE BASELINE. REMAINING EARTHWORK IS ESTIMATED USING PLAN VIEW AND IS REFLECTED AS "OLD UMBDENSTOCK ROAD" ON SCHEDULE OF EARTHWORK QUANTITIES.

FINAL SURVEY: SURVEYED / PLOTTED / TEMPLATE / AREAS / AREAS CHECKED — NOTE BOOK NO. — BY — DATE

ORIGINAL SURVEY: SURVEYED / PLOTTED / TEMPLATE / AREAS / AREAS CHECKED — NOTE BOOK NO. — BY — DATE

CIVILTECH
450 E Devon Ave, Suite 300
Itasca, Illinois 60143
Tel: 630.773.3900 Fax: 630.773.3975
www.civiltechinc.com

DESIGNED	- PK	REVISED	-
DRAWN	- PK	REVISED	-
CHECKED	- RTM	REVISED	-
DATE	- 3/25/2011	REVISED	-

STATE OF ILLINOIS
DEPARTMENT OF TRANSPORTATION

VERT. 0 5 10
HORIZ. 0 10 20

CROSS SECTIONS - STEARNS ROAD

SHEET NO. 5 OF 8 SHEETS | STA. 458+50 TO STA. 459+50

F.A.P. RTE.	SECTION	COUNTY	TOTAL SHEETS	SHEET NO.
361	06-00214-27-BR	KANE	87	78

CONTRACT NO. 63595

FED. ROAD DIST. NO. 1 | ILLINOIS | FED. AID PROJECT

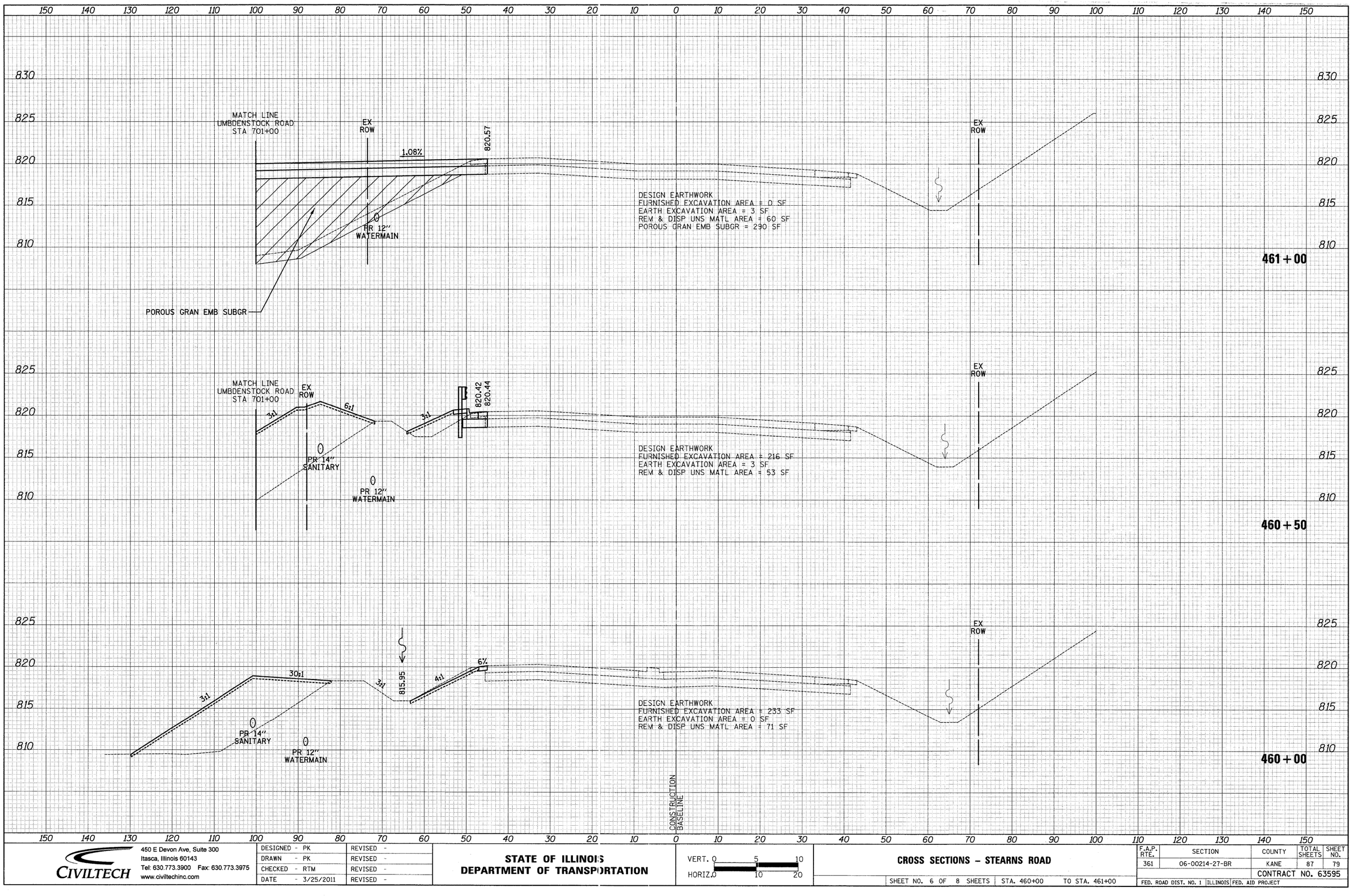

FINAL SURVEY | NOTE BOOK NO. | SURVEYED | PLOTTED | TEMPLATE | AREAS | AREAS CHECKED | BY | DATE

ORIGINAL SURVEY | NOTE BOOK NO. | SURVEYED | PLOTTED | TEMPLATE | AREAS | AREAS CHECKED | BY | DATE

CIVILTECH
450 E Devon Ave, Suite 300
Itasca, Illinois 60143
Tel: 630.773.3900 Fax: 630.773.3975
www.civiltechinc.com

DESIGNED - PK	REVISED -		
DRAWN - PK	REVISED -		
CHECKED - RTM	REVISED -		
DATE - 3/25/2011	REVISED -		

STATE OF ILLINOIS
DEPARTMENT OF TRANSPORTATION

VERT. 0 5 10
HORIZ. 0 10 20

CROSS SECTIONS - STEARNS ROAD

SHEET NO. 6 OF 8 SHEETS | STA. 460+00 TO STA. 461+00

F.A.P. RTE.	SECTION	COUNTY	TOTAL SHEETS	SHEET NO.
361	06-00214-27-BR	KANE	87	79

CONTRACT NO. 63595

FED. ROAD DIST. NO. 1 | ILLINOIS | FED. AID PROJECT

FINAL SURVEY	DATE
NOTE BOOK	BY
NO.	SURVEYED
	PLOTTED
	TYPING DATE
	AREAS
	AREAS CHECKED

ORIGINAL SURVEY	DATE
NOTE BOOK	BY
NO.	SURVEYED
	PLOTTED
	TYPING DATE
	AREAS
	AREAS CHECKED

150 140 130 120 110 100 90 80 70 60 50 40 30 20 10 0 10 20 30 40 50 60 70 80 90 100 110 120 130 140 150

830 825 820 815 810

EX ROW

DESIGN EARTHWORK
FURNISHED EXCAVATION AREA = 0 SF
EARTH EXCAVATION AREA = 0 SF
REM & DISP UNS MATL AREA = 4 SF

462+50

462+00

461+50

4:1

808.73

820.13

820.59

POROUS GRAN EMB SUBGR

DESIGN EARTHWORK
FURNISHED EXCAVATION AREA = 242 SF
EARTH EXCAVATION AREA = 3 SF
REM & DISP UNS MATL AREA = 79 SF
POROUS GRAN EMB SUBGR = 52 SF

CONSTRUCTION BASELINE

CIVILTECH
450 E Devon Ave, Suite 300
Itasca, Illinois 60143
Tel: 630.773.3900 Fax: 630.773.3975
www.civiltechinc.com

DESIGNED	- PK	REVISED -
DRAWN	- PK	REVISED -
CHECKED	- RTM	REVISED -
DATE	- 3/25/2011	REVISED -

STATE OF ILLINOIS
DEPARTMENT OF TRANSPORTATION

VERT. 0 5 10
HORIZ. 0 10 20

CROSS SECTIONS – STEARNS ROAD

SHEET NO. 7 OF 8 SHEETS | STA. 461+50 | TO STA. 462+50

F.A.P. RTE.	SECTION	COUNTY	TOTAL SHEETS	SHEET NO.
361	06-00214-27-BR	KANE	87	80
		CONTRACT NO. 63595		
FED. ROAD DIST. NO. 1	ILLINOIS	FED. AID PROJECT		

FINAL SURVEY	BY	DATE
SURVEYED		
PLOTTED		
NOTE BOOK		
NO.		
AREAS		
AREAS CHECKED		

ORIGINAL SURVEY	BY	DATE
SURVEYED		
PLOTTED		
NOTE BOOK		
NO.		
AREAS		
AREAS CHECKED		

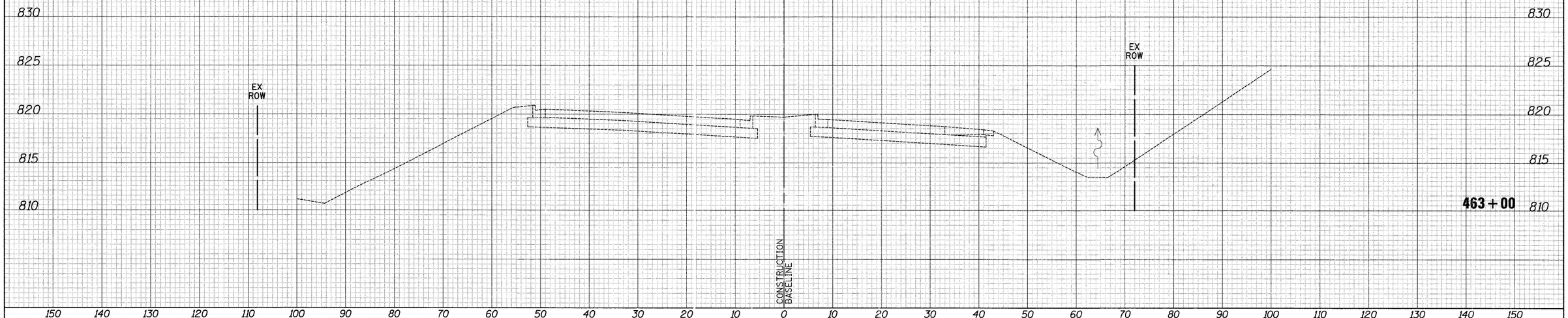

CIVILTECH
450 E Devon Ave, Suite 300
Itasca, Illinois 60143
Tel: 630.773.3900 Fax: 630.773.3975
www.civiltechinc.com

DESIGNED	- PK	REVISED -
DRAWN	- PK	REVISED -
CHECKED	- RTM	REVISED -
DATE	- 3/25/2011	REVISED -

STATE OF ILLINOIS
DEPARTMENT OF TRANSPORTATION

VERT. 0 5 10
HORIZ. 0 10 20

CROSS SECTIONS – STEARNS ROAD

SHEET NO. 8 OF 8 SHEETS | STA. 463+00 | TO STA. 463+00

F.A.P. RTE.	SECTION	COUNTY	TOTAL SHEETS	SHEET NO.
361	06-00214-27-BR	KANE	87	81
		CONTRACT NO. 63595		
FED. ROAD DIST. NO. 1	ILLINOIS	FED. AID PROJECT		

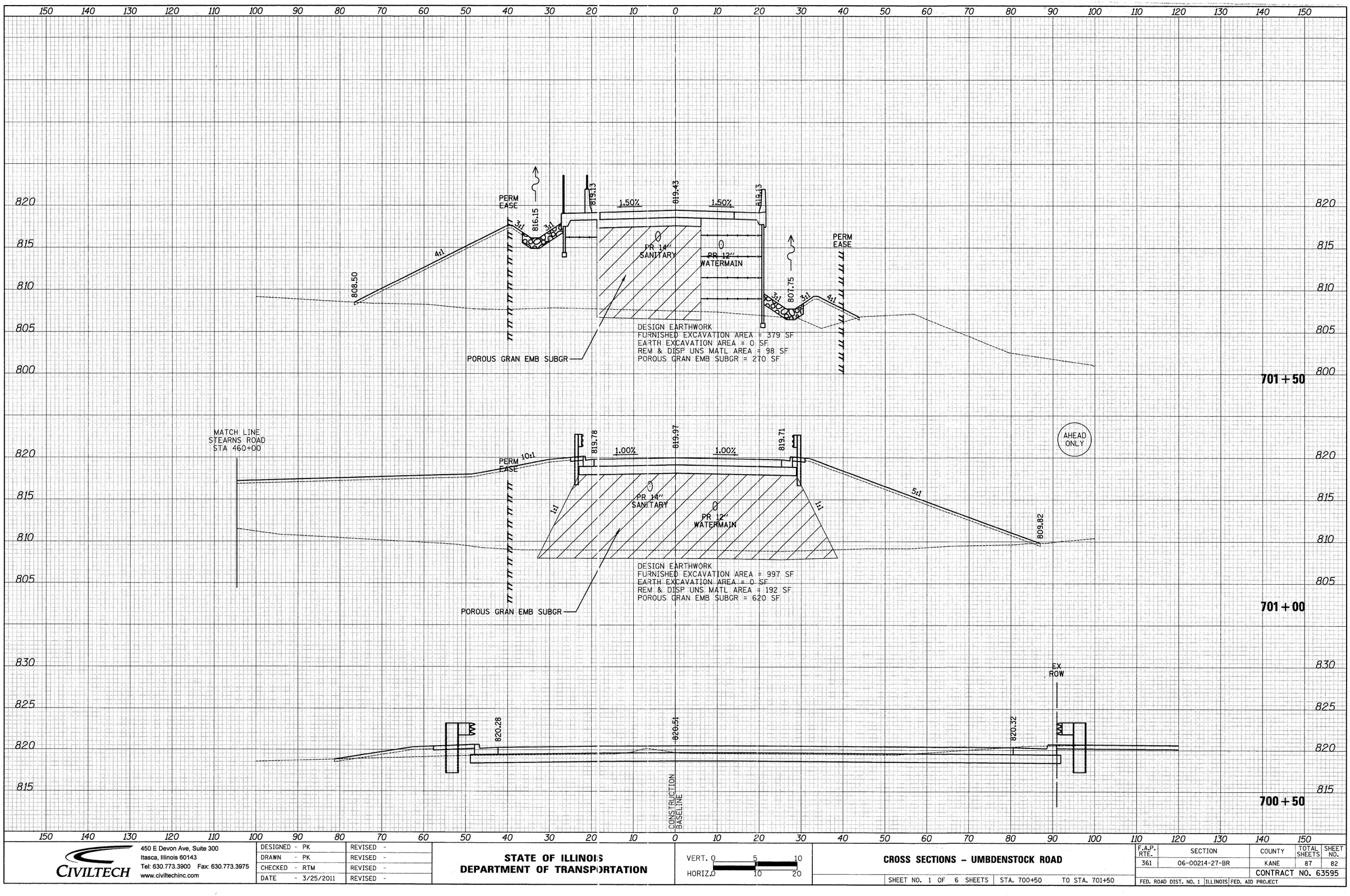

FINAL SURVEY — NOTE BOOK — NO. — SURVEYED — PLOTTED — TEMPLATE — AREAS CHECKED — BY — DATE

ORIGINAL SURVEY — NOTE BOOK — NO. — SURVEYED — PLOTTED — TEMPLATE — AREAS CHECKED — BY — DATE

CIVILTECH
450 E Devon Ave, Suite 300
Itasca, Illinois 60143
Tel: 630.773.3900 Fax: 630.773.3975
www.civiltechinc.com

DESIGNED - PK	REVISED -	
DRAWN - PK	REVISED -	
CHECKED - RTM	REVISED -	
DATE - 3/25/2011	REVISED -	

STATE OF ILLINOIS
DEPARTMENT OF TRANSPORTATION

VERT. 0 5 10
HORIZ. 0 10 20

CROSS SECTIONS – UMBDENSTOCK ROAD

SHEET NO. 1 OF 6 SHEETS | STA. 700+50 | TO STA. 701+50

F.A.P. RTE.	SECTION	COUNTY	TOTAL SHEETS	SHEET NO.
361	06-00214-27-BR	KANE	87	82
		CONTRACT NO. 63595		
FED. ROAD DIST. NO. 1	ILLINOIS	FED. AID PROJECT		

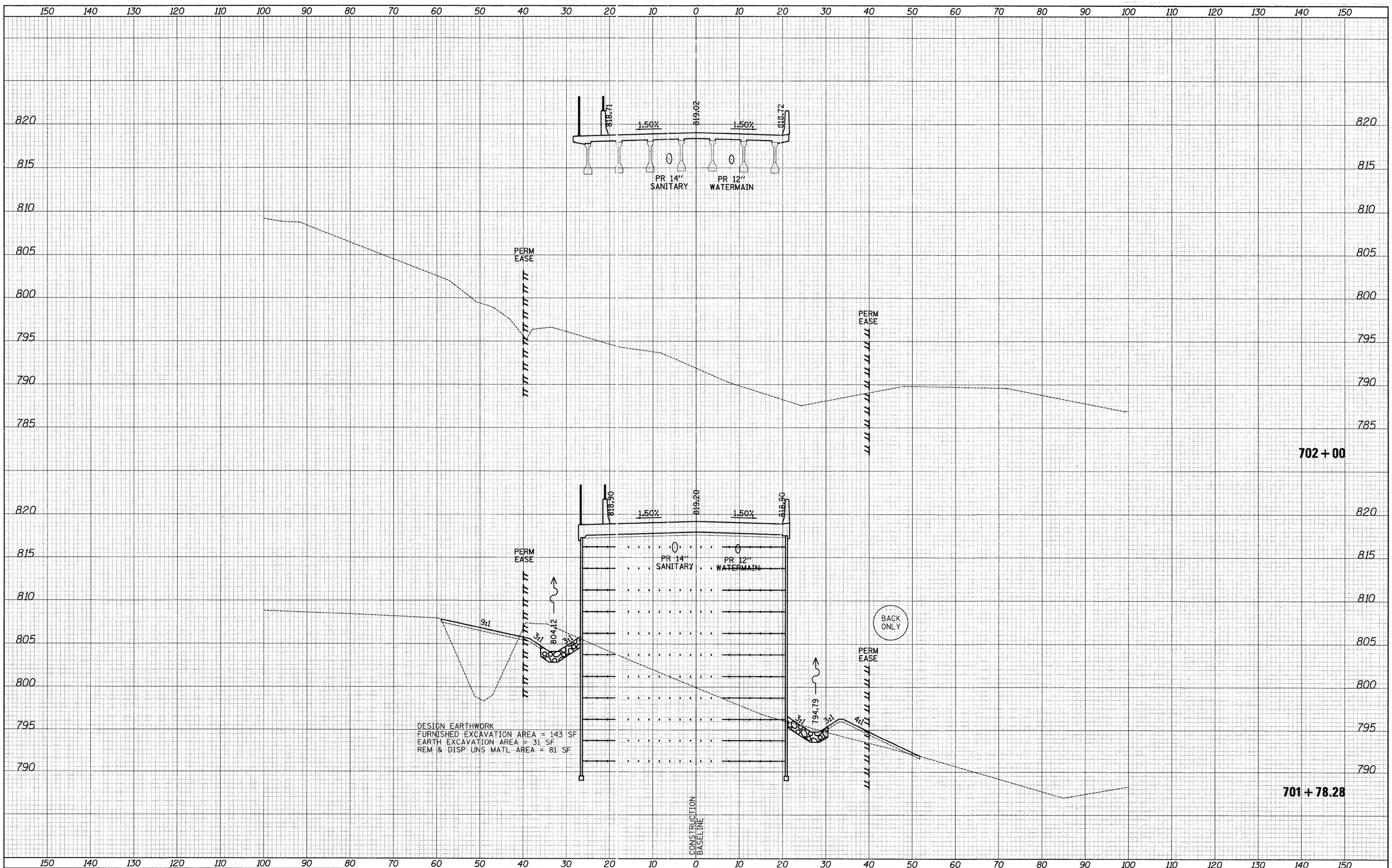

FINAL SURVEY — NOTE BOOK — NO. — SURVEYED — PLOTTED — DRAWN — AREAS — CHECKED — BY — DATE

ORIGINAL SURVEY — NOTE BOOK — NO. — SURVEYED — PLOTTED — DRAWN — AREAS — CHECKED — BY — DATE

CIVILTECH
450 E Devon Ave, Suite 300
Itasca, Illinois 60143
Tel: 630.773.3900 Fax: 630.773.3975
www.civiltechinc.com

DESIGNED	- PK	REVISED	-
DRAWN	- PK	REVISED	-
CHECKED	- RTM	REVISED	-
DATE	- 3/25/2011	REVISED	-

STATE OF ILLINOIS
DEPARTMENT OF TRANSPORTATION

VERT. 0 5 10
HORIZ. 0 10 20

CROSS SECTIONS – UMBDENSTOCK ROAD

SHEET NO. 2 OF 6 SHEETS | STA. 701+78.28 | TO STA. 702+00

F.A.P. RTE.	SECTION	COUNTY	TOTAL SHEETS	SHEET NO.
361	06-00214-27-BR	KANE	87	83
		CONTRACT NO. 63595		
FED. ROAD DIST. NO. 1	ILLINOIS	FED. AID PROJECT		

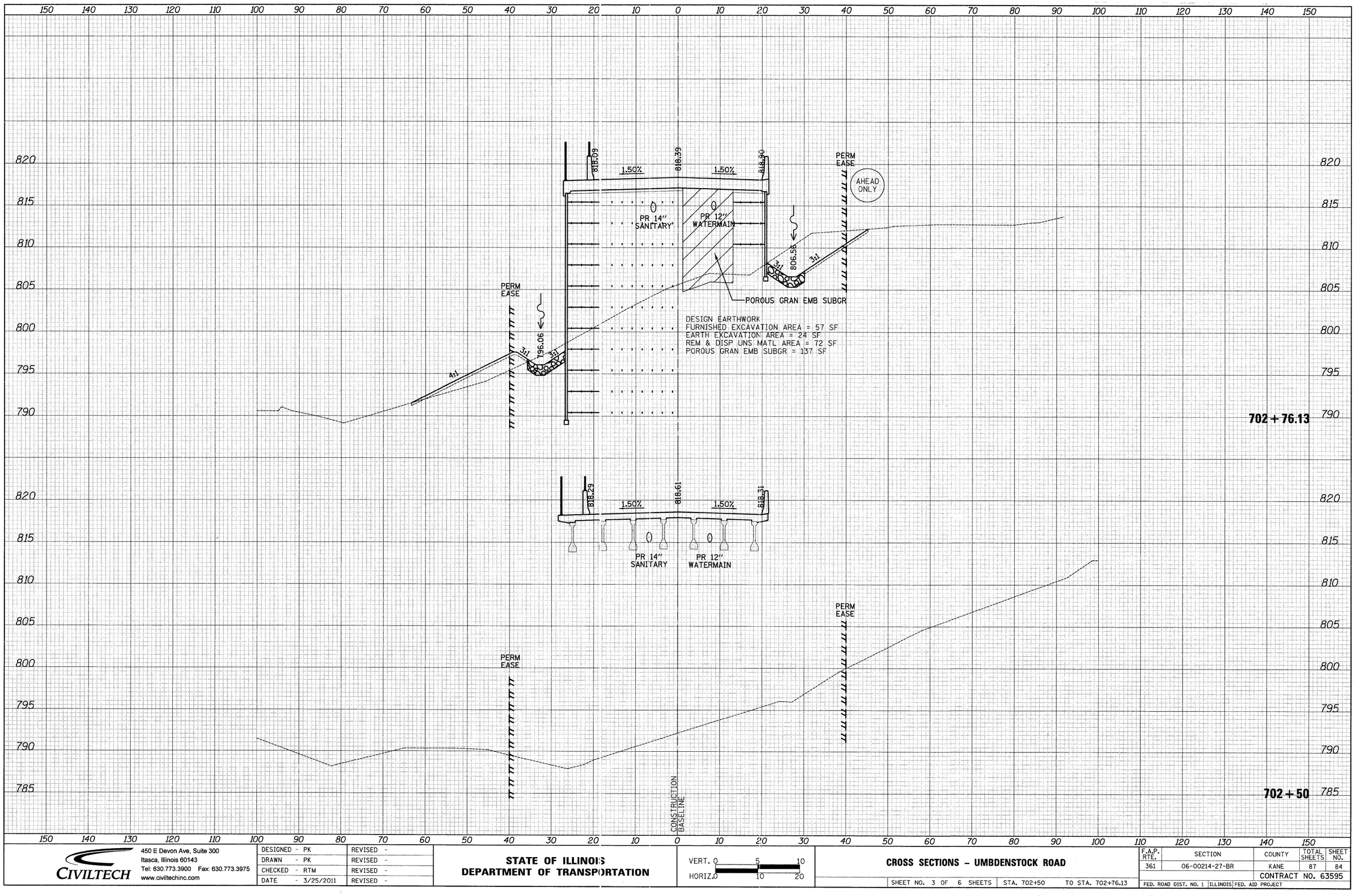

FINAL SURVEY	BY	DATE
NOTE BOOK	SURVEYED	
NO.	PLOTTED	
	TYPE RATE	
	AREAS	
	AREAS CHECKED	

ORIGINAL SURVEY	BY	DATE
NOTE BOOK	SURVEYED	
NO.	PLOTTED	
	TYPE RATE	
	AREAS	
	AREAS CHECKED	

CIVILTECH
450 E Devon Ave, Suite 300
Itasca, Illinois 60143
Tel: 630.773.3900 Fax: 630.773.3975
www.civiltechinc.com

DESIGNED	- PK	REVISED -
DRAWN	- PK	REVISED -
CHECKED	- RTM	REVISED -
DATE	- 3/25/2011	REVISED -

STATE OF ILLINOIS
DEPARTMENT OF TRANSPORTATION

VERT. 0 5 10
HORIZ. 0 10 20

CROSS SECTIONS – UMBDENSTOCK ROAD

SHEET NO. 3 OF 6 SHEETS | STA. 702+50 | TO STA. 702+76.13

F.A.P. RTE.	SECTION	COUNTY	TOTAL SHEETS	SHEET NO.
361	06-00214-27-BR	KANE	87	84
		CONTRACT NO. 63595		
FED. ROAD DIST. NO. 1	ILLINOIS	FED. AID PROJECT		

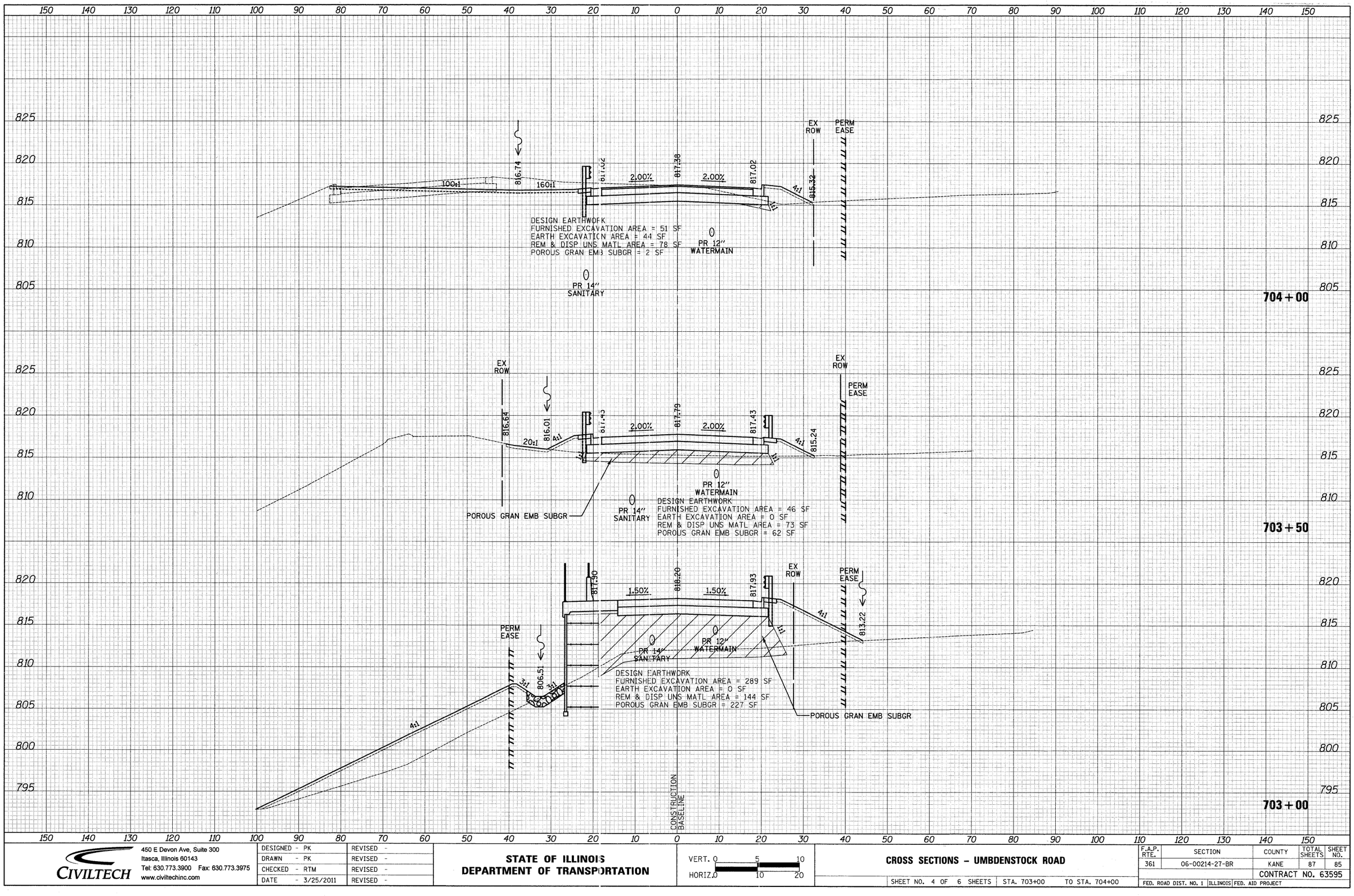

FINAL SURVEY — NOTE BOOK NO. — SURVEYED — PLOTTED — TEMPLATE — AREAS — AREAS CHECKED — BY — DATE

ORIGINAL SURVEY — NOTE BOOK NO. — SURVEYED — PLOTTED — TEMPLATE — AREAS — AREAS CHECKED — BY — DATE

CIVILTECH
450 E Devon Ave, Suite 300
Itasca, Illinois 60143
Tel: 630.773.3900 Fax: 630.773.3975
www.civiltechinc.com

DESIGNED - PK	REVISED -	
DRAWN - PK	REVISED -	
CHECKED - RTM	REVISED -	
DATE - 3/25/2011	REVISED -	

STATE OF ILLINOIS
DEPARTMENT OF TRANSPORTATION

VERT. 0 5 10
HORIZ. 0 10 20

CROSS SECTIONS - UMBDENSTOCK ROAD

SHEET NO. 4 OF 6 SHEETS | STA. 703+00 TO STA. 704+00

F.A.P. RTE.	SECTION	COUNTY	TOTAL SHEETS	SHEET NO.
361	06-00214-27-BR	KANE	87	85

CONTRACT NO. 63595

FED. ROAD DIST. NO. 1 | ILLINOIS | FED. AID PROJECT

FINAL SURVEY	DATE	BY
SURVEYED		
PLOTTED		
NOTE BOOK		
NO.	AREAS CHECKED	

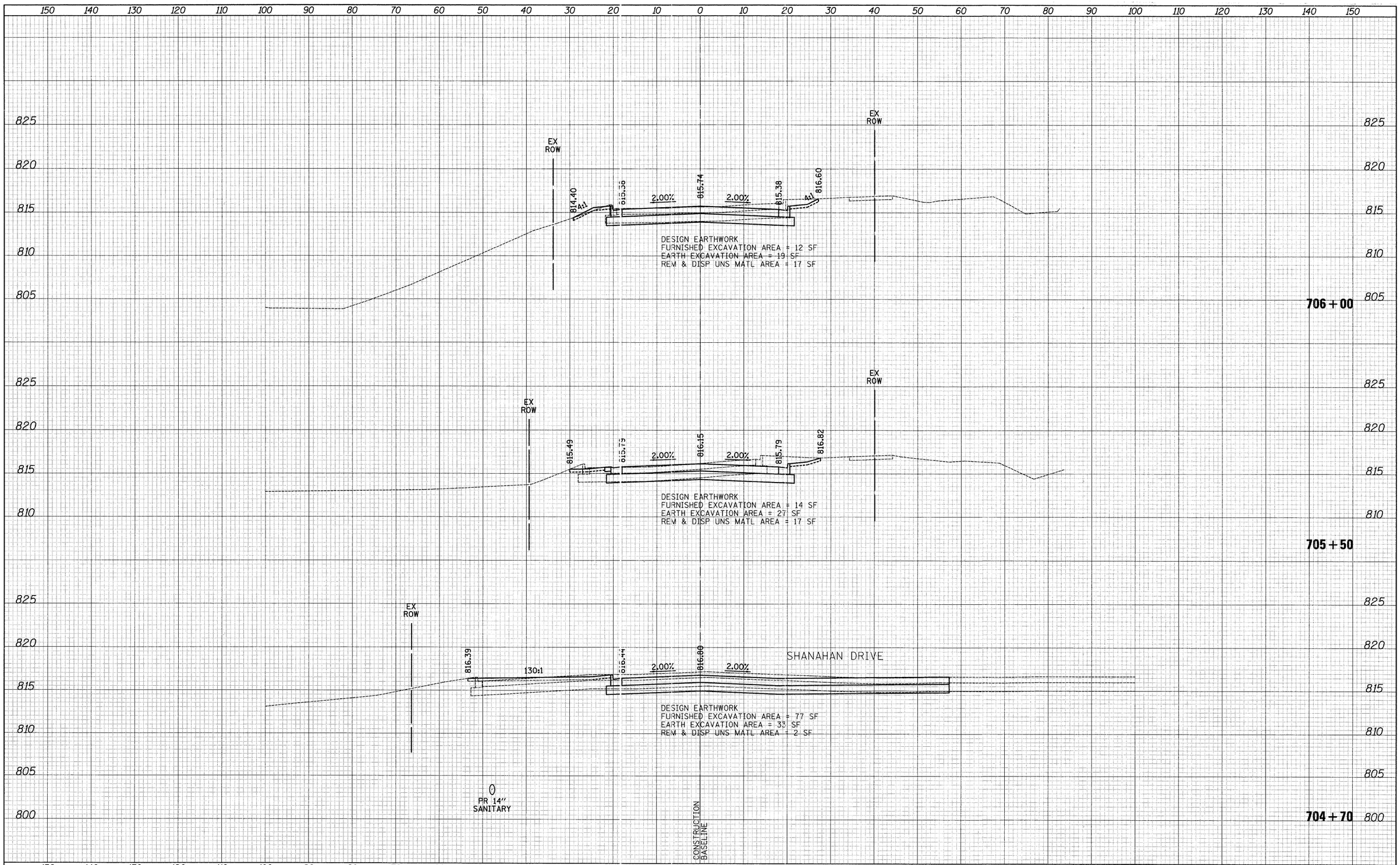

ORIGINAL SURVEY	DATE	BY
SURVEYED		
PLOTTED		
NOTE BOOK		
NO.	AREAS CHECKED	

CIVILTECH
450 E Devon Ave, Suite 300
Itasca, Illinois 60143
Tel: 630.773.3900 Fax: 630.773.3975
www.civiltechinc.com

DESIGNED - PK	REVISED -	
DRAWN - PK	REVISED -	
CHECKED - RTM	REVISED -	
DATE - 3/25/2011	REVISED -	

STATE OF ILLINOIS
DEPARTMENT OF TRANSPORTATION

VERT. 0 5 10
HORIZ. 0 10 20

CROSS SECTIONS – UMBDENSTOCK ROAD

SHEET NO. 5 OF 6 SHEETS | STA. 704+70 | TO STA. 706+00

F.A.P. RTE.	SECTION	COUNTY	TOTAL SHEETS	SHEET NO.
361	06-00214-27-BR	KANE	87	86
		CONTRACT NO. 63595		
FED. ROAD DIST. NO. 1	ILLINOIS	FED. AID PROJECT		

FINAL SURVEY	DATE
SURVEYED	
PLOTTED	
TEMPLATE	
NOTE BOOK	
AREAS	
AREAS CHECKED	
NO.	BY

ORIGINAL SURVEY	DATE
SURVEYED	
PLOTTED	
TEMPLATE	
NOTE BOOK	
AREAS	
AREAS CHECKED	
NO.	BY

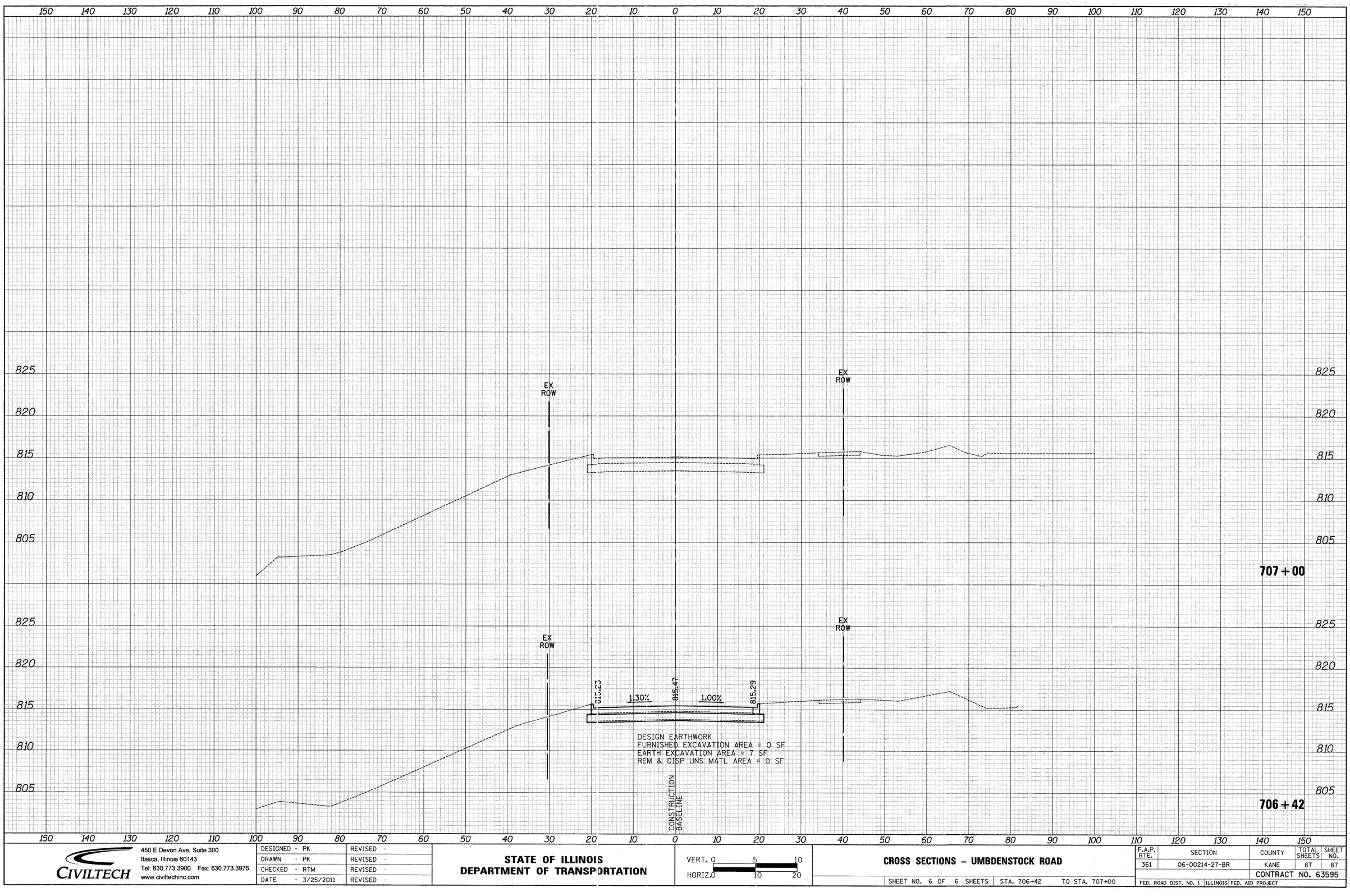

CIVILTECH
450 E Devon Ave, Suite 300
Itasca, Illinois 60143
Tel: 630.773.3900 Fax: 630.773.3975
www.civiltechinc.com

DESIGNED	- PK	REVISED	-
DRAWN	- PK	REVISED	-
CHECKED	- RTM	REVISED	-
DATE	- 3/25/2011	REVISED	-

STATE OF ILLINOIS
DEPARTMENT OF TRANSPORTATION

VERT. 0 5 10
HORIZ. 0 10 20

CROSS SECTIONS – UMBDENSTOCK ROAD

SHEET NO. 6 OF 6 SHEETS | STA. 706+42 | TO STA. 707+00

F.A.P. RTE.	SECTION	COUNTY	TOTAL SHEETS	SHEET NO.
361	06-00214-27-BR	KANE	87	87
		CONTRACT NO. 63595		

FED. ROAD DIST. NO. 1 | ILLINOIS | FED. AID PROJECT