F.A.P. RTE.	SECTION	COUNTY	TOTAL SHEETS	SHEET NO.
68	(6 B-1)I	LASALLE	20	1
	ILLINOIS	CONTRACT NO. 66937		

INDEX OF SHEETS 06-17-11 LETTING ITEM 226

1. COVER SHEET
2. GENERAL NOTES
3. SUMMARY OF QUANTITIES
4. TYPICAL ROADWAY SECTION
5. TEMPORARY CONCRETE BARRIER DETAILS
6 - 7. TRAFFIC CONTROL AND PROTECTION, STANDARD 701423
8. ROADWAY PLAN DETAILS
9 - 20. STRUCTURE PLANS

STANDARDS

000001-06	STANDARD SYMBOLS, ABBREVIATIONS AND PATTERNS
001006	DECIMAL OF AN INCH AND OF A FOOT
701001-02	OFF-ROAD OPERATIONS 2L, 2W, MORE THAN 15' (4.5 m) AWAY
701006-03	OFF-ROAD OPERATIONS 2L, 2W, 15' (4.5 m) TO 24" (600 mm) FROM PAVEMENT EDGE
701201-04	LANE CLOSURE, 2L, 2W, DAY ONLY, FOR SPEEDS ≥ 45 MPH
701301-04	LANE CLOSURE, 2L, 2W, SHORT TIME OPERATIONS
701311-03	LANE CLOSURE, 2L, 2W, MOVING OPERATIONS - DAY ONLY
701423-04	LANE CLOSURE, MULTILANE, WITH BARRIER, FOR SPEEDS ≥ 45 MPH TO 55 MPH
701901-01	TRAFFIC CONTROL DEVICES
704001-06	TEMPORARY CONCRETE BARRIER

STATE OF ILLINOIS
DEPARTMENT OF TRANSPORTATION
DIVISION OF HIGHWAYS

PROPOSED HIGHWAY PLANS

FAP 68 (IL 23)
SECTION (6 B-1)I

BRIDGE REPAIRS
LASALLE COUNTY

C-93-073-09

D-93-002-09

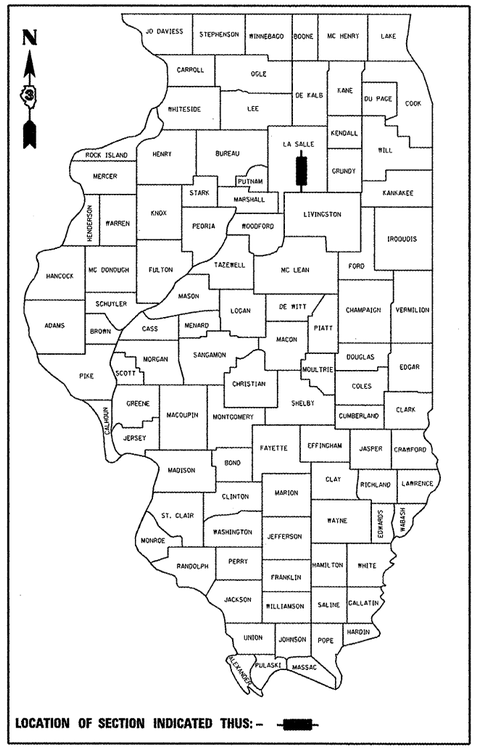

LOCATION OF SECTION INDICATED THUS:-

FUNCTIONAL CLASSIFICATION
OTHER PRINCIPAL ARTERIAL
2009 ADT = 8000
P.V. = 94.4%
S.U. = 2.8%
M.U. = 2.8%

PROJECT LOCATION
SN 050-0160
CARRYING FAP 68 (IL 23) OVER
OTTER CREEK 2.8 MILES NORTH OF IL 18

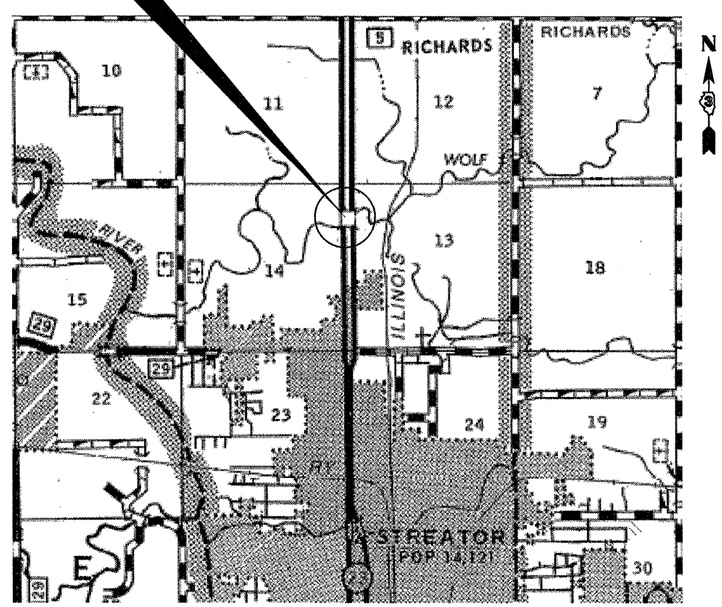

POINT LOCATION

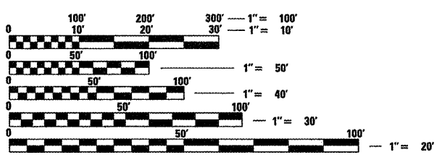

FULL SIZE PLANS HAVE BEEN PREPARED USING STANDARD ENGINEERING SCALES. REDUCED SIZED PLANS WILL NOT CONFORM TO STANDARD SCALES. IN MAKING MEASUREMENTS ON REDUCED PLANS, THE ABOVE SCALES MAY BE USED.

J.U.L.I.E.
JOINT UTILITY LOCATION INFORMATION FOR EXCAVATION
1-800-892-0123
OR 811

STATE OF ILLINOIS
DEPARTMENT OF TRANSPORTATION
DIVISION OF HIGHWAYS

SUBMITTED 4/7 20 11
Eric S. Thorkeldson
DEPUTY DIRECTOR OF HIGHWAYS, REGION ENGINEER
May 13 20 11
Scott E. Stitt, P.E.
acting ENGINEER OF DESIGN AND ENVIRONMENT
May 13 20 11
Christine M. Reed
DIRECTOR OF HIGHWAYS, CHIEF ENGINEER

PROJECT ENGINEER: JOE KANNEL
UNIT CHIEF: RON WOODSHANK
TOWNSHIP: BRUCE

CONTRACT NO. 66937

PRINTED BY THE AUTHORITY OF THE STATE OF ILLINOIS

GENERAL NOTES

PLAN DIMENSIONS AND DETAILS RELATIVE TO EXISTING PLANS ARE SUBJECT TO NOMINAL CONSTRUCTION VARIATIONS. THE CONTRACTOR SHALL FIELD VERIFY EXISTING DIMENSIONS AND DETAILS AFFECTING NEW CONSTRUCTION AND MAKE NECESSARY APPROVED ADJUSTMENTS PRIOR TO CONSTRUCTION OR ORDERING OF MATERIALS. SUCH VARIATIONS SHALL NOT BE CAUSE FOR ADDITIONAL COMPENSATION FOR A CHANGE IN SCOPE OF WORK; HOWEVER, THE CONTRACTOR WILL BE PAID FOR THE QUANTITY ACTUALLY FURNISHED AT THE UNIT PRICE BID FOR THE WORK.

THE THICKNESS OF HMA SHOWN ON THE PLANS IS THE NOMINAL THICKNESS. DEVIATIONS FROM THE NOMINAL THICKNESS WILL BE PERMITTED WHEN SUCH DEVIATIONS OCCUR DUE TO IRREGULARITIES IN THE EXISTING SURFACE OR BASE ON WHICH THE HMA IS PLACED.

THE ENGINEER WILL BE THE SOLE JUDGE CONCERNING CURING TIME FOR THE VARIOUS HMA LIFTS.

FOR STABILIZATION, ALL TYPE III BARRICADES SHALL REQUIRE A MINIMUM OF FOUR SAND BAGS PER BARRICADE.

SHORT TERM PAVEMENT MARKING SHALL BE USED TO OUTLINE THE CENTERLINE OF PAVEMENT ONLY.

ON EXISTING PAVEMENT WHICH MAY BE SUPERELEVATED, THE NEW HMA PAVEMENT SHALL BE BUILT WITH THE SAME SUPERELEVATION UNLESS NEW SUPERELEVATION RATES ARE GIVEN ON THE PLANS.

ANY REFERENCE TO A STANDARD IN THESE PLANS SHALL BE INTERPRETED TO MEAN THE EDITION AS INDICATED BY THE SUBNUMBER SHOWN IN THE LIST OF STANDARDS OR THE COPY INCLUDED IN THESE PLANS.

THE FOLLOWING RATES OF APPLICATION HAVE BEEN USED IN CALCULATING PLAN QUANTITIES:

BITUMINOUS MATERIALS (PRIME COAT)	0.08	GAL / SQ YD
FOR ADDITIONAL HMA LIFTS "FOG COAT"	0.05	GAL / SQ YD
AGGREGATE PRIME COAT	0.002	TONS / SQ YD
HMA RESURFACING	112	LBS / SQ YD / IN
SHORT TERM PAVEMENT MARKING	10	FT /100 FT OF APPLICATION

MIXTURES TABLE

	LOCATION
	HMA SURFACE
PG GRADE	PG 64-22
DESIGN AIR VOIDS	4.0% @ N50
MIXTURE COMPOSITION	IL 9.5
FRICTION AGGREGATE	MIXTURE D
DENSITY TEST METHOD	SATISFACTION OF ENGINEER

COMMITMENTS

NONE: 3/23/2010

DATE: 4/7/2011

PREPARED BY: Dave Brovcak Jr
DISTRICT STUDIES & PLANS ENGINEER

EXAMINED BY:
DISTRICT CONSTRUCTION ENGINEER

Wayne L. Thomas
DISTRICT MATERIALS ENGINEER

DISTRICT OPERATIONS ENGINEER

CODE NO.	ITEM	UNIT	TOTAL QUANTITY	CONSTRUCTION CODE STATE FUNDS 100% STATE STRUCTURE 0014 RURAL
40600100	BITUMINOIS MATERIALS (PRIME COAT)	GAL	129	129
40603335	HOT-MIX ASPHALT SURFACE CSE. MIX D, N50	TON	211	211
44000155	HOT-MIX ASPHALT SURFACE REMOVAL 1 1/2"	SQ YD	1607	1607
44000500	COMBINATION CONCRETE CURB AND GUTTER REMOVAL	FOOT	56	56
50102400	CONCRETE REMOVAL	CU YD	27.1	27.1
50300255	CONCRETE SUPERSTRUCTURE	CU YD	27	27
50300300	PROTECTIVE COAT	SQYD	181	181
50500405	FURNISHING AND ERECTING STRUCTURAL STEEL	POUND	4490	4490
50800205	REINFORCEMENT BARS, EPOXY COATED	POUND	4010	4010
50800515	BAR SPLICERS	EACH	48	48
52000110	PREFORMED JOINT STRIP SEAL	FOOT	188	188
52100010	ELASTOMERIC BEARING ASSEMBLY, TYPE I	EACH	14	14
52100020	ELASTOMERIC BEARING ASSEMBLY, TYPE II	EACH	14	14
52100520	ANCHIOR BOLTS 1"	EACH	56	56
58100200	WATERPROOFING MEMBRANE SYSTEM	SQ YD	960	960
60605100	COMBINATION CONCRETE CURB AND GUTTER, TYPE B-6.24 (ABUTTING EXISTING PAVEMENT)	FOOT	56	56
67100100	MOBILIZATION	L SUM	1	1
70400100	TEMPORARY CONCRETE BARRIER	FOOT	633	633
70400200	RELOCATE TEMPORARY CONCRETE BARRIER	FOOT	1114	1114
* 78005110	EPOXY PAVEMENT MARKING, LINE 4"	FOOT	2132	2132
* 78005130	EPOXY PAVEMENT MARKING, LINE 6"	FOOT	800	800
78300100	PAVEMENT MARKING REMOVAL	SQ FT	2304	2304
X0325598	DRAINAGE SCUPPER DS-12M10	EACH	2	2
70100325	TRAFFIC CONTROL AND PROTECTION, STANDARD 701423	EACH	1	1
Z0021904	SILICONE JOINT SEALER, 1"	FOOT	130	130
Z0001899	JACK AND REMOVE EXISTING BEARINGS	EACH	28	28
Z0016001	DECK SLAB REPAIR (FULL DEPTH, TYPE I)	SQYD	20	20
Z0004556	HOT-MIX ASPHALT SURFACE REMOVAL (DECK)	SQ YD	960	960
Z0016002	DECK SLAB REPAIR (FULL DEPTH, TYPE II)	SQYD	20	20
~~Z0012750~~	~~CONCRETE MEDIAN REPAIR~~	~~SQ FT~~	~~68~~	~~68~~
Z0012754	STRUCTURAL REPAIR OF CONCRETE (DEPTH EQUAL TO OR LESS THAN 5")	SQ FT	50	50
Z0012755	STRUCTURAL REPAIR OF CONCRETE (DEPTH GREATER THAN 5")	SQFT	68	68
Z0030250	IMPACT ATTENUATORS, TEMPORARY (NON- REDIRECTIVE), TEST LEVEL 3	EACH	2	2
Z0030330	IMPACT ATTENUATORS, RELOCATE (FULLY REDIRECTIVE), TEST LEVEL 3	EACH	2	2

*SPECIALTY ITEMS

Rev.

FILE NAME = c:\pw_work\pwidot\woodshankrl\d0257390\I366937-details.dgn	USER NAME = woodshankrl	DESIGNED - RLW	REVISED -
		DRAWN - RLW	REVISED -
	PLOT SCALE = 100.0000 ' / IN.	CHECKED -	REVISED -
	PLOT DATE = Apr 08, 2011 - 01:05:10 PM	DATE -	REVISED -

STATE OF ILLINOIS
DEPARTMENT OF TRANSPORTATION

SUMMARY OF QUANTITIES

SCALE: | SHEET NO. 1 OF 1 SHEETS | STA. | TO STA.

F.A.P. RTE.	SECTION	COUNTY	TOTAL SHEETS	SHEET NO.
68	(6B-1)1	LASALLE	20	3

CONTRACT NO. 66937

ILLINOIS FED. AID PROJECT

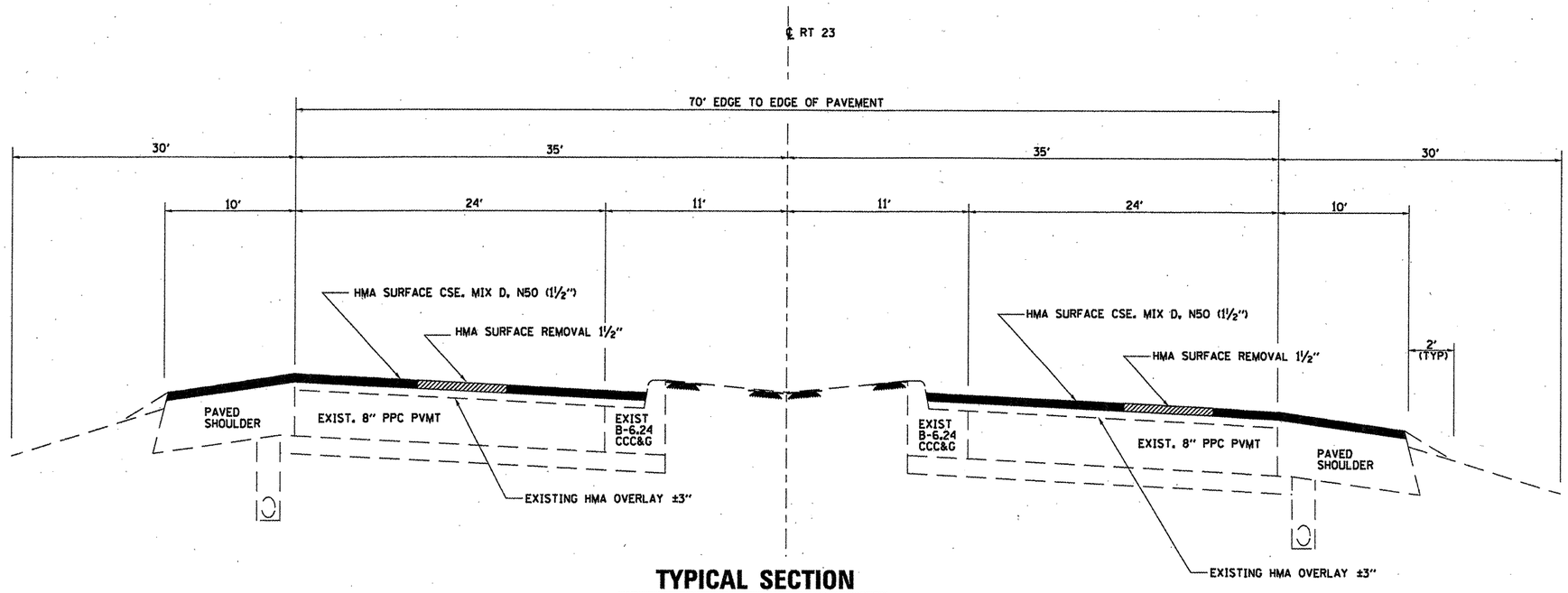

TYPICAL SECTION

*STA. 140+43 TO STA. 141+43
*STA. 142+73 TO STA. 143+73

*STATIONS TAKEN ALONG ℄ OF FAP RTE. 68 (IL 23)

FILE NAME = c:\pw_work\pwidot\woodshenkrl\d0257398\D366937-details.dgn	USER NAME = woodshenkrl	DESIGNED - RLW	REVISED -	STATE OF ILLINOIS DEPARTMENT OF TRANSPORTATION	TYPICAL SECTION	F.A.P. RTE.	SECTION	COUNTY	TOTAL SHEETS	SHEET NO.
	PLOT SCALE = 100.0000 ' / IN.	DRAWN - RLW	REVISED -			68	(6B-1)1	LASALLE	20	4
	PLOT DATE = Apr 08, 2011 - 01:05:23 PM	CHECKED -	REVISED -					CONTRACT NO. 66937		
		DATE -	REVISED -		SCALE: SHEET NO. 1 OF 1 SHEETS STA. TO STA.			ILLINOIS FED. AID PROJECT		

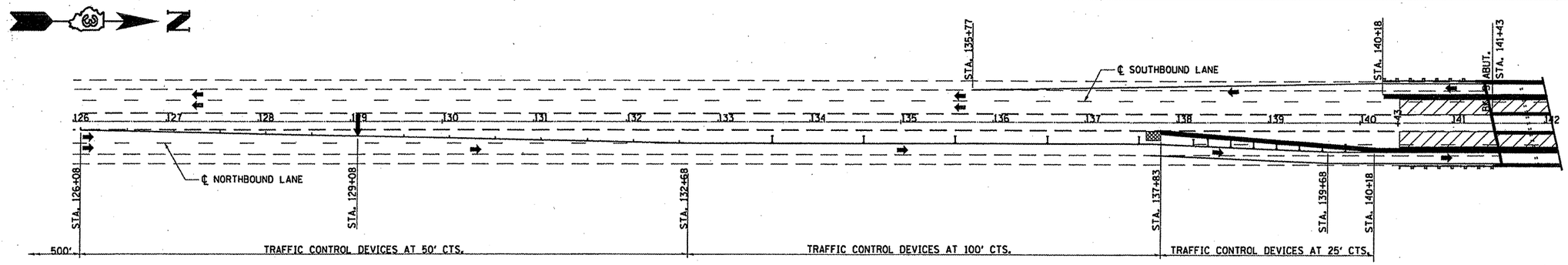

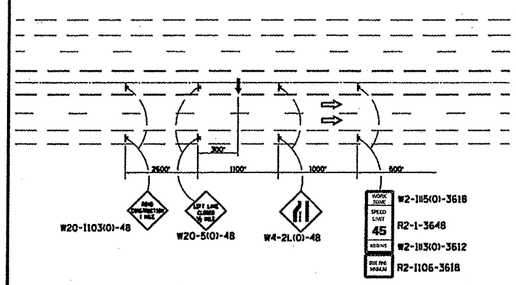

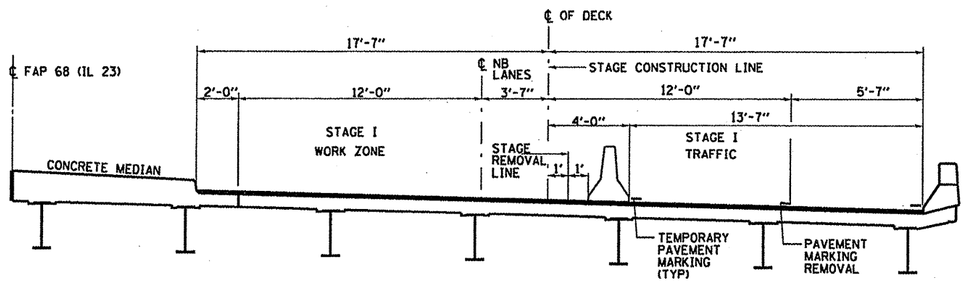

CROSS SECTION - NORTHBOUND LANE STAGE I SHOWN

(SOUTHBOUND SIMILAR. THRU 180° ROTATION ABOUT ℄ OF FAP 68)

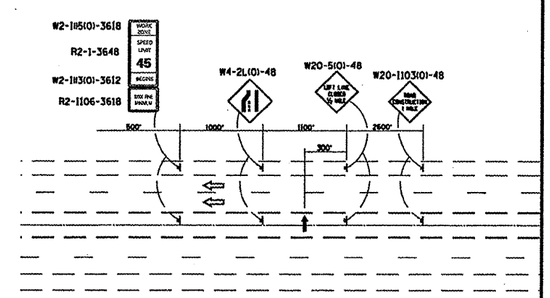

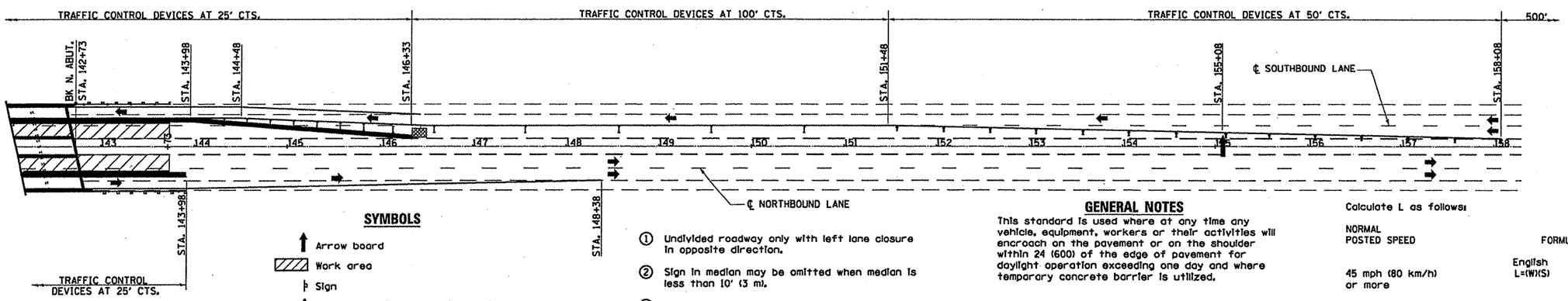

SYMBOLS

- Arrow board
- Work area
- Sign
- Direction indicator barricade with steady burn monodirectional light
- Type II barricade, drum, or vertical barricade with steady burn monodirectional light
- Temporary concrete barrier
- Monodirectional barrier wall/guardrail marker
- Impact attenuator

1. Undivided roadway only with left lane closure in opposite direction.
2. Sign in median may be omitted when median is less than 10' (3 m).
3. Temporary pavement marking tape shall be placed throughout the taper and along-side the work area. The right edge line shall be white and the left edge line shall be yellow.
4. Barrier wall/guardrail markers at 25' (7.6 m). Markers on right shall be crystal and markers on left shall be amber. See Standards 704001 and 635001.
5. Verticle barricades shall not be used in lane shift taper.

GENERAL NOTES

This standard is used where at any time any vehicle, equipment, workers or their activities will encroach on the pavement or on the shoulder within 24 (600) of the edge of pavement for daylight operation exceeding one day and where temporary concrete barrier is utilized.

BILL OF MATERIAL

ITEM	UNIT	QUANTITY
TEMPORARY CONCRETE BARRIER	FOOT	1230
IMPACT ATTENUATORS, TEMPORARY (NON-REDIRECTIVE, TEST LEVEL 3)	FOOT	2

Calculate L as follows:

NORMAL POSTED SPEED	FORMULAS English	FORMULAS (Metric)
45 mph (80 km/h) or more	L=(W)(S)	L=0.65(W)(S)

W = Width of offset in feet (meters).

S = Normal posted speed in mph (km/h).

All dimensions are in inches (millimeters) unless otherwise shown.

FILE NAME = c:\pw_work\pwidot\patelyj\d0257398\D366537-details.dgn	USER NAME = patelyj	DESIGNED -	REVISED -
		DRAWN -	REVISED -
	PLOT SCALE = 100.0000 ' / in.	CHECKED -	REVISED -
	PLOT DATE = 5/19/2011	DATE -	REVISED -

STATE OF ILLINOIS
DEPARTMENT OF TRANSPORTATION

TRAFFIC CONTROL AND PROTECTION STANDARD 701423

SCALE: | SHEET NO. 1 OF 2 SHEETS | STA. TO STA.

F.A.P. RTE.	SECTION	COUNTY	TOTAL SHEETS	SHEET NO.
68	(6B-1)I	LASALLE	20	5
		CONTRACT NO. 66937		
		ILLINOIS FED. AID PROJECT		

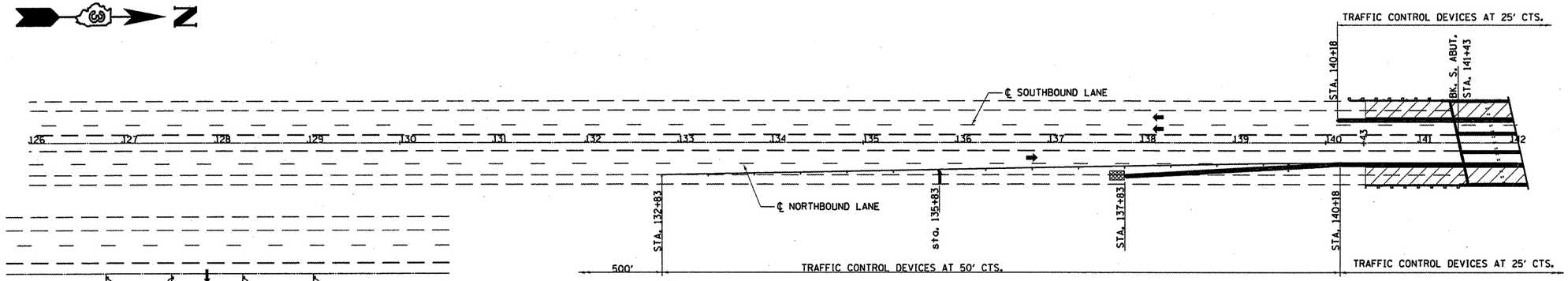

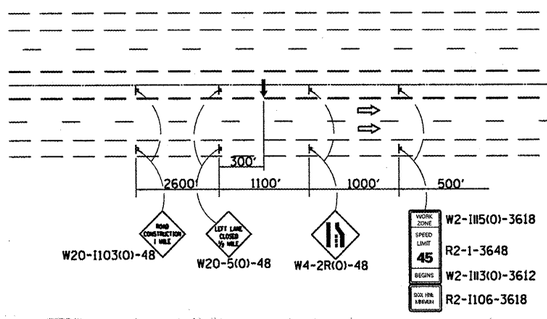

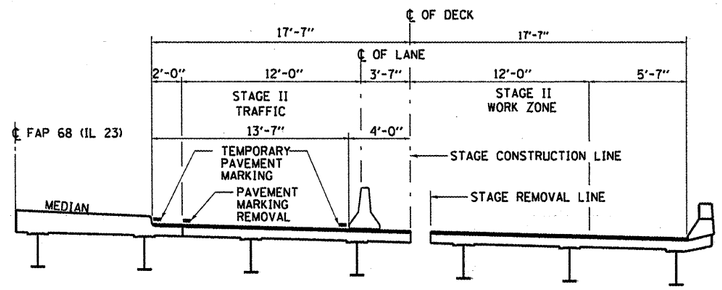

CROSS SECTION - NORTHBOUND LANE STAGE II SHOWN

(SOUTHBOUND SIMILAR. THRU 180° ROTATION ABOUT ℄ OF FAP 68)

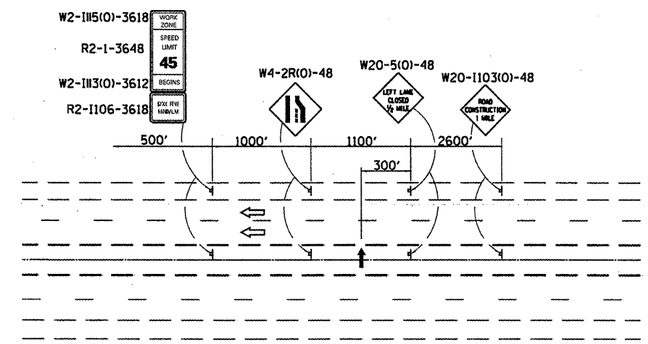

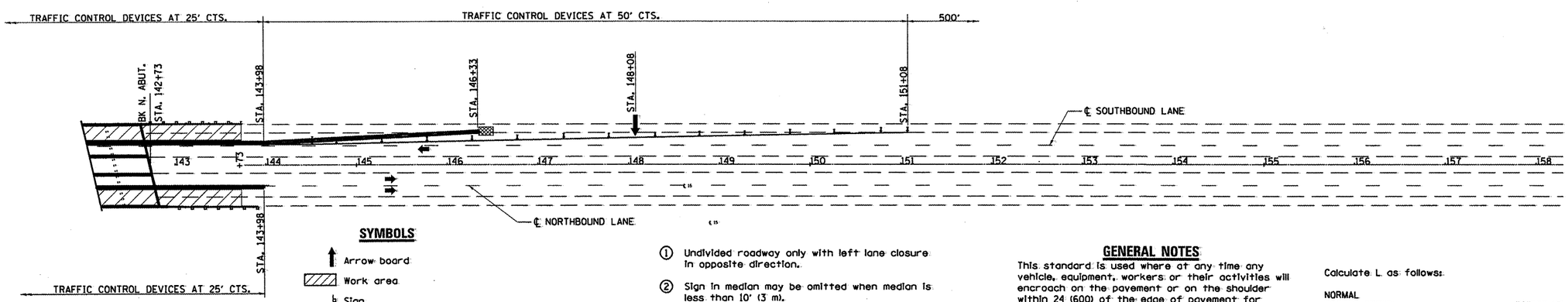

SYMBOLS

- Arrow board
- Work area
- Sign
- Direction indicator barricade with steady burn monodirectional light
- Type II barricade, drum, or vertical barricade with steady burn monodirectional light
- Temporary concrete barrier
- Monodirectional barrier wall/guardrail marker
- Impact attenuator

1. Undivided roadway only with left lane closure in opposite direction.
2. Sign in median may be omitted when median is less than 10' (3 m).
3. Temporary pavement marking tape shall be placed throughout the taper and along-side the work area. The right edge line shall be white and the left edge line shall be yellow.
4. Barrier wall/guardrail markers at 25' (7.6 m). Markers on right shall be crystal and markers on left shall be amber. See Standards 704001 and 635001.
5. Verticle barricades shall not be used in lane shift taper.

GENERAL NOTES

This standard is used where at any time any vehicle, equipment, workers or their activities will encroach on the pavement or on the shoulder within 24 (600) of the edge of pavement for daylight operation exceeding one day and where temporary concrete barrier is utilized.

BILL OF MATERIAL

ITEM	UNIT	QUANTITY
RELOCATE TEMPORARY CONCRETE BARRIER	FOOT	1230
IMPACT ATTENUATORS, RELOCATE (NON-REDIRECTIVE, TEST LEVEL 3)	FOOT	2

Calculate L as follows:

NORMAL POSTED SPEED	FORMULAS English	FORMULAS (Metric)
45 mph (80 km/h) or more	L=(W)(S)	L=0.65(W)(S)

W = Width of offset in feet (meters).

S = Normal posted speed in mph (km/h).

All dimensions are in inches (millimeters) unless otherwise shown.

FILE NAME = c:\pw_work\pwidot\patelyj\d0257390\D366937-details.dgn	USER NAME = patelyj	DESIGNED -	REVISED -
		DRAWN -	REVISED -
	PLOT SCALE = 100.0000 ' / in.	CHECKED -	REVISED -
	PLOT DATE = 5/18/2011	DATE -	REVISED -

STATE OF ILLINOIS
DEPARTMENT OF TRANSPORTATION

TRAFFIC CONTROL AND PROTECTION STANDARD 701423 – STAGE II

SCALE: ____ SHEET NO. 2 OF 2 SHEETS STA. ____ TO STA. ____

F.A.P. RTE.	SECTION	COUNTY	TOTAL SHEETS	SHEET NO.
68	(6B-1)I	LASALLE	20	6
		CONTRACT NO. 66937		
		ILLINOIS FED. AID PROJECT		

D366937-details.dgn 5/18/2011 11:53:40 AM User=patelyj

When "A" is 3'-6" or less, the temporary concrete barrier shall be anchored to the new slab according to Detail I or Detail II. No anchorage is required when "A" is greater than 3'-6".

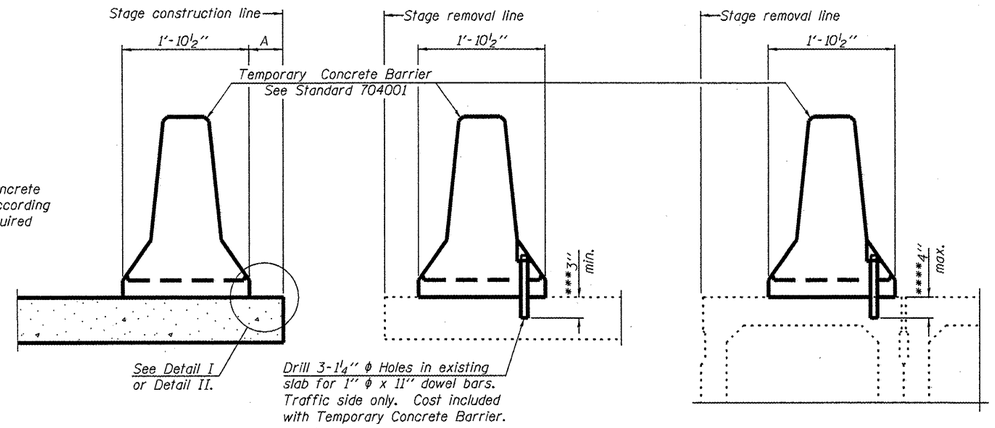

NEW SLAB

EXISTING SLAB

EXISTING DECK BEAM

SECTIONS THRU SLAB OR DECK BEAM

NOTES

Detail I - With Bar Splicer or Couplers:
Connect one (1) 1" x 7" "x "W" steel ℙ to the top layer of couplers with 2-⅝" ϕ bolts screwed to coupler at approximate ℄ of each barrier panel.

Detail II - With Extended Reinforcement Bars:
Connect one (1) 1" x 7" x "W" steel ℙ to the concrete slab or concrete wearing surface with 2-⅝" ϕ Expansion Anchors or cast in place inserts spaced between the top layer of reinforcement at approximate ℄ of each barrier panel.

Cost of anchorage is included with Temporary Concrete Barrier.

The 1" x 7" x "W" plate shall not be removed until stage II construction forms and all reinforcement bars are in place and the concrete is ready to be placed.

*** Dimension shown is minimum required embedment into concrete. If hot-mix asphalt wearing surface is present, minimum embedment shall be in addition to wearing surface depth.

**** If existing deck beam is to remain in place after stage construction, embedment shall only be into wearing surface and not into existing deck beam concrete.

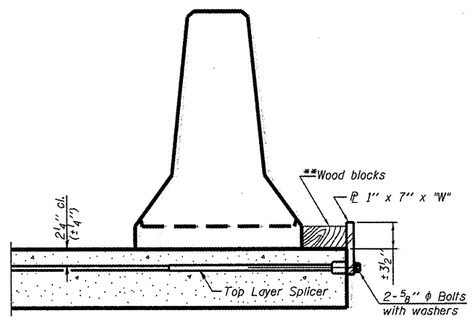

DETAIL I

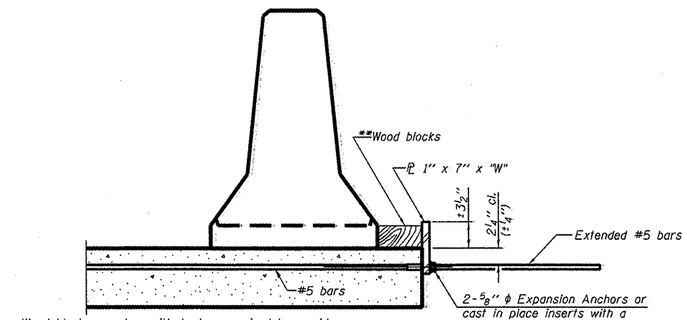

Wood blocks may be omitted when required to provide minimum stage traffic lane width. When the wood blocks are omitted, the concrete barrier shall be in direct contact with the steel retainer plate.

** "W" = Top bars spacing + 4"

DETAIL II

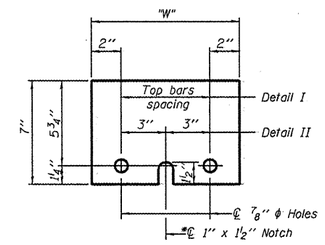

STEEL RETAINER ℙ 1" x 7" x "W"

* Required only with Detail II

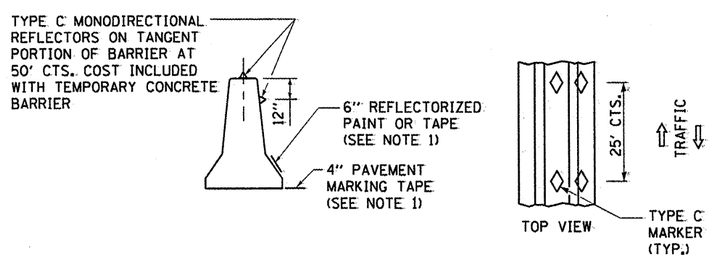

TEMPORARY CONCRETE BARRIER

FILE NAME = c:\pw_work\pwidot\patelyj\d0257390\D366937-details.dgn	USER NAME = patelyj	DESIGNED - RLW	REVISED -	STATE OF ILLINOIS DEPARTMENT OF TRANSPORTATION	TEMPORARY CONCRETE BARRIER FOR STAGE CONSTRUCTION	F.A.P. RTE.	SECTION	COUNTY	TOTAL SHEETS	SHEET NO.
		DRAWN - RLW	REVISED -			68	(6B-1)I	LASALLE	20	7
	PLOT SCALE = 100.0000 ' / in.	CHECKED -	REVISED -					CONTRACT NO. 66937		
	PLOT DATE = 5/18/2011	DATE -	REVISED -		SCALE: SHEET NO. 1 OF 1 SHEETS STA. TO STA.			ILLINOIS FED. AID PROJECT		

D366937-details.dgn 5/18/2011 11:54:04 AM User=patelyj

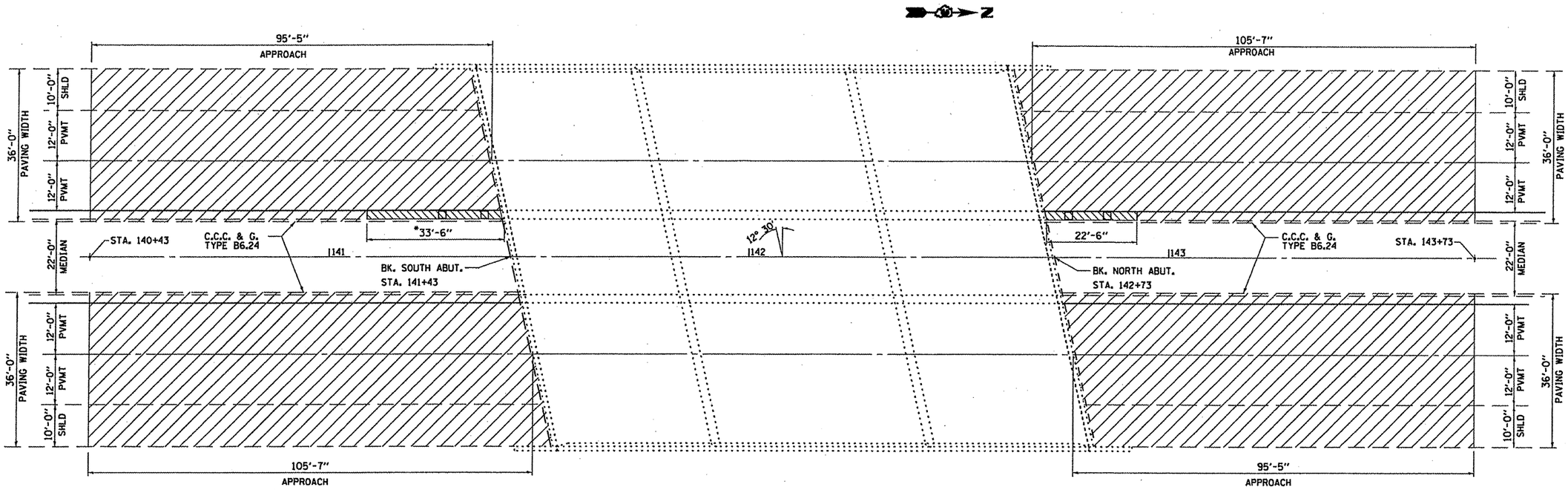

* EXISTING INLETS ARE TO REMAIN IN PLACE.

IF THE INLETS ARE DAMAGED DUE TO THE CONTRACTORS REMOVAL OPERATIONS, THEY SHALL BE REPAIRED OR REPLACED AT THE CONTRACTOR'S EXPENSE.

PLAN

HMA SURFACE REMOVAL 1 1/2"
BITUMINOUS PRIME COAT
HMA SURFACE CSE. MIX D, N50

REMOVE AND REPLACE CURB & GUTTER

FILE NAME = c:\pw_work\pwidot\patelyj\d0257398\D36937-details.dgn	USER NAME = patelyj	DESIGNED - RLW	REVISED -	STATE OF ILLINOIS DEPARTMENT OF TRANSPORTATION	ROADWAY PLAN DETAILS	F.A.P. RTE.	SECTION	COUNTY	TOTAL SHEETS	SHEET NO.
	PLOT SCALE = 100.0000 ' / in.	DRAWN - RLW	REVISED -			68	(6B-1)I	LASALLE	20	8
	PLOT DATE = 5/19/2011	CHECKED -	REVISED -					CONTRACT NO. 66937		
		DATE -	REVISED -		SCALE: SHEET NO. 1 OF 1 SHEETS STA. TO STA.			ILLINOIS FED. AID PROJECT		

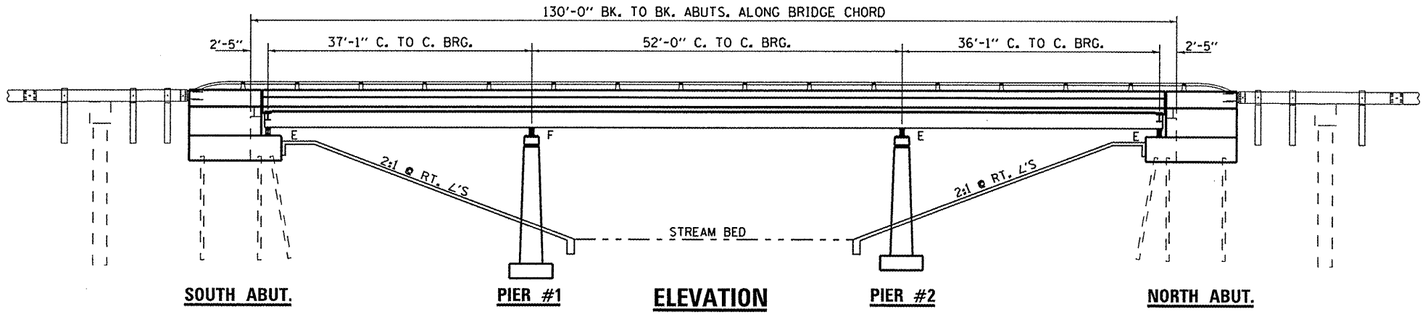

ELEVATION

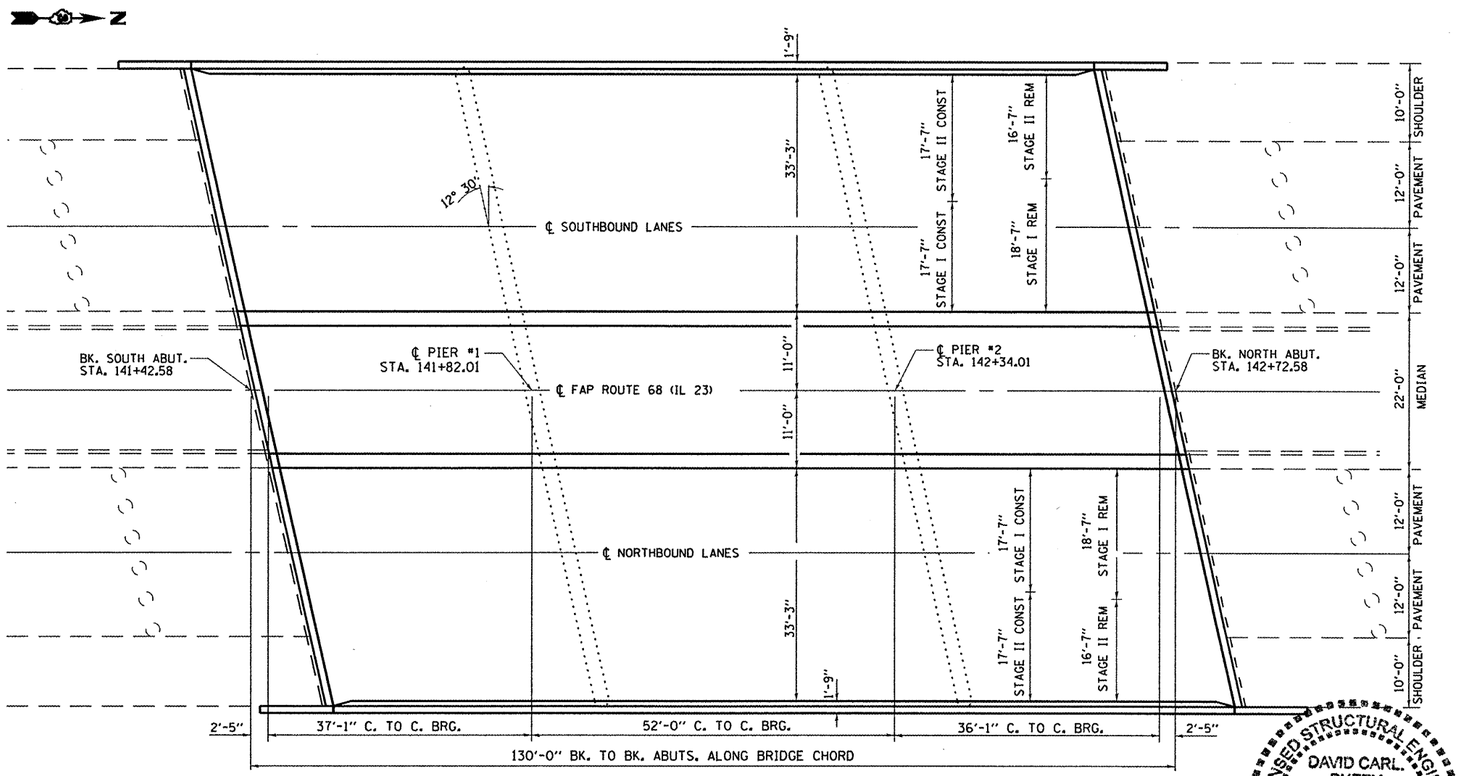

PLAN
S.N. 050–0160

GENERAL NOTES

NO FIELD WELDING IS PERMITTED EXCEPT AS SPECIFIED IN THE CONTRACT DOCUMENTS.

REINFORCEMENT BARS SHALL CONFORM TO THE REQUIREMENTS OF ASTM A 706 GR 60. SEE SPECIAL PROVISIONS.

PRIOR TO POURING THE NEW CONCRETE DECK, ALL HEAVY OR LOOSE RUST, LOOSE MILL SCALE, AND OTHER LOOSE OR POTENTIALLY DETRIMENTAL FOREIGN MATERIAL SHALL BE REMOVED FROM THE SURFACES IN CONTACT WITH CONCRETE. TIGHTLY ADHERED PAINT MAY REMAIN UNLESS OTHERWISE NOTED. REMOVAL SHALL BE ACCOMPLISHED BY METHODS THAT WILL NOT DAMAGE THE STEEL AND THE COST WILL BE INLCUDED IN THE PAY ITEM COVERING REMOVAL OF THE EXISTING CONCRETE.

EXISTING REINFORCEMENT BARS EXTENDING INTO THE REMOVAL AREA SHALL BE CLEANED, STRAIGHTENED AND INCORPORATED INTO THE NEW CONSTRUCTION. ANY REINFORCEMENT BARS THAT ARE DAMAGED DURING CONCRETE REMOVAL SHALL BE REPLACED WITH AN APPROVED BAR SPLICER OR ANCHORAGE SYSTEM. COST INCLUDED WITH CONCRETE REMOVAL.

AS DIRECTED BY THE ENGINEER, EXISTING CONSTRUCTION ACCESSORIES WELDED TO THE TOP FLANGE OF BEAMS AND GIRDERS SHALL BE REMOVED. THE WELD AREAS SHALL BE GROUND FLUSH AND INSPECTED FOR CRACKS USING MAGNETIC PARTICLE TESTING (MT) OR DYE PENETRANT TESTING (PT) BY QUALIFIED PERSONNEL APPROVED BY THE ENGINEER. ANY CRACKS THAT CANNOT BE REMOVED BY GRINDING 1/4" DEEP SHALL BE IDENTIFIED AND REPORTED TO THE BUREAU OF BRIDGES AND STRUCTURES FOR FURTHER DISPOSITION. THE COST OF REMOVING WELDED ACCESSORIES, GRINDING AND INSPECTING WELD AREAS AND GRINDING CRACKS WILL BE PAID FOR ACCORDING TO ARTICLE 109.04 OF THE STANDARD SPECIFICATIONS.

QUANTITIES OF DECK REPAIRS ARE ESTIMATED. THE ENGINEER SHALL SOUND THE ENTIRE DECK AREA AFTER ALL HMA SURFACE AND WATERPROOFING MEMBRANE MATERIALS HAVE BEEN REMOVED. THE ENGINEER SHALL ACTUAL LOCATIONS OF DECK REPAIRS ON "AS-BUILT" PLANS.

JOINT OPENING SHALL BE ADJUSTED ACCORDING TO ARTICLE 520.04 OF THE STANDARD SPECIFICATIONS WHEN THE DECK IS POURED AT AN AMBIENT TEMPERATURE OTHER THAN 50° F.

THE EXISTING STRUCTURAL STEEL COATING CONTAINS LEAD.

THE CONTRACTOR SHALL TAKE APPROPRIATE PRECAUTIONS TO DEAL WITH THE PRESENCE OF LEAD ON THIS PROJECT.

TWO 1/2 IN. ADJUSTING SHIMS SHALL BE PROVIDED FOR EACH BEARING IN ADDITION TO ALL OTHER PLATES OR SHIMS AND PLACED AS SHOWN ON BEARING DETAILS.

ALL (EMBEDDED AND SEPARATE) BEARING PLATES, SIDE RETAINERS, ANCHOR BOLTS, NUTS, WASHERS AND PINTLES SHALL BE GALVANIZED ACCORDING TO AASHTO M111 OR M232 AS APPLICABLE.

H.S. BOLTS IN BEARING ASSEMBLY SHALL BE GALVANIZED ACCORDING TO AASHTO M298 CLASS 50.

THE STRUCTURAL STEEL PLATES OF THE BEARING ASSEMBLY AND STEEL EXTENSION SHALL CONFORM TO THE REQUIREMENTS OF AASHTO M 270 GRADE 50.

TOTAL BILL OF MATERIAL

ITEM	UNIT	SUPER	SUB	TOTAL
Concrete Removal	Cu. Yd.	27.1		27.1
Concrete Superstructure	Cu. Yd.	27.0		27.0
Hot-Mix Asphalt Removal (Deck)	Sq. Yd.	960		960
HMA Surface CSE, Mix D, N50	Ton	211		211
Protective Coat	Sq Yd	181		181
Waterproofing Membrane System	Sq. Yd.	960		960
Furnishing and Erecting Structural Steel	Pound	4490		4490
Reinforcement Bars, Epoxy Coated	Pound	4010		4010
Bar Splicers	Each	48		48
Preformed Joint Strip Seal	Foot	188		188
Elastomeric Bearing Assembly, Type I	Each	14		14
Elastomeric Bearing Assembly, Type II	Each	14		14
Anchor Bolts, 1"	Each	56		56
Drainage Scuppers, DS-12M10	Each	2		2
Jack and Remove Existing Bearings	Each	28		28
Silicone Joint Sealer 1"	Foot	130		130
Deck Slab Repair (Partial)	Sq Yd	100		100
Deck Slab Repair (Full Depth, Type I)	Sq Yd	20		20
Deck Slab Repair (Full Depth, Type II)	Sq Yd	20		20
Structural Repair of Concrete (Depth Equal to or Less Than 5")	Sq. Ft.	41	9	50
Structural Repair of Concrete (Depth Greater Than 5")	Sq. Ft.	68		68

LICENSED STRUCTURAL ENGINEER
DAVID CARL PUZEY
081-005470
SPRINGFIELD
ILLINOIS
STATE OF ILLINOIS

D. Carl Puzey 5/13/11
Expires 11/30/2012

GENERAL PLAN AND ELEVATION
IL RTE. 23 OVER OTTER CREEK
FAP 68 (IL 23) SEC. (6B-1)I
LASALLE COUNTY
STA. 142 + 08
S.N. 050–0160

FILE NAME = c:\pw_work\pwidot\woodshankrl\d0257390\D366937-details.dgn	USER NAME = woodshankrl	DESIGNED - RLW	REVISED -
		DRAWN - RLW	REVISED -
	PLOT SCALE = 100.0000 ' / in.	CHECKED -	REVISED -
	PLOT DATE = 5/13/2011	DATE -	REVISED -

STATE OF ILLINOIS
DEPARTMENT OF TRANSPORTATION

GENERAL PLAN AND ELEVATION

SCALE: ____ SHEET NO. 1 OF 12 SHEETS STA. ____ TO STA. ____

F.A.P. RTE.	SECTION	COUNTY	TOTAL SHEETS	SHEET NO.
68	(6B-1)I	LASALLE	20	9
		CONTRACT NO. 66937		
		ILLINOIS FED. AID PROJECT		

D366937-details.dgn 5/13/2011 10:05:04 AM User=woodshankrl

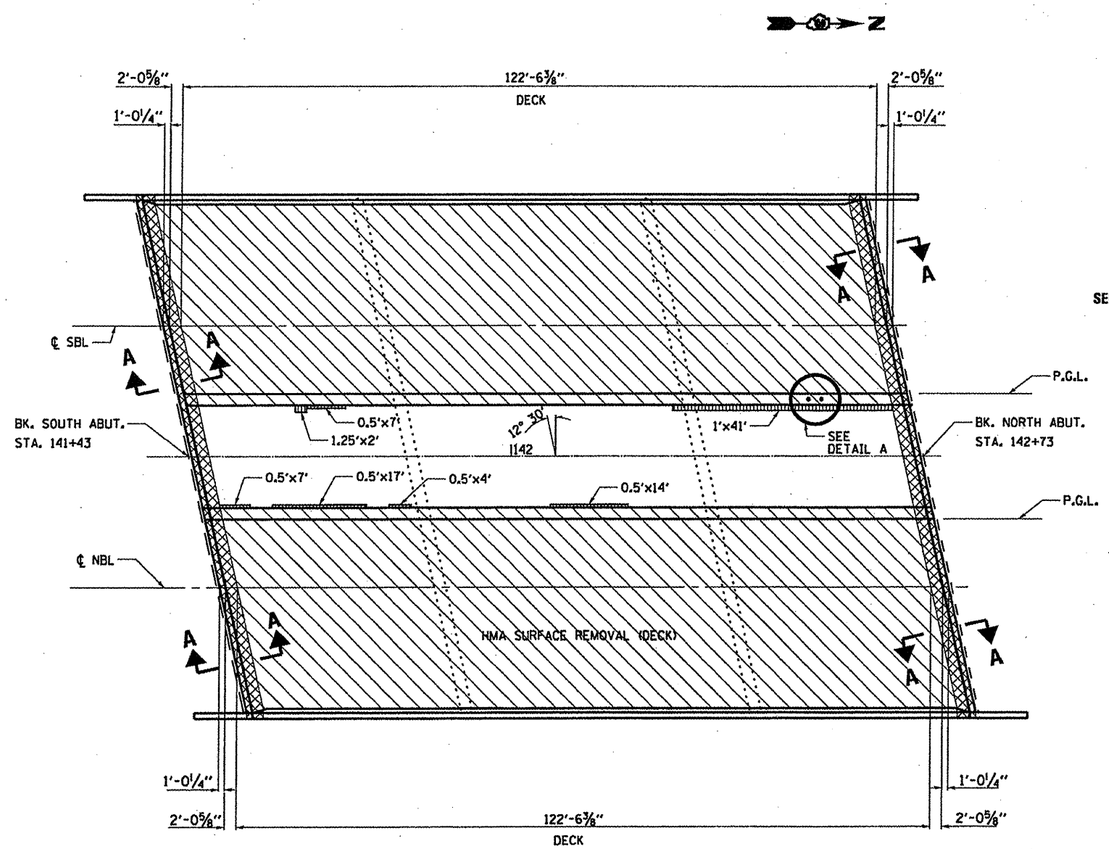

PLAN

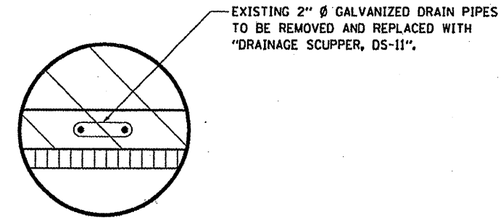

DETAIL A

SEE SHEET NO. 10 OF 12 FOR DETAILS

CONCRETE REMOVAL & REPLACEMENT
EXPANSION JOINT REMOVAL & REPLACEMENT
PROTECTIVE COAT

HMA SURFACE REMOVAL (DECK)
WATERPROOFING MEMBRANE SYSTEM
HMA SURFACE CSE. MIX D, N50

CONCRETE MEDIAN REPAIR
PROTECTIVE COAT

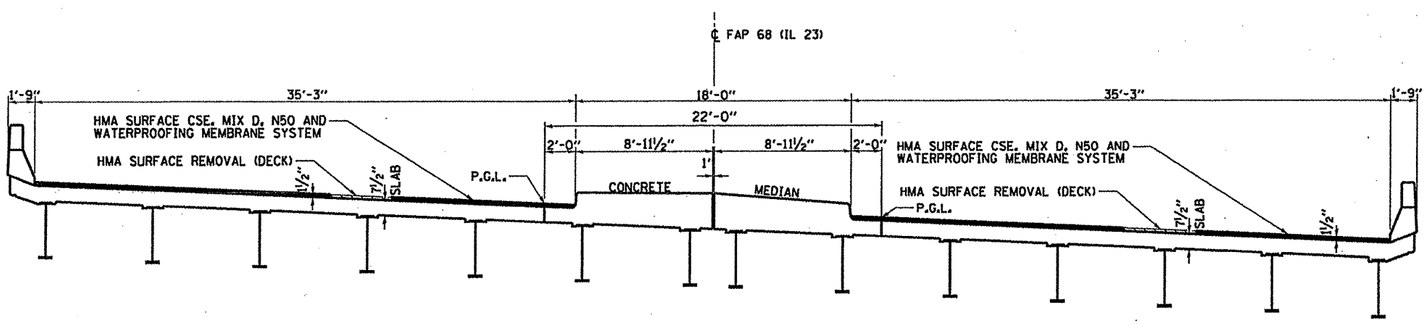

DECK SECTION

SUPERSTRUCTURE
IL RTE. 23 OVER OTTER CREEK
FAP 68 (IL 23) SEC. (6B-1)I
LASALLE COUNTY
STA. 142+08
S.N. 050-0160

FILE NAME = c:\pw_work\pwidot\patelgj\d0257390\D36837-details.dgn	USER NAME = patelgj	DESIGNED - RLW	REVISED -	STATE OF ILLINOIS DEPARTMENT OF TRANSPORTATION	SUPERSTRUCTURE	F.A.P. RTE.	SECTION	COUNTY	TOTAL SHEETS	SHEET NO.
	PLOT SCALE = 100.0000 ' / in.	DRAWN - RLW	REVISED -			68	(6B-1)I	LASALLE	20	10
	PLOT DATE = 5/19/2011	CHECKED -	REVISED -					CONTRACT NO. 66937		
		DATE -	REVISED -		SCALE: SHEET NO. 2 OF 12 SHEETS STA. TO STA.			ILLINOIS FED. AID PROJECT		

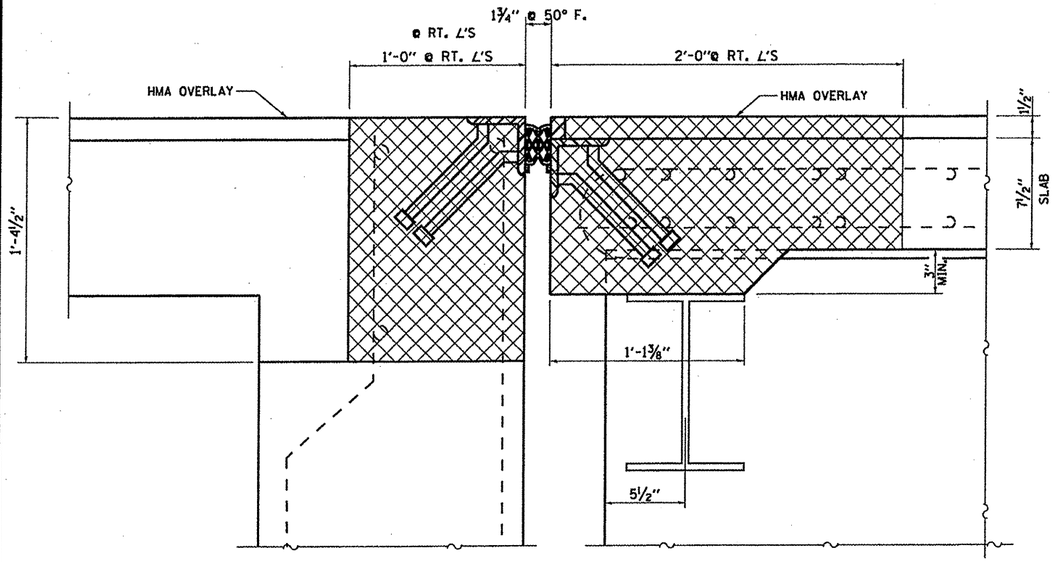

SECTION A-A

AT EXPANSION JOINT

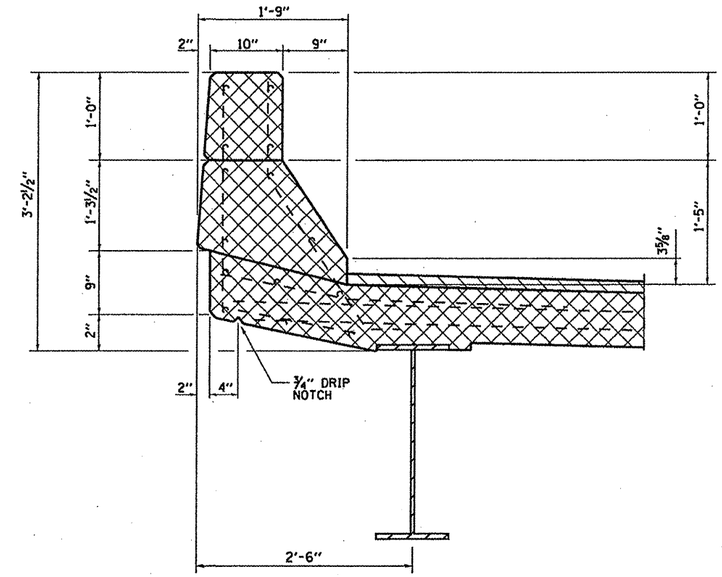

CURB SECTION

AT EXPANSION JOINT

CONCRETE REMOVAL
EXPANSION JOINT REMOVAL

HMA SURFACE REMOVAL (DECK)
WATERPROOFING MEMBRANE SYSTEM

CONCRETE MEDIAN REPAIR

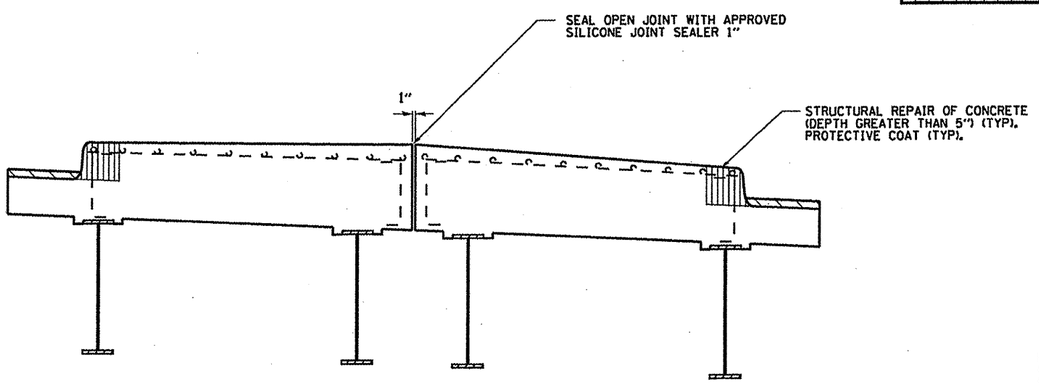

MEDIAN SECTION

AT EXPANSION JOINT

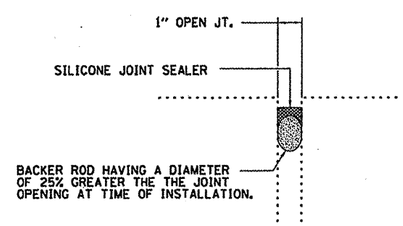

JOINT SEALER DETAIL

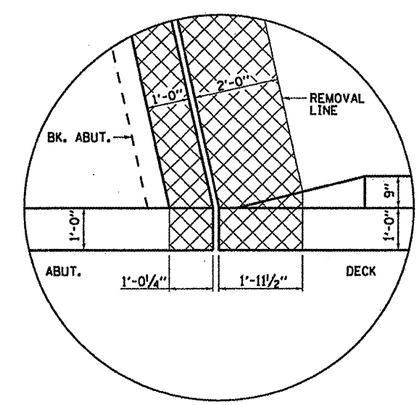

CORNER DETAIL

SUPERSTRUCTURE DETAILS
IL RTE. 23 OVER OTTER CREEK
FAP 68 (IL 23) SEC. (6B-1)I
LASALLE COUNTY
STA. 142+08
S.N. 050-0160

FILE NAME = c:\pw_work\pwidot\patelyj\d0257398\D366937-details.dgn	USER NAME = patelyj	DESIGNED - RLW	REVISED -	STATE OF ILLINOIS DEPARTMENT OF TRANSPORTATION	SUPERSTRUCTURE DETAILS	F.A.P. RTE.	SECTION	COUNTY	TOTAL SHEETS	SHEET NO.
		DRAWN - RLW	REVISED -			68	(6B-1)I	LASALLE	20	11
	PLOT SCALE = 100.0000 ' / in.	CHECKED -	REVISED -					CONTRACT NO. 66937		
	PLOT DATE = 5/19/2011	DATE -	REVISED -		SCALE: SHEET NO. 3 OF 12 SHEETS STA. TO STA.		ILLINOIS	FED. AID PROJECT		

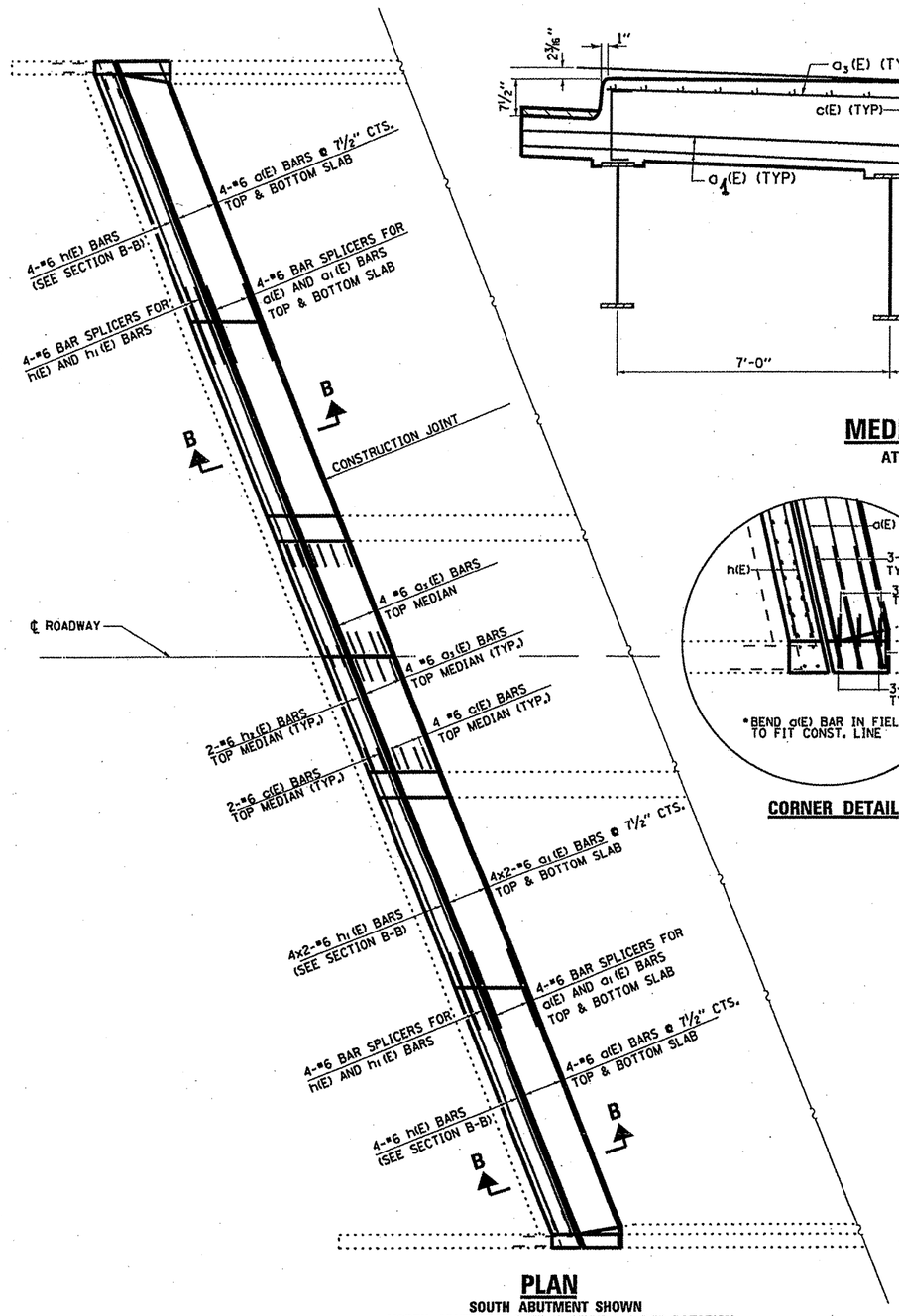

PLAN

SOUTH ABUTMENT SHOWN
NORTH ABUTMENT SIMILAR THRU 180 DEG. ROTATION

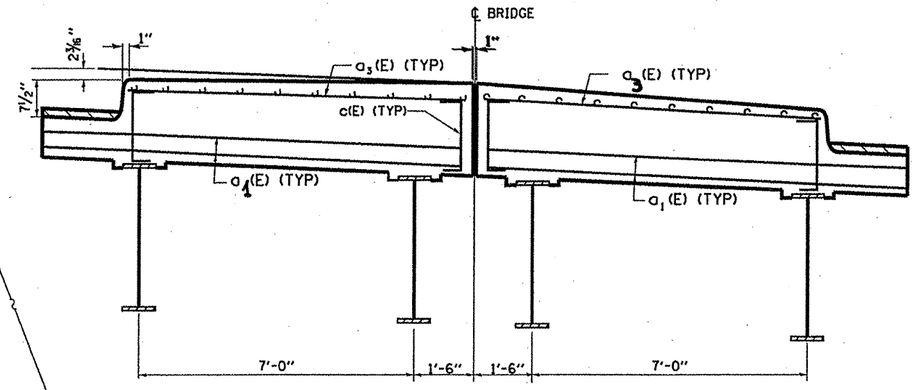

MEDIAN SECTION

AT EXPANSION JOINT

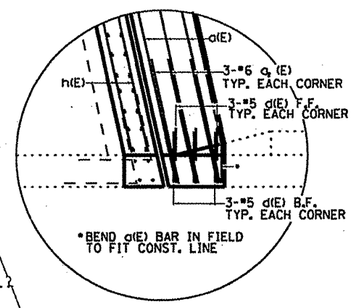

CORNER DETAIL

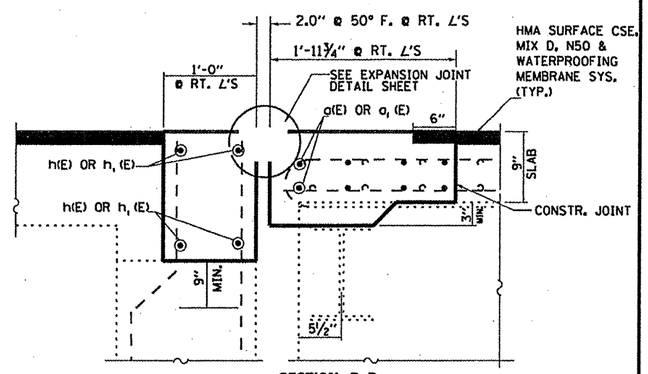

SECTION B-B

AT EXPANSION JOINT

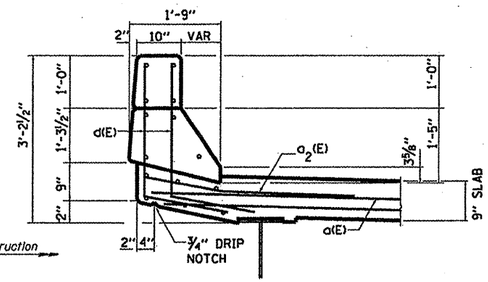

CURB SECTION

AT EXPANSION JOINT

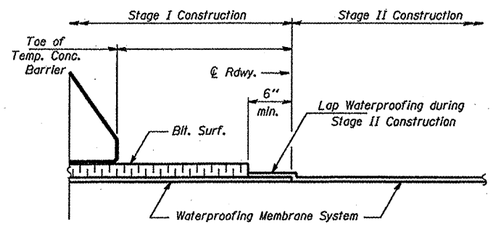

WATERPROOFING TREATMENT AT STAGE CONSTRUCTION

BILL OF MATERIAL

Bar	No.	Size	Length	Shape
a(E)	32	6	19'-4"	
a1(E)	32	6	29'-0"	
a2(E)	12	6	4'-0"	
a3(E)	16	5	9'-0"	
c(E)	48	6	2'-1"	
d(E)	24	4	4'-4"	
h(E)	16	6	18'-4"	
h1(E)	16	6	29'-0"	
h2(E)	8	6	9'-0"	
Concrete Removal			Cu. Yd.	25.4
Concrete Superstructure			Cu. Yd.	25.3
Reinforcement Bars, Epoxy Coated			Lbs.	4010

Bars indicated thus 4 x 2-#6 etc. indicates 4 line of bars with 2 lengths per line.
(E) Denotes Epoxy Coated.

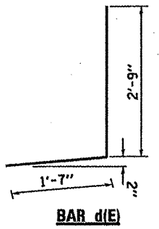

BAR d(E)

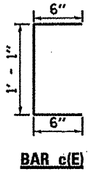

BAR c(E)

BAR a1(E)

BILL OF MATERIAL

ITEM	UNIT	QUANTITY
PROTECTIVE COAT	Sq Yd	73

EXPANSION JOINT DETAILS
IL RTE. 23 OVER OTTER CREEK
FAP 68 (IL 23) SEC. (6B-1)I
LASALLE COUNTY
STA. 142+08
S.N. 050-0160

FILE NAME = c:\pw_work\pwidot\patelyj\d0257398\D366137-details.dgn	USER NAME = patelyj	DESIGNED - RLW	REVISED -	STATE OF ILLINOIS DEPARTMENT OF TRANSPORTATION	EXPANSION JOINT DETAILS	F.A.P. RTE. 68	SECTION (6B-1)I	COUNTY LASALLE	TOTAL SHEETS 20 / SHEET NO. 12
	PLOT SCALE = 100.0000 ' / in.	DRAWN - RLW	REVISED -					CONTRACT NO. 66937	
	PLOT DATE = 5/19/2011	CHECKED -	REVISED -					ILLINOIS FED. AID PROJECT	
		DATE -	REVISED -		SCALE: SHEET NO. 4 OF 12 SHEETS STA. TO STA.				

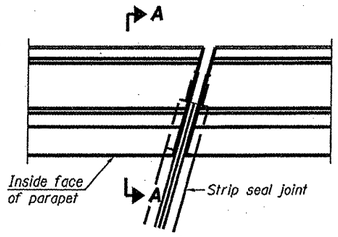

PLAN
(For skews ≤ 30°)

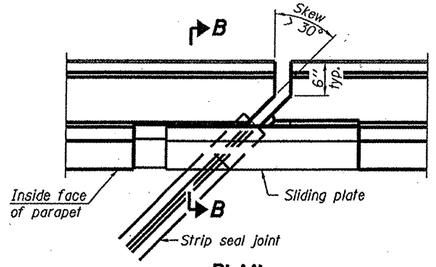

PLAN
(For skews > 30°)
Showing point block

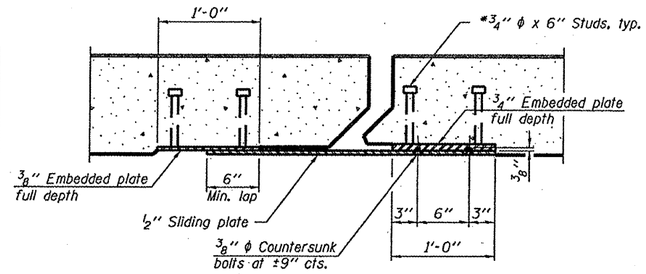

SECTION C-C

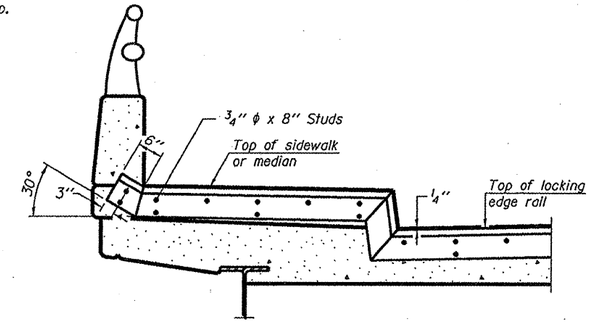

TYPICAL END TREATMENT AT SIDEWALK OR MEDIAN

Shorter plates with a single row of studs at 12" cts. may be necessary on medians which are shallower than 9". See manufacturer's recommendation.

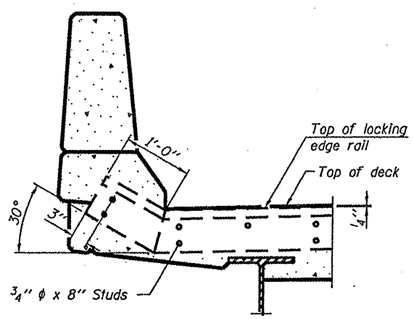

SECTION A-A

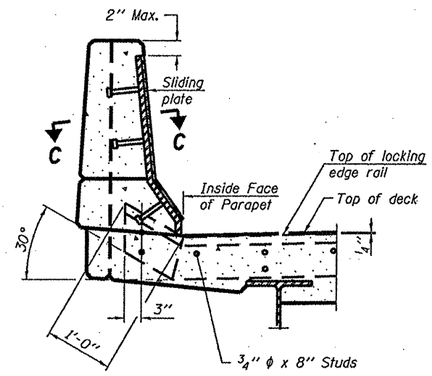

SECTION B-B

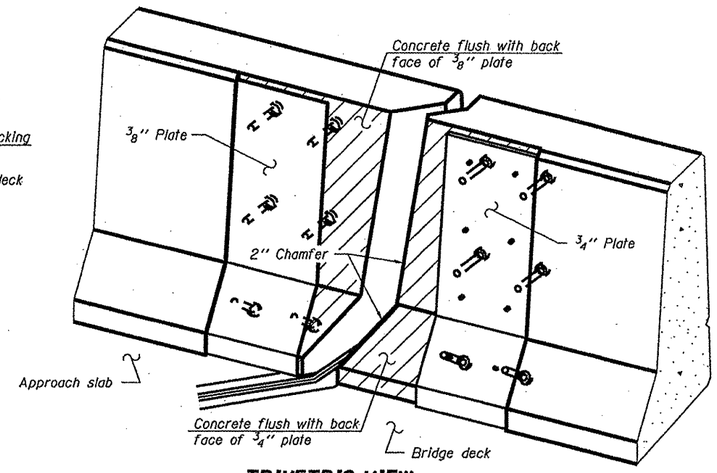

TRIMETRIC VIEW
(Showing back plates only)

Notes:

The strip seal shall be made continuous and shall have a minimum thickness of 1/4". The configuration of the strip seal shall match the configuration of the Locking Edge Rails. Open or "webbed" strip seal gland configurations are not permitted. The gland shall be sized for a maximum rated movement of 4 inches.

The Locking Edge Rails depicted are conceptual only, except for the minimum dimensions shown. The actual configuration of the Locking Edge Rails and matching strip seal may vary from manufacturer to manufacturer. Flanged edge rails will not be allowed. Locking Edge Rails may be spliced at slope discontinuities.

The manufacturer's recommended installation methods shall be followed.

The joint opening and deck dimensions detailed on the superstructure are based on a rolled rail expansion joint. If the Contractor elects to use the welded rail expansion joint, the opening and deck dimensions shall be modified according to the dimensions detailed on this sheet. Required modifications shall be made at no additional cost to the State.

All steel components shall be galvanized after fabrication according to Article 520.03 of the Standard Specifications.

Maximum space between rail segments at stage lines shall be 3/16", sealed with a suitable sealant.

Parapet plates and anchorage studs for skews > 30° included in the cost of Preformed Joint Strip Seal.

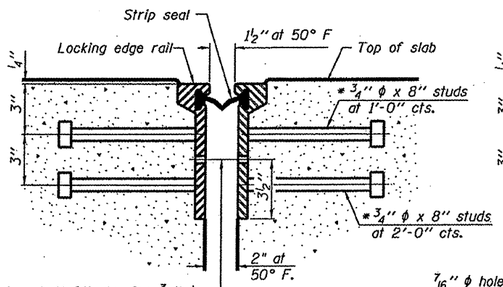

7/16" ϕ holes at 4'-0" cts. for 3/8" ϕ bolts. All bolts shall be burned, sawed, or chipped off flush with the plates after forms are removed, typ.

SECTION THRU ROLLED RAIL JOINT

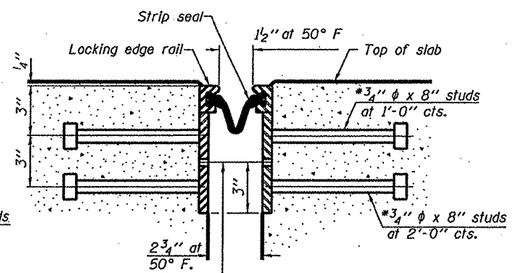

7/16" ϕ holes at 4'-0" cts. for 3/8" ϕ bolts. All bolts shall be burned, sawed, or chipped off flush with the plates after forms are removed, typ.

SECTION THRU WELDED RAIL JOINT

* Granular or solid flux filled headed studs conforming to Article 1006.32 of the Std. Specs., automatically end welded.

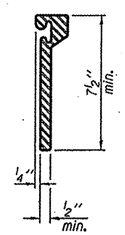

ROLLED EXTRUDED RAIL

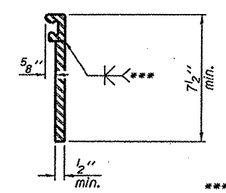

WELDED RAIL

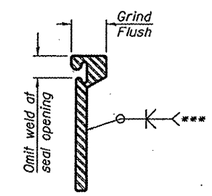

*** Back gauge not required if complete joint penetration is verified by mock-up.

LOCKING EDGE RAIL SPLICE

The inside of the locking edge rail groove shall be free of weld residue.

Rolled rail shown, welded rail similar.

LOCKING EDGE RAILS

BILL OF MATERIAL

Item	Unit	Total
Preformed Joint Strip Seal	Foot	188

PREFORMED JOINT STRIP SEAL DETAILS
IL RTE. 23 OVER OTTER CREEK
FAP 68 (IL 23) SEC. (6B-1)I
LASALLE COUNTY
STA. 142+08
S.N. 050-0160

EJ-SSJ 7-1-10

FILE NAME = c:\pw_work\pwidot\patelyj\d257398\D36937-details.dgn	USER NAME = patelyj	DESIGNED - RLW	REVISED -
	PLOT SCALE = 100.0000 ' / in.	DRAWN - RLW	REVISED -
	PLOT DATE = 5/19/2011	CHECKED -	REVISED -
		DATE -	REVISED -

STATE OF ILLINOIS
DEPARTMENT OF TRANSPORTATION

PREFORMED JOINT STRIP SEAL DETAILS

SCALE: SHEET NO. 5 OF 12 SHEETS STA. TO STA.

F.A.P. RTE.	SECTION	COUNTY	TOTAL SHEETS	SHEET NO.
68	(6B-1)I	LASALLE	20	13
		CONTRACT NO. 66937		
		ILLINOIS FED. AID PROJECT		

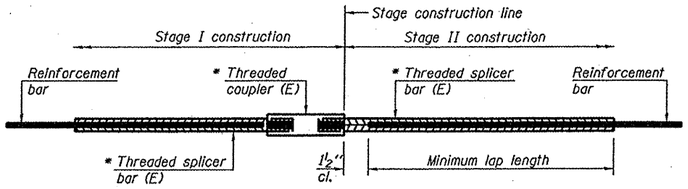

STANDARD BAR SPLICER ASSEMBLY

Minimum Lap Lengths					
Bar size to be spliced	Table 1	Table 2	Table 3	Table 4	Table 5
3, 4	1'-5"	1'-11"	2'-1"	2'-4"	2'-3"
5	1'-9"	2'-5"	2'-7"	2'-11"	2'-10"
6	2'-1"	2'-11"	3'-1"	3'-6"	3'-4"
7	2'-9"	3'-10"	4'-2"	4'-8"	4'-6"
8	3'-8"	5'-1"	5'-5"	6'-2"	5'-10"
9	4'-7"	6'-5"	6'-10"	7'-9"	7'-5"

Table 1: Black bar, 0.8 Class C
Table 2: Black bar, Top bar lap, 0.8 Class C
Table 3: Epoxy bar, 0.8 Class C
Table 4: Epoxy bar, Top bar lap, 0.8 Class C
Table 5: Epoxy bar, Top bar lap, Class B

Threaded splicer bar length = min. lap length + 1½" + thread length

* Epoxy not required on Bar Splicer Assembly components used in conjunction with black bars.

Location	Bar size	No. assemblies required	Table for minimum lap length
DECK @ N. ABUT.	#6	16	3
END DAM @ N. ABUT.	#6	8	3
DECK @ S. ABUT.	#6	16	3
END DAM @ N. ABUT.	#6	8	3

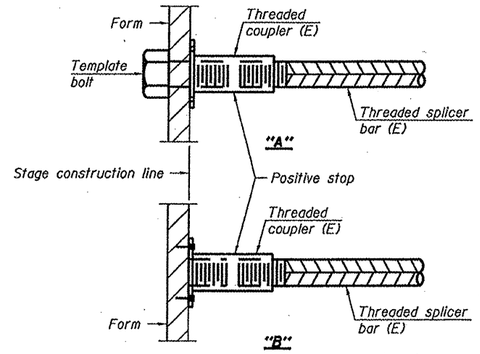

INSTALLATION AND SETTING METHODS

"A" : Set bar splicer assembly by means of a template bolt.
"B" : Set bar splicer assembly by nailing to wood forms or cementing to steel forms.
(E) : Indicates epoxy coating.

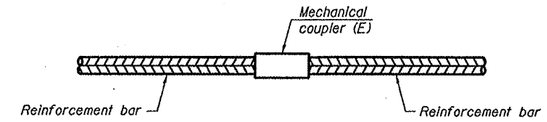

STANDARD MECHANICAL SPLICER

Location	Bar size	No. assemblies required

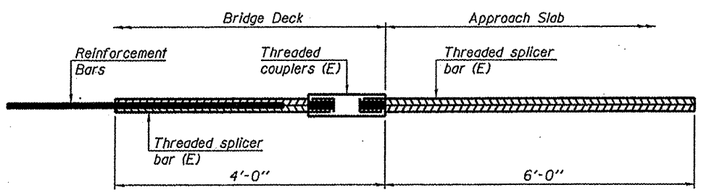

BAR SPLICER ASSEMBLY FOR #5 BAR ON INTEGRAL OR SEMI-INTEGRAL ABUTMENTS

No. required =

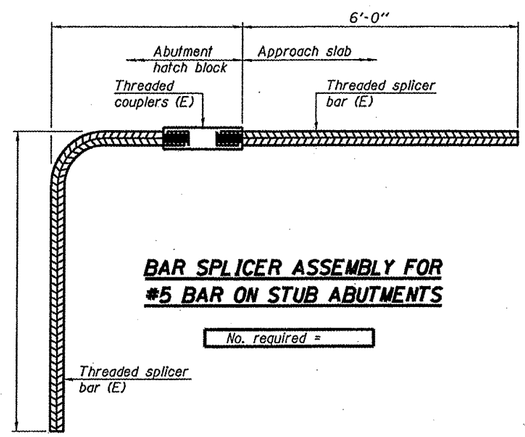

BAR SPLICER ASSEMBLY FOR #5 BAR ON STUB ABUTMENTS

No. required =

NOTES

Splicer bars shall be deformed with threaded ends and have a minimum 60 ksi yield strength.
All reinforcement shall be lapped and tied to the splicer bars.
Bar splicer assemblies shall be epoxy coated according to the requirements for reinforcement bars. See Section 508 of the Standard Specifications.
See special provision for Mechanical Splicers.
See approved list of bar splicer assemblies and mechanical splicers for alternatives.

BSD-1 7-1-10

BAR SPLICER AND MECHANICAL SPLICER DETAILS
IL RTE. 23 OVER OTTER CREEK
FAP 68 (IL 23) SEC. (6B-1)I
LASALLE COUNTY
STA. 142+08
S.N. 050-0160

FILE NAME = c:\pw_work\pwidot\patelyj\d0257398\D36637-details.dgn	USER NAME = patelyj	DESIGNED - RLW	REVISED -	STATE OF ILLINOIS DEPARTMENT OF TRANSPORTATION	BAR SPLICER AND MECHANICAL SPLICER DETAILS	F.A.P. RTE.	SECTION	COUNTY	TOTAL SHEETS	SHEET NO.
	PLOT SCALE = 100.0000 '/ in.	DRAWN - RLW	REVISED -			68	(6B-1)I	LASALLE	20	14
	PLOT DATE = 5/19/2011	CHECKED -	REVISED -					CONTRACT NO. 66937		
		DATE -	REVISED -		SCALE: SHEET NO. 6 OF 12 SHEETS STA. TO STA.			ILLINOIS FED. AID PROJECT		

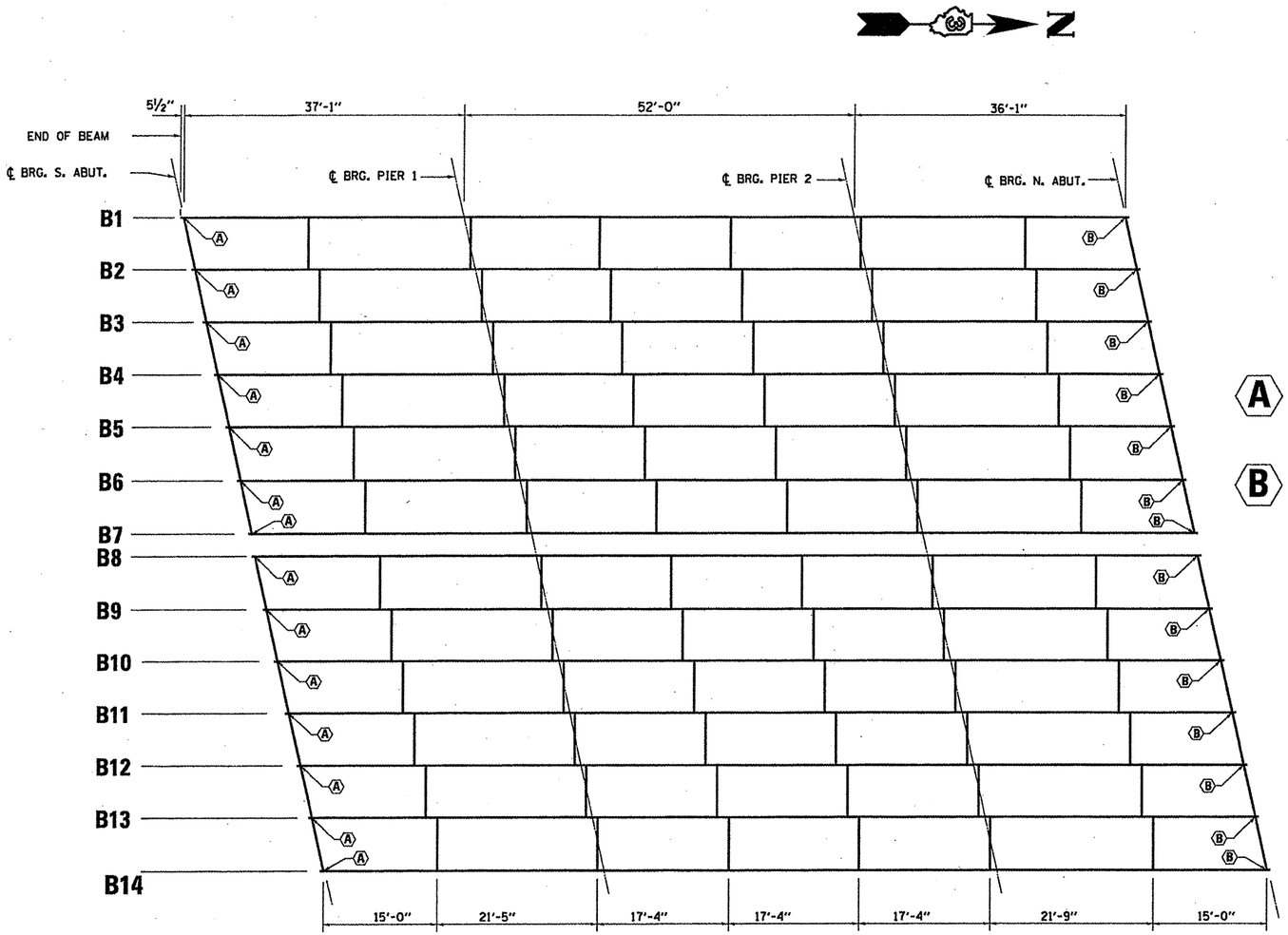

FRAMING PLAN

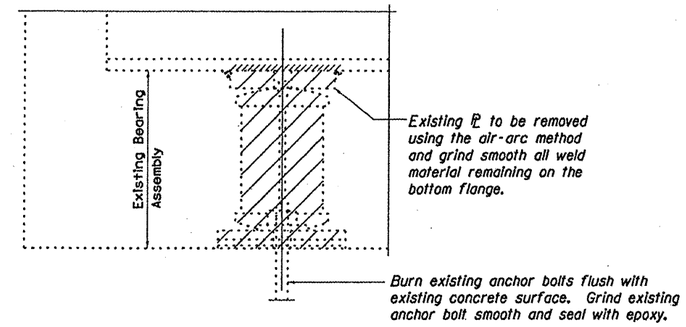

EXISTING BEARING REMOVAL DETAIL

Cost included with Jack and Remove Existing Bearings.

(A) REMOVE EXISTING ROCKER BEARING INSTALL "ELASTOMERICE BEARING ASSEMBLY, TYPE I"

(B) REMOVE EXISTING ROCKER BEARING INSTALL "ELASTOMERICE BEARING ASSEMBLY, TYPE II"

ELASTOMERIC BEARING ASSEMBLY
IL RTE. 23 OVER OTTER CREEK
FAP 68 (IL 23) SEC. (6B-1)I
LASALLE COUNTY
STA. 142+08
S.N. 050-0160

FILE NAME = o:\pw_work\pwidot\patelyj\d0257398\D366927-details.dgn	USER NAME = patelyj	DESIGNED - RLW	REVISED -	STATE OF ILLINOIS DEPARTMENT OF TRANSPORTATION	FRAMING PLAN	F.A.P. RTE.	SECTION	COUNTY	TOTAL SHEETS	SHEET NO.
	PLOT SCALE = 100.0000 ' / in.	DRAWN - RLW	REVISED -			68	(6B-1)I	LASALLE	20	15
	PLOT DATE = 5/19/2011	CHECKED -	REVISED -		SCALE: SHEET NO. 7 OF 12 SHEETS STA. TO STA.			CONTRACT NO. 66937		
		DATE -	REVISED -					ILLINOIS FED. AID PROJECT		

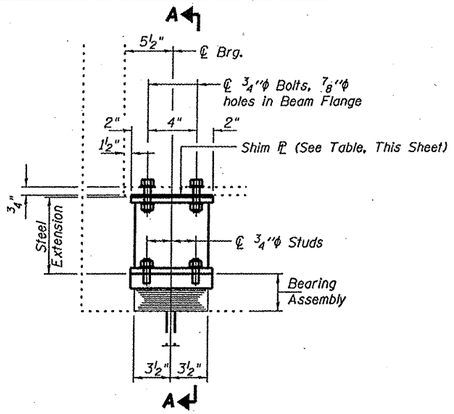

ELEVATION AT ABUTMENT

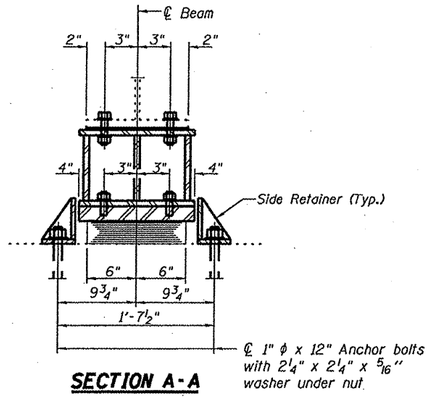

SECTION A-A

TYPE I ELASTOMERIC EXP. BRG.

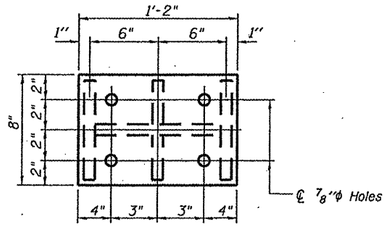

PLAN TOP AND BOTTOM PLATE

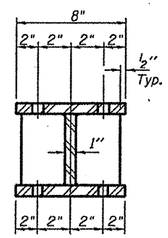

SECTION B-B

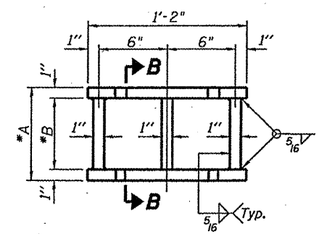

STEEL EXTENSION DETAIL

BEAM REACTIONS

RP	(K)	15.1
Rt	(K)	32.4
Imp.	(K)	9.7
R (Total)	(K)	57.2

Notes:

Diaphragm removal and reinstallation may be required to facilitate drilling holes. Cost included with Furnishing and Erecting Structural Steel.

New steel extensions, shim plates and connection bolts are included with Furnishing and Erecting Structural Steel.

Prior to ordering any material, the Contractor shall verify in the field all bearing height and shim thickness dimensions.

Min. jack capacity = 30 Tons.

Anchor bolts shall be ASTM F1554 all-thread (or an Engineer-approved alternate material) of the grade(s) and diameter(s) specified. ASTM A307 Grade C anchor bolts may be used in lieu of ASTM F1554 Grade 36 (Fy=36ksi). The corresponding specified grade of AASHTO M314 anchor bolts may be used in lieu of ASTM F1554.

Anchor bolts at fixed bearings may be either cast in place or installed in holes drilled after the supported member is in place.

Drilled and set anchor bolts shall be installed according to Article 521.06 of the Standard Specifications.

Side retainers shall be included in the cost of Elastomeric Bearing Assembly, Type I.

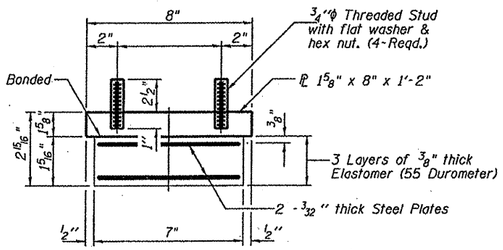

BEARING ASSEMBLY

Note:
Shim plates shall not be placed under Bearing Assembly.

SOUTH ABUTMENT			
BEAM NO.	"A" INCHES	"B" INCHES	SHIM PLATE THICKNESS-INCHES
1	10 3/4	8 3/4	1/4
2	10 3/4	8 3/4	0
3	10 3/4	8 3/4	1/4
4	10 3/4	8 3/4	1/8
5	10 3/4	8 3/4	1/4
6	11 1/8	9 1/8	1/8
7	11 1/8	9 1/8	1/8
8	11 1/8	9 1/8	1/8
9	11 1/8	9 1/8	1/2
10	11 1/8	9 1/8	1/8
11	11 1/8	9 1/8	1/2
12	11 1/8	9 1/8	0
13	11 1/8	9 1/8	1/8
14	11 1/8	9 1/8	1/8

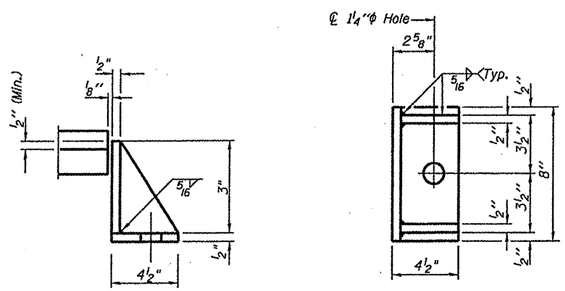

SIDE RETAINER

Equivalent rolled angle with stiffeners will be allowed in lieu of welded plates.

BILL OF MATERIAL

Item	Unit	Total
Elastomeric Bearing Assembly, Type I	Each	14
Jack and Remove Existing Bearings	Each	14
Furnishing and Erecting Structural Steel	Pound	2110
Anchor Bolts 1"φ	Each	28

ELASTOMERIC BEARING ASSEMBLY, TYPE I
IL RTE. 23 OVER OTTER CREEK
FAP 68 (IL 23) SEC. (6B-1)I
LASALLE COUNTY
STA. 142+08
S.N. 050-0160

TYI/REPS 12-03-2008

FILE NAME = c:\pw_work\pwidot\patelyj\d0257398\D366937-details.dgn	USER NAME = patelyj	DESIGNED - RLW	REVISED -
		DRAWN - RLW	REVISED -
	PLOT SCALE = 100.0000 ' / in.	CHECKED -	REVISED -
	PLOT DATE = 5/19/2011	DATE -	REVISED -

STATE OF ILLINOIS
DEPARTMENT OF TRANSPORTATION

ELASTOMERIC BEARING ASSEMBLY, TYPE I AT SOUTH ABUTMENT

SCALE: SHEET NO. 8 OF 12 SHEETS STA. TO STA.

F.A.P. RTE.	SECTION	COUNTY	TOTAL SHEETS	SHEET NO.
68	(6B-1)I	LASALLE	20	16

CONTRACT NO. 66937
ILLINOIS FED. AID PROJECT

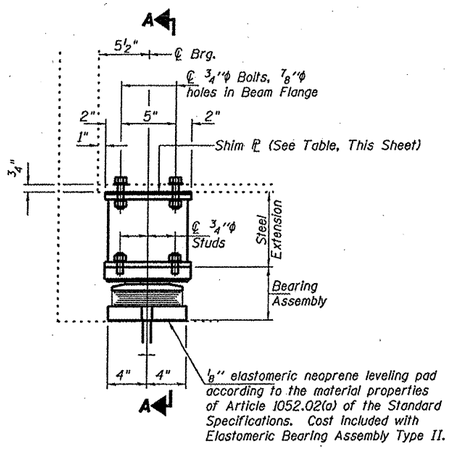

ELEVATION AT ABUTMENT

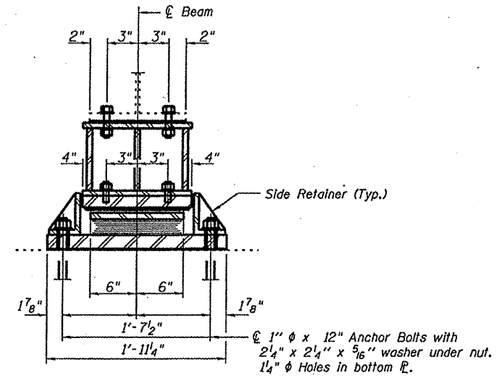

SECTION A-A

TYPE II TFE ELASTOMERIC EXP. BRG.

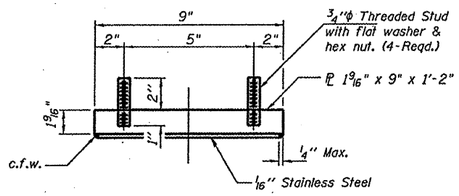

TOP BEARING ASSEMBLY

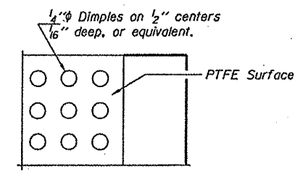

PLAN-PTFE SURFACE

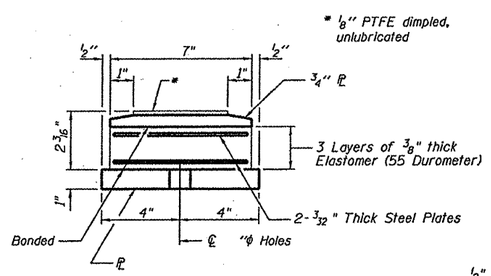

BOTTOM BEARING ASSEMBLY

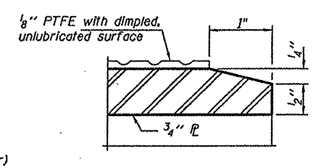

SECTION THRU PTFE

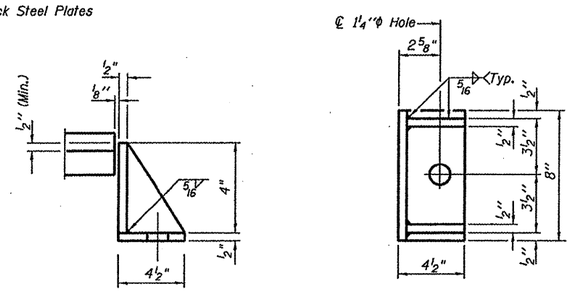

SIDE RETAINER

Equivalent rolled angle with stiffeners will be allowed in lieu of welded plates.

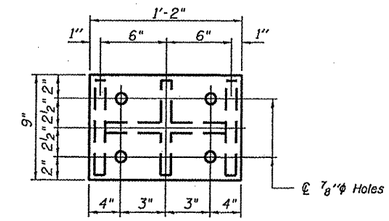

PLAN TOP AND BOTTOM PLATE

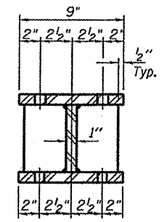

SECTION B-B

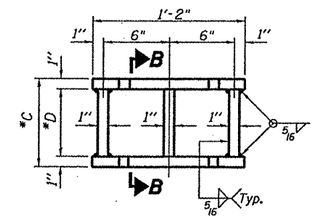

STEEL EXTENSION DETAIL

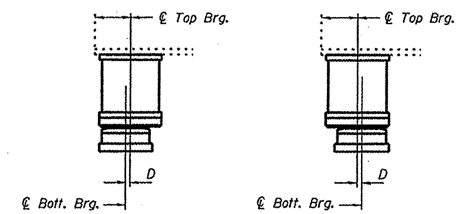

BELOW 50° F. (Move bott. brg. away from fixed brg.)

ABOVE 50° F. (Move bott. brg. toward fixed brg.)

SETTING ANCHOR BOLTS AT EXP. BRG.

D = ⅛" per each 100' of expansion for every 15° temp. change from the normal temp. of 50°F.

NORTH ABUTMENT			
BEAM NO.	"C" INCHES	"D" INCHES	SHIM PLATE THICKNESS-INCHES
1	10 3/4	8 3/4	5/8
2	10 3/4	8 3/4	1
3	10 3/4	8 3/4	1/8
4	10 3/4	8 3/4	0
5	10 3/4	8 3/4	1/4
6	11 1/8	9 1/8	1/4
7	11 1/8	9 1/8	1/4
8	11 1/8	9 1/8	1/8
9	11 1/8	9 1/8	0
10	11 1/8	9 1/8	5/8
11	11 1/8	9 1/8	1/4
12	11 1/8	9 1/8	1/2
13	11 1/8	9 1/8	1/2
14	11 1/8	9 1/8	1/4

BEAM REACTIONS

RP	(K)	15.1
RL	(K)	32.4
Imp.	(K)	9.7
R (Total)	(K)	57.2

Notes:

Diaphragm removal and reinstallation may be required to facilitate drilling holes. Cost Included with Furnishing and Erecting Structural Steel.

New steel extensions, shim plates and connection bolts are Included with Furnishing and Erecting Structural Steel.

Prior to ordering any material, the Contractor shall verify in the field all bearing height and shim thickness dimensions. Min. jack capacity = 30 Tons.

Anchor bolts shall be ASTM F1554 all-thread (or an Engineer-approved alternate material) of the grade(s) and diameter(s) specified. ASTM A307 Grade C anchor bolts may be used in lieu of ASTM F1554 Grade 36 (Fy=36ksi). The corresponding specified grade of AASHTO M314 anchor bolts may be used in lieu of ASTM F1554.

Anchor bolts at fixed bearings may be either cast in place or installed in holes drilled after the supported member is in place.

Anchor bolts for Type II bearings shall be placed in holes drilled through the bottom bearing plate after members are in place. Side retainers shall be placed after bolts are installed.

Drilled and set anchor bolts shall be installed according to Article 521.06 of the Standard Specifications.

Side retainers shall be included in the cost of Elastomeric Bearing Assembly, Type II.

The ⅛" PTFE sheet shall be bonded directly to the top steel plate with a two-component, medium viscosity epoxy resin, conforming to the requirements of the Federal Specification MMM-A-134, Type I. The bond agent shall be applied on the full area of the contact surfaces.

Bonding of ⅛" PTFE sheet during vulcanizing process will be permitted provided the process and method of adjusting assembly height is approved by the Engineer.

BILL OF MATERIAL

Item	Unit	Total
Elastomeric Bearing Assembly, Type II	Each	14
Jack and Remove Existing Bearings	Each	14
Furnishing and Erecting Structural Steel	Pound	2380
Anchor Bolts 1"φ	Each	28

ELASTOMERIC BEARING ASSEMBLY, TYPE II
IL RTE. 23 OVER OTTER CREEK
FAP 68 (IL 23) SEC. (6B-1)I
LASALLE COUNTY
STA. 142+08
S.N. 050-0160

TYII/REPS 12-03-2008

FILE NAME = c:\pw_work\pwidot\patelyj\d0257390\D366937-details.dgn	USER NAME = patelyj	DESIGNED - RLW	REVISED -
		DRAWN - RLW	REVISED -
	PLOT SCALE = 100.0000 ' / in.	CHECKED -	REVISED -
	PLOT DATE = 5/19/2011	DATE -	REVISED -

STATE OF ILLINOIS
DEPARTMENT OF TRANSPORTATION

ELASTOMERIC BEARING ASSEMBLY, TYPE II AT NORTH ABUTMENT

SCALE: SHEET NO. 9 OF 12 SHEETS STA. TO STA.

F.A.P. RTE.	SECTION	COUNTY	TOTAL SHEETS	SHEET NO.
68	(6B-1)I	LASALLE	20	17
		CONTRACT NO. 66937		
		ILLINOIS FED. AID PROJECT		

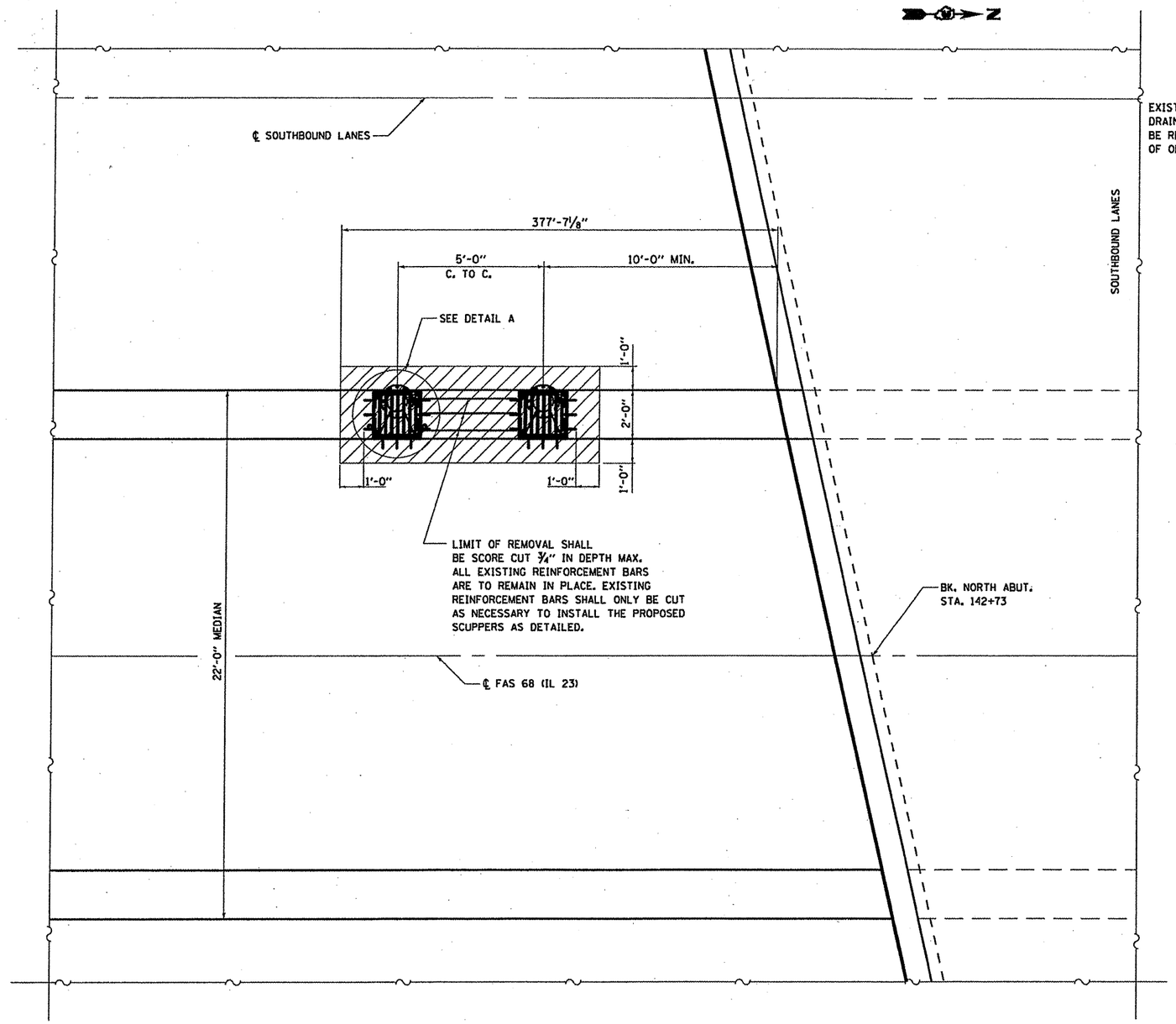

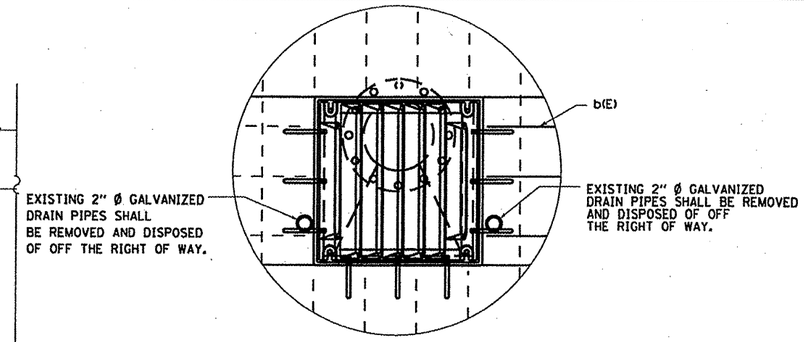

DETAIL A

EXISTING REINFORCEMENT SHALL BE CUT TO CLEAR DRAINAGE SCUPPER

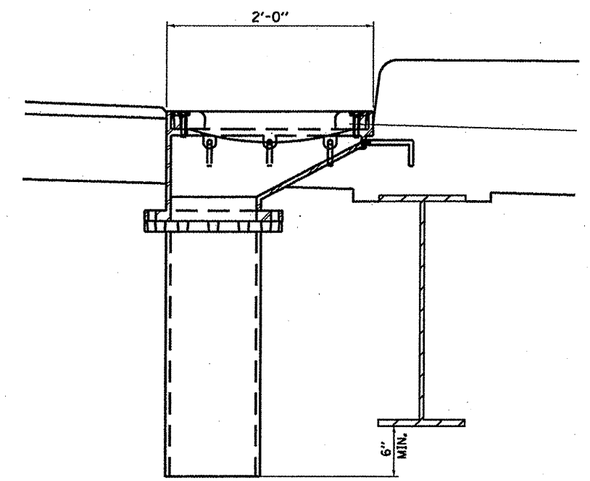

SECTION AT DRAIN

CONCRETE REMOVAL & REPLACEMENT
PROTECTIVE COAT

BILL OF MATERIAL

ITEM	UNIT	QUANTITY
CONCRETE REMOVAL	Cu Yd	1.7
CONCRETE SUPERSTRUCTURE	Cu Yd	1.7
PROTECTIVE COAT	Sq Yd	4

DRAINAGE SCUPPER, DS-12M10
IL RTE. 23 OVER OTTER CREEK
FAP 68 (IL 23) SEC. (6B-1)I
LASALLE COUNTY
STA. 142+08
S.N. 050-0160

FILE NAME = c:\pw_work\pwidot\patelyj\d0257398\D36693 7-details.dgn	USER NAME = patelyj	DESIGNED - RLW	REVISED -
		DRAWN - RLW	REVISED -
	PLOT SCALE = 100.0000 ' / in.	CHECKED -	REVISED -
	PLOT DATE = 5/19/2011	DATE -	REVISED -

STATE OF ILLINOIS
DEPARTMENT OF TRANSPORTATION

DRAINAGE SCUPPER, DS-12M10

SCALE: ____ SHEET NO. 10 OF 12 SHEETS STA. ____ TO STA. ____

F.A.P. RTE.	SECTION	COUNTY	TOTAL SHEETS	SHEET NO.
68	(6B-1)I	LASALLE	20	18
		CONTRACT NO. 66937		
		ILLINOIS FED. AID PROJECT		

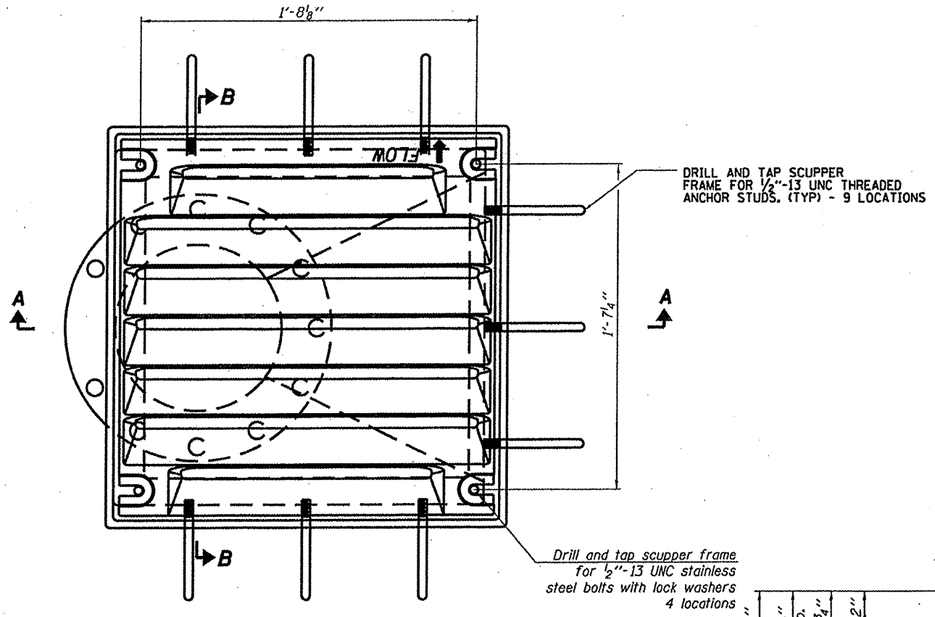

PLAN

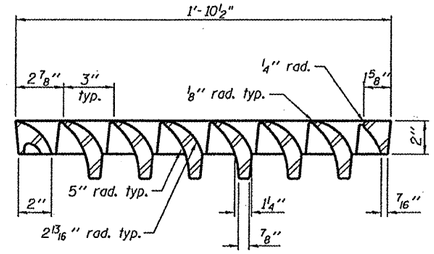

VANE GRATE DETAIL

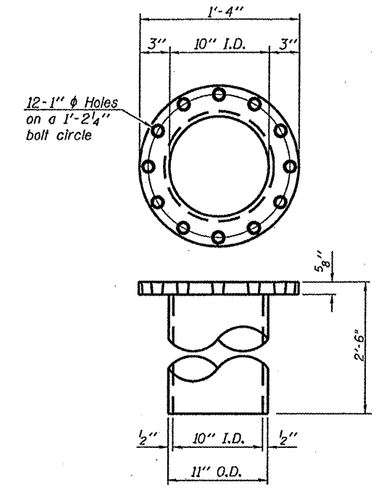

DOWNSPOUT

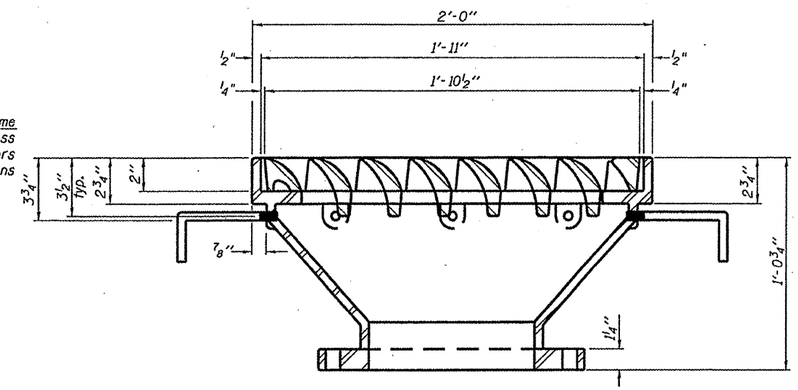

SECTION B-B

SECTION A-A

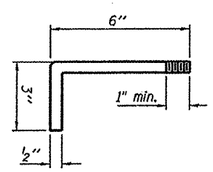

ANCHOR STUD DETAIL

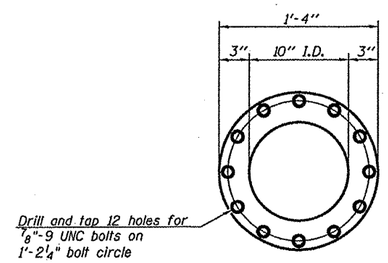

VIEW C-C

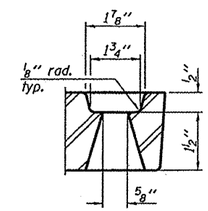

GRATE BOLT HOLE DETAIL

Notes:

All cast iron parts shall be gray iron conforming to the requirements of AASHTO M 105, Class 35B.

Bolts, anchor studs, washers and nuts shall conform to the requirements of ASTM A 307 and shall be galvanized according to AASHTO M 232.

All castings shall conform to the requirements of AASHTO M 306.

Downspouts located on the exterior side of a painted steel fascia beam shall be painted with the finish coat specified for the exterior side of the fascia beam.

As an alternate, bolts, anchor studs, washers and nuts may be stainless steel according to Article 1006.29(d) of the Standard Specifications.

Structural steel weldments of equal sections and of the same configuration may be substituted for the cast iron scupper frame. Fillet or full penetration welds shall be used for the weldments. Details shall be submitted to the Engineer for approval. Structural steel weldments shall not be substituted for the cast iron scupper grate. Structural steel frames and downspouts shall be galvanized according to AASHTO M111.

The Contractor shall take appropriate measures to assure that Protective Coat is not applied to the scupper.

Cost of the Grate, Frame, Downspout, Anchor Studs, Bolts, Washers and Nuts including complete installation of the scupper shall be paid for at the contract unit price each for Drainage Scupper, DS-12M10.

Alternate fiberglass downspout conforming to ASTM D 2996 with a short-time rupture strength hoop tensile stress of 30,000 psi min. may be used in lieu of the cast iron or steel equivalent.

BILL OF MATERIAL

ITEM	UNIT	QUANTITY
Drainage Scupper, DS-12M10	Each	2

DRAINAGE SCUPPER, DS-12M10
IL RTE. 23 OVER OTTER CREEK
FAP 68 (IL 23) SEC. (6B-1)I
LASALLE COUNTY
STA. 142+08
S.N. 050-0160

FILE NAME = c:\pw_work\pwidot\pataly j\d0257398\D366137-details.dgn	USER NAME = pataly j	DESIGNED - RLW	REVISED -
		DRAWN - RLW	REVISED -
	PLOT SCALE = 100.0000 ' / in.	CHECKED -	REVISED -
	PLOT DATE = 5/19/2011	DATE -	REVISED -

STATE OF ILLINOIS
DEPARTMENT OF TRANSPORTATION

DRAINAGE SCUPPER, DS-12M10

SCALE: SHEET NO. 11 OF 12 SHEETS STA. TO STA.

F.A.P. RTE.	SECTION	COUNTY	TOTAL SHEETS	SHEET NO.
68	(6B-1)I	LASALLE	20	19
		CONTRACT NO. 66937		
		ILLINOIS FED. AID PROJECT		

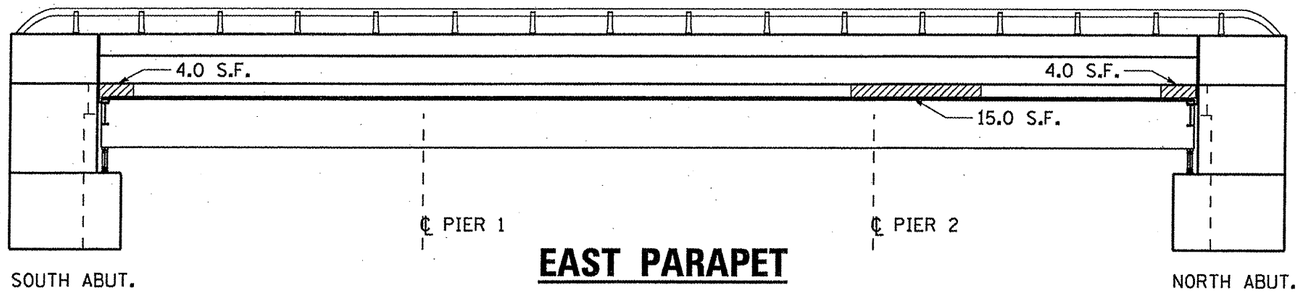

EAST PARAPET
OUTSIDE FACE

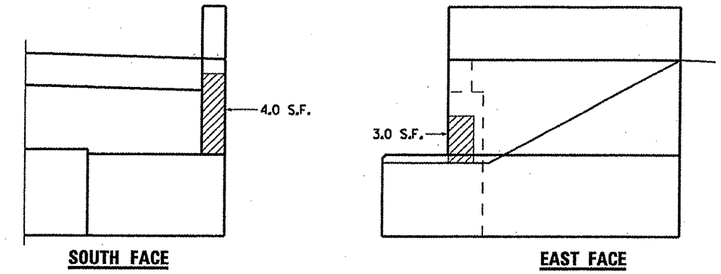

NORTH ABUTMENT
NORTHEAST CORNER

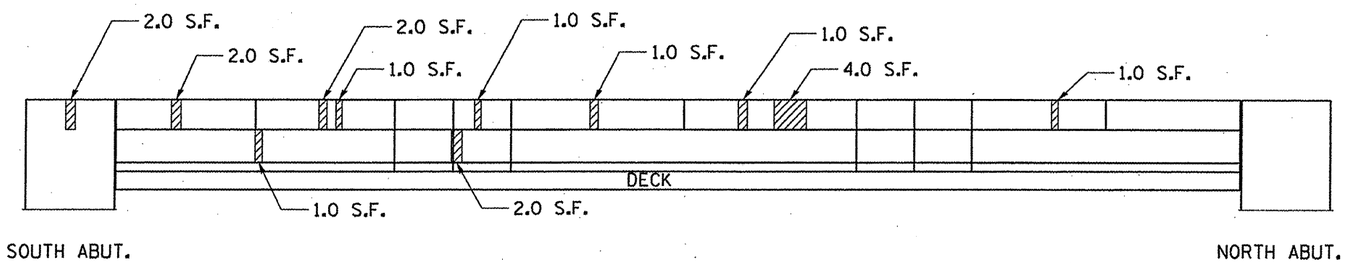

WEST PARAPET
INSIDE FACE

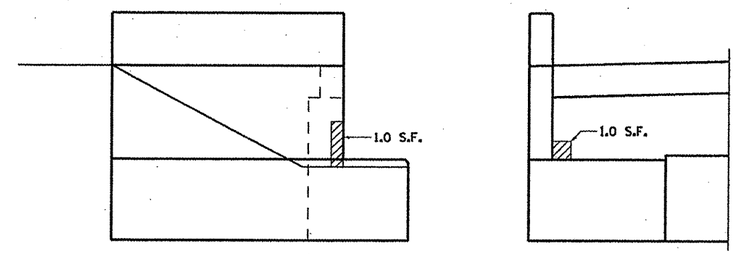

SOUTH ABUTMENT
SOUTHEAST CORNER

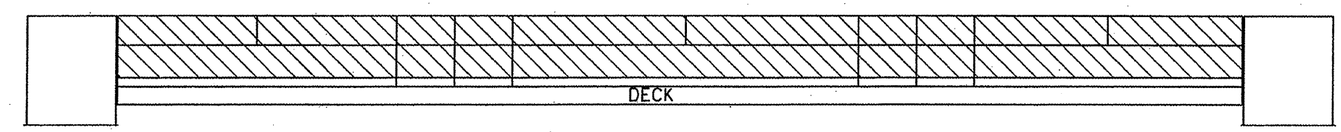

WEST PARAPET SHOWN.
EAST PARAPET SIMILAR.

PROTECTIVE COAT
TOP AND INSIDE FACES OF EAST AND WEST PARAPET

BILL OF MATERIAL

ITEM	UNIT	QUANTITY
STRUCTURAL REPAIR OF CONCRETE (DEPTH EQUAL TO OR LESS THAN 5")	Sq Ft	50
PROTECTIVE COAT	Sq Yd	104

STRUCTURAL REPAIR OF CONCRETE (DEPTH EQUAL TO OR LESS THAN 5")
PROTECTIVE COAT

PROTECTIVE COAT

STRUCTURAL REPAIR OF CONCRETE
IL RTE. 23 OVER OTTER CREEK
FAP 68 (IL 23) SEC. (6B-1)I
LASALLE COUNTY
STA. 142+08
S.N. 050-0160

FILE NAME = c:\pw_work\pwidot\patelyj\d0257398\D366937-details.dgn	USER NAME = patelyj	DESIGNED - RLW	REVISED -	STATE OF ILLINOIS DEPARTMENT OF TRANSPORTATION	STRUCTURAL REPAIR OF CONCRETE	F.A.P. RTE. 68	SECTION (6B-1)I	COUNTY LASALLE	TOTAL SHEETS 20 / SHEET NO. 20
	PLOT SCALE = 100.0000 ' / in.	DRAWN - RLW	REVISED -					CONTRACT NO. 66937	
	PLOT DATE = 5/19/2011	CHECKED -	REVISED -		SCALE:	SHEET NO. 12 OF 12 SHEETS	STA. TO STA.	ILLINOIS FED. AID PROJECT	
		DATE -	REVISED -						