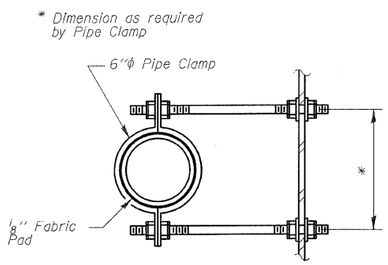

SECTION A-A

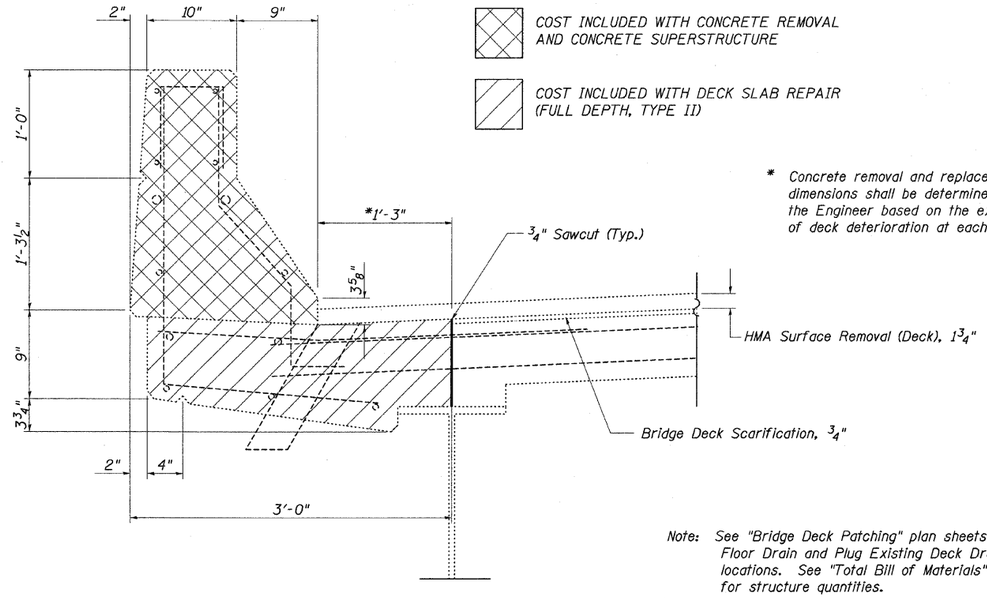

COST INCLUDED WITH CONCRETE REMOVAL AND CONCRETE SUPERSTRUCTURE

COST INCLUDED WITH DECK SLAB REPAIR (FULL DEPTH, TYPE II)

* Concrete removal and replacement dimensions shall be determined by the Engineer based on the extent of deck deterioration at each drain.

SECTION THRU EXISTING FLOOR DRAINS

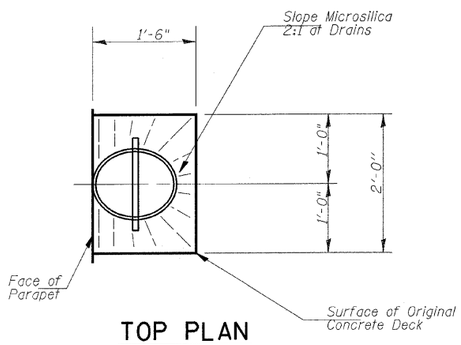

TOP PLAN

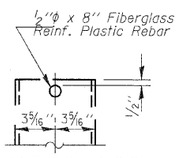

FIBERGLASS PIPE

TOP PLAN

(Showing Aluminum Tube)

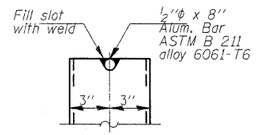

ALUMINUM TUBE

Note: See "Bridge Deck Patching" plan sheets for Floor Drain and Plug Existing Deck Drain locations. See "Total Bill of Materials" for structure quantities.

The exterior surfaces of the floor drains shall be painted with the finish coat as specified in the special provisions for Cleaning and Painting New Metal Structures. The exterior surfaces of the drains shall be cleaned according to Society of Protective Coating's Spec. SSPC-SPI prior to painting.

Fiberglass pipe shall conform to ASTM D 2996, with short-time rupture strength hoop tensile stress of 30,000 p.s.i. minimum. Galvanize clamping device according to AASHTO M 232. Cost of clamping device and galvanizing included with Floor Drains.

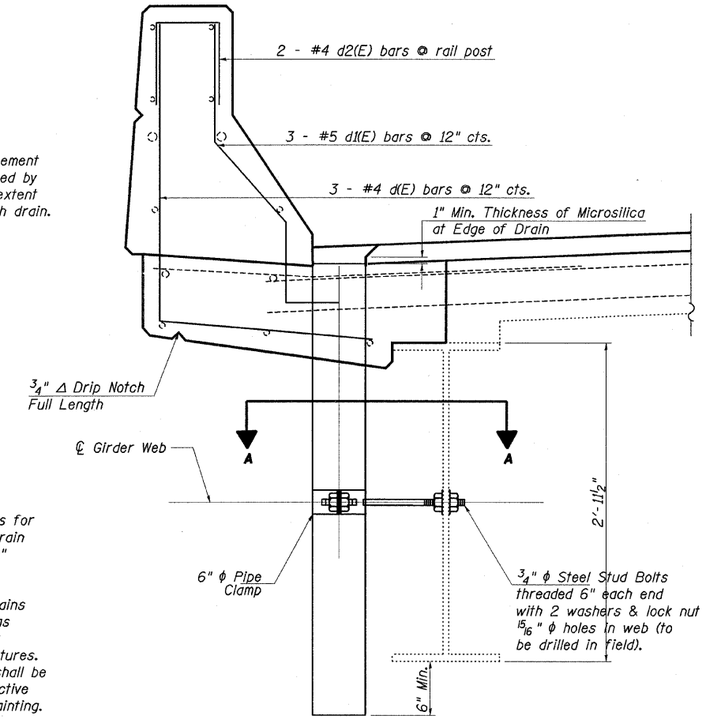

SECTION THRU PROPOSED FLOOR DRAINS

(28 REQUIRED)

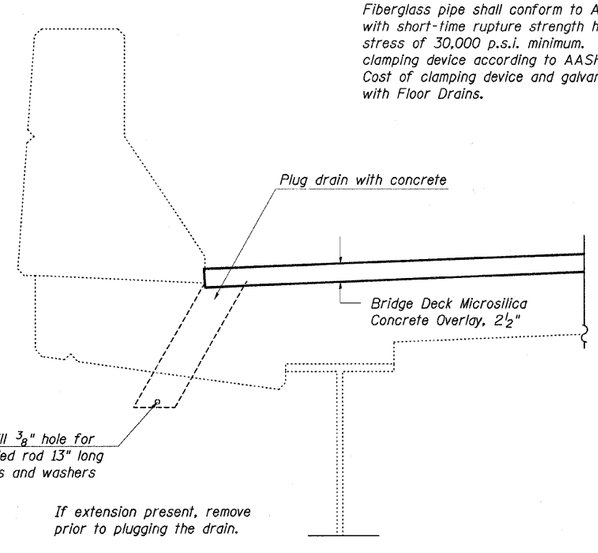

DRAINS TO BE PLUGGED DETAIL

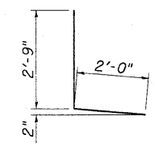

Bar d(E)

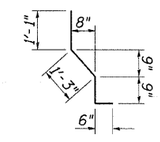

Bar d1(E)

Bar d2(E)

BILL OF MATERIAL

PER DRAIN REPLACEMENT LOCATION

BAR	NUMBER OF BARS	TOTAL	SIZE	LENGTH	SHAPE
d (E)	3	3	#4	4'-9"	L
d1(E)	3	3	#5	3'-7"	
d2(E)	2	2	#4	2'-1"	
REINFORCEMENT BARS (EPOXY COATED)				POUND	30.0
CONCRETE REMOVAL				CU YD	0.2
CONCRETE SUPERSTRUCTURE				CU YD	0.2

FILE NAME = c:\pw_work\pwidot\swartzrw\d0209400\D774487-sht-brdetails-0500084&85.dgn	USER NAME = swartzrw	DESIGNED - KLB	REVISED -
	PLOT SCALE = 20.0000 ' / IN.	DRAWN - KLB	REVISED -
	PLOT DATE = 2/7/2011	CHECKED - MEA	REVISED -
		DATE - 11/29/2010	REVISED -

STATE OF ILLINOIS
DEPARTMENT OF TRANSPORTATION

FLOOR DRAIN DETAILS
SN. 058-0084 & 85

SCALE: NA | SHEET NO. 9 OF 11 SHEETS | STA. | TO STA.

F.A.I. RTE.	SECTION	COUNTY	TOTAL SHEETS	SHEET NO.
72	*	Macon	25	23

CONTRACT NO. 74487

ILLINOIS FED. AID PROJECT

*D7 Bridge Repairs 2011-2