Illinois Department of Transportation
Division of Highways
Kaskaskia engineering Group

SOIL BORING LOG

Date 10/19/09

ROUTE I-270 DESCRIPTION Bridge over Chain of Rocks Canal LOGGED BY MDM
SECTION Bridge over Chain of Rocks Canal LOCATION , SEC.30, TWP. 4N, RNG. 9W, PM
COUNTY Madison DRILLING METHOD Hollow Stem Auger HAMMER TYPE Automatic

STRUCT. NO. 060-0345
Station
BORING NO. B-10
Station 1194+57.25
Offset 23.54ft LT
Ground Surface Elev. 443.9 ft

Surface Water Elev. ft
Stream Bed Elev. ft
Groundwater Elev.:
First Encounter 417.9 ft ▼
Upon Completion N/A ft
After Hrs. N/A ft

Description	Elev.	DEPTH (ft)	BLOWS (/6")	UCS Qu (tsf)	MOIST (%)
Dark brown SILTY CLAY, with Sand, Trace Organics			1		
			2	0.8	17
			3	P	
	440.41				
Brown Fine SAND			1		
			6		
		-5	5		
	437.91				
Brown Fine SAND, trace Silt and Gravel Sand=94%, Silt/CL=4%, Gravel=2%			5		
			7		
	436.41		8		
Gray CLAY with Sand			2		
			7	2.3	24
			10	B	
		-10			
	432.91				
Gray CLAY trace Sand			3		
			4	2.3	19
			5	S/11	
	430.41				
Brown Fine SAND, trace Clay			1		
			1		
		-15	2		
	427.91				
Brown Fine SAND			2		
			6		
			7		
			7		
		-20	11		
			15		
Brown Fine SAND *(continued)*	422.91				
Brown Fine to Medium SAND			7		
			10		
			15		
	420.41				
Brown Fine to Medium SAND, trace Clay			5		
			7		
		-25	10		
	417.91 ▼				
Brown Fine SAND			4		
			6		
			7		
	415.41				
Brown Fine SAND, trace Silt and Gravel Sand=94%, Silt/CL=5.7%, Gravel=0.2%			2		
			3		
		-30	6		
	410.41				
Gray and brown CLAYEY SILT			2		
			1		32
		-35	2		
	405.41				
Brown Fine SAND, trace Silt			5		
			6		
		-40	7		

The Unconfined Compressive Strength (UCS) Failure Mode is indicated by (B-Bulge, S-Shear, P-Penetrometer)
The SPT (N value) is the sum of the last two blow values in each sampling zone (AASHTO T206)

BBS, from 137 (Rev. 8-99)

Illinois Department of Transportation
Division of Highways
Kaskaskia engineering Group

SOIL BORING LOG

Date 10/19/09

ROUTE I-270 DESCRIPTION Bridge over Chain of Rocks Canal LOGGED BY MDM
SECTION Bridge over Chain of Rocks Canal LOCATION , SEC.30, TWP. 4N, RNG. 9W, PM
COUNTY Madison DRILLING METHOD Hollow Stem Auger HAMMER TYPE Automatic

STRUCT. NO. 060-0345
Station
BORING NO. B-10
Station 1194+57.25
Offset 23.54ft LT
Ground Surface Elev. 443.9 ft

Surface Water Elev. ft
Stream Bed Elev. ft
Groundwater Elev.:
First Encounter 417.9 ft ▼
Upon Completion N/A ft
After Hrs. N/A ft

Description	Elev.	DEPTH (ft)	BLOWS (/6")	UCS Qu (tsf)	MOIST (%)
Brown Fine SAND, trace Silt *(continued)*					
	400.41				
Brown Fine SAND, with Silt			5		
			5		
		-45	7		
	395.41				
Brown Fine to Medium SAND			7		
			8		
		-50	10		
	385.41				
Brown Fine SAND with Silt Sand=92.5%, Silt/CL=7.5%, Gravel=0%			11		
			10		
		-60	9		
Brown Fine SAND with Silt Sand=92.5%, Silt/CL=7.5%, Gravel=0% *(continued)*					
		-65			
	374.41				
Brown-gray Fine SAND		-70	8		
			16		
			18		
		-75			
		-80	8		

The Unconfined Compressive Strength (UCS) Failure Mode is indicated by (B-Bulge, S-Shear, P-Penetrometer)
The SPT (N value) is the sum of the last two blow values in each sampling zone (AASHTO T206)

BBS, from 137 (Rev. 8-99)

Illinois Department of Transportation
Division of Highways
Kaskaskia engineering Group

SOIL BORING LOG

Date 10/19/09

ROUTE I-270 DESCRIPTION Bridge over Chain of Rocks Canal LOGGED BY MDM
SECTION Bridge over Chain of Rocks Canal LOCATION , SEC.30, TWP. 4N, RNG. 9W, PM
COUNTY Madison DRILLING METHOD Hollow Stem Auger HAMMER TYPE Automatic

STRUCT. NO. 060-0345
Station
BORING NO. B-10
Station 1194+57.25
Offset 23.54ft LT
Ground Surface Elev. 443.9 ft

Surface Water Elev. ft
Stream Bed Elev. ft
Groundwater Elev.:
First Encounter 417.9 ft ▼
Upon Completion N/A ft
After Hrs. N/A ft

Description	Elev.	DEPTH (ft)	BLOWS (/6")	UCS Qu (tsf)	MOIST (%)
Brown-gray Fine SAND *(continued)*			11		
			18		
		-85			
	355.41				
Brown-gray Fine to Coarse SAND			10		
			16		
		-90	25		
		-95			
		-100	9		
			16		
			25		
Brown-gray Fine to Coarse SAND *(continued)*					
		-105			
	335.41				
Gray Fine SAND, trace Silt			15		
			18		
		-110	19		
		-115			
	325.41				
Gray-brown Medium to Coarse SAND, with Gravel			13		
			9		
		-120	7		

The Unconfined Compressive Strength (UCS) Failure Mode is indicated by (B-Bulge, S-Shear, P-Penetrometer)
The SPT (N value) is the sum of the last two blow values in each sampling zone (AASHTO T206)

BBS, from 137 (Rev. 8-99)

c:\pwworking\oma\d0549104\0600345-76A91-122-SBL.dgn
jmigus
3/15/2011
5:06:51 PM

Kaskaskia Engineering Group, LLC	USER NAME = jmigus	DESIGNED - BWC	REVISED -
	FILE NAME = 0600345-76A91-122-SBL.DGN	CHECKED - LGP	REVISED -
	PLOT SCALE = NONE	DRAWN - JM	REVISED -
	PLOT DATE = 3/18/2011	CHECKED - BSK	REVISED -

STATE OF ILLINOIS
DEPARTMENT OF TRANSPORTATION

SOIL BORING LOGS
STRUCTURE NO. 060-0345

BRIDGE SHEET NO. 122 OF 133 SHEETS

F.A.I. RTE.	SECTION	COUNTY	TOTAL SHEETS	SHEET NO.
270	60-1B-1	MADISON	712	501

CONTRACT NO. 76A91

ILLINOIS FED. AID PROJECT

Illinois Department of Transportation
Division of Highways
Kaskaskia engineering Group

SOIL BORING LOG

Page 4 of 4

Date 10/19/09

ROUTE I-270 DESCRIPTION Bridge over Chain of Rocks Canal LOGGED BY MDM

SECTION Bridge over Chain of Rocks Canal LOCATION , SEC.30, TWP. 4N, RNG. 9W, PM

COUNTY Madison DRILLING METHOD Hollow Stem Auger HAMMER TYPE Automatic

STRUCT. NO. 060-0345
Station

BORING NO. B-10
Station 1194+57.25
Offset 23.54ft LT
Ground Surface Elev. 443.9 ft

Surface Water Elev. ft
Stream Bed Elev. ft

Groundwater Elev.:
First Encounter 417.9 ft ▼
Upon Completion N/A ft
After ___ Hrs. N/A ft

Description	Elev.	DEPTH (ft)	BLOWS (/6")	UCS Qu (tsf)	MOIST (%)
Gray-brown Medium to Coarse SAND, with Gravel *(continued)*					
		-125			
Brown Medium SAND	315.41		19		
			19		
		-130	18		
		-135			
Brown Medium to Coarse SAND, with Fine Gravel	305.41		32		
			135		
	303.91	-140	50/3"		

Description	Elev.	DEPTH (ft)	BLOWS (/6")	UCS Qu (tsf)	MOIST (%)
Gravel and Cobbles					
	301.91				
Borehole continued with rock coring					
		-145			
		-150			
		-155			
		-160			

The Unconfined Compressive Strength (UCS) Failure Mode is indicated by (B-Bulge, S-Shear, P-Penetrometer)
The SPT (N value) is the sum of the last two blow values in each sampling zone (AASHTO T206)

BBS, from 137 (Rev. 8-99)

Illinois Department of Transportation
Division of Highways
Kaskaskia engineering Group

ROCK CORE LOG

Page 1 of 2

Date 10/19/09

ROUTE I-270 DESCRIPTION Bridge over Chain of Rocks Canal LOGGED BY MDM

SECTION Bridge over Chain of Rocks Canal LOCATION , SEC.30, TWP. 4N, RNG. 9W, PM

COUNTY Madison CORING METHOD Core Barrel

STRUCT. NO. 060-0345
Station

CORING BARREL TYPE & SIZE NX Wireline
Core Diameter 1.9 in
Top of Rock Elev. 301.91 ft
Begin Core Elev. 300.41 ft

BORING NO. B-10
Station 1194+57.25
Offset 23.54ft LT
Ground Surface Elev. 443.9 ft

Description	Elev.	DEPTH (ft)	CORE (#)	RECOVERY (%)	R.Q.D. (%)	CORE TIME (min/ft)	STRENGTH (tsf)
LIMESTONE: Gray,Very Finely Crystalline, Trace seams, Thick bedded			1	100	72	6	
		-145					
LIMESTONE: Gray, Very Finely Crystalline, Trace seams, Thick bedded, Vuggy	298.06		2	100	96	4	
		-150					
Core Run 2- RMR Rating 73 : II - Good Quality Rock Mass							697.0
SHALE: Gray, soft, Banded	291.51						
LIMESTONE: Gray, Finely Crystalline, Trace seams, Thick bedded	291.01						
		-155					
LIMESTONE: Gray, Very Finely Crystalline, Trace seams, Thick bedded	288.06		3	100	65		
							455.8
Core Run 3- RMR Rating 78 : II - Good Quality Rock Mass		-160					

Color pictures of the cores Yes
Cores will be stored for examination until 2012
The "Strength" column represents the uniaxial compressive strength of the core sample (ASTM D-2938)

BBS, form 138 (Rev. 8-99)

Illinois Department of Transportation
Divis on of Highways
Kaskaskia engineering Group

ROCK CORE LOG

Page 2 of 2

Date 10/19/09

ROUTE I-270 DESCRIPTION Bridge over Chain of Rocks Canal LOGGED BY MDM

SECTION Bridge over Chain of Rocks Canal LOCATION , SEC.30, TWP. 4N, RNG. 9W, PM

COUNTY Madison CORING METHOD Core Barrel

STRUCT. NO. 060-0345
Station

CORING BARREL TYPE & SIZE NX Wireline
Core Diameter 1.9 in
Top of Rock Elev. 301.91 ft
Begin Core Elev. 300.41 ft

BORING NO. B-10
Station 1194+57.25
Offset 23.54ft LT
Ground Surface Elev. 443.9 ft

Description	Elev.	DEPTH (ft)	CORE (#)	RECOVERY (%)	R.Q.D. (%)	CORE TIME (min/ft)	STRENGTH (tsf)
LIMESTONE: Gray, Very Finely Crystalline, Trace seams, Thick bedded *(continued)*							1122.5
		-165					
LIMESTONE: Gray, aphanitic, Trace seams, Thick bedded	277.96		4	100	95		
		-170					
Core Run 4- RMR Rating 85 : I - Very Good Quality Rock Mass							1454.4
	269.66						
		-175					
		-180					

Color pictures of the cores Yes
Cores will be stored for examination until 2012
The "Strength" column represents the uniaxial compressive strength of the core sample (ASTM D-2938)

BBS, form 138 (Rev. 8-99)

c:\pwworking\oma\d0549\04\0600345-76A91-123-SBL.dgn
jmlgus
3/15/2011
5:06:57 PM

Kaskaskia Engineering Group, LLC

USER NAME = jmlgus	DESIGNED - BWC	REVISED -	
FILE NAME = 0600345-76A91-123-SBL.DGN	CHECKED - LGP	REVISED -	
PLOT SCALE = NONE	DRAWN - JM	REVISED -	
PLOT DATE = 3/18/2011	CHECKED - BSK	REVISED -	

STATE OF ILLINOIS
DEPARTMENT OF TRANSPORTATION

SOIL BORING LOGS
STRUCTURE NO. 060-0345
BRIDGE SHEET NO. 123 OF 133 SHEETS

F.A.I. RTE.	SECTION	COUNTY	TOTAL SHEETS	SHEET NO.
270	60-1B-1	MADISON	712	502

CONTRACT NO. 76A91
ILLINOIS FED. AID PROJECT

Illinois Department of Transportation
Division of Highways
Kaskaskia engineering Group

SOIL BORING LOG

Date 11/14/09

ROUTE I-270 DESCRIPTION Bridge over Chain of Rocks Canal LOGGED BY IK
SECTION Bridge over Chain of Rocks Canal LOCATION , SEC.30, TWP. 4N, RNG. 9W, PM
COUNTY Madison DRILLING METHOD Hollow Stem Auger HAMMER TYPE Automatic

STRUCT. NO. 060-0345
Station
BORING NO. B-11
Station 1192+06.25
Offset 23.53ft LT
Ground Surface Elev. 448.4 ft

Surface Water Elev. ft
Stream Bed Elev. ft
Groundwater Elev.:
First Encounter 432.4 ft ▼
Upon Completion N/A ft
After ___ Hrs. N/A ft

Description	Elev.	DEPTH (ft)	BLOWS (/6")	UCS Qu (tsf)	MOIST (%)
TOPSOIL	447.86				
Brown CLAY, trace Sand			4		
			2	1.0	30
			5	P	
	444.86				
Brown Lean CLAY, with Sand			4		
	443.86		4		23
Brown Fine SAND		-5	6		
Brown Fine SAND, trace Silt			4		
			6		
			7		
	439.86				
Brown SILTY SAND			7		
			13		
		-10	14		
	437.36				
Brown SILTY SAND, trace Silt			8		
			9		
			10		
	434.86				
Brown Fine SAND			6		
			8		
	433.68				
Brown Fine SAND, with Clay		-15	6		
	432.36 ▼				
Gray CLAY, with Sand LL=30, PL=18, PI=12			4		
			4	2.3	20
			6	P	
	429.86				
Gray SANDY CLAY			5		
			8	2.8	18
		-20	10	P	
Gray SANDY CLAY *(continued)*					
			5		
			9	1.8	18
			9	P	
	424.86				
Brown CLAYEY SAND			9		
			11		13
		-25	11		
	422.36				
			6		
			7	0.5	22
			13	P	
	419.86				
Gray-brown CLAYEY SAND			9		
			16		17
		-30	20		
	414.86				
Brown SILT, with Sand	414.36		3		
Brown SILTY SAND			5		23
		-35	8		
	411.56				
Gray-brown SANDY SILT, trace Organics					
			3		
			2		36
		-40	3		

The Unconfined Compressive Strength (UCS) Failure Mode is indicated by (B-Bulge, S-Shear, P-Penetrometer)
The SPT (N value) is the sum of the last two blow values in each sampling zone (AASHTO T206)

BBS, from 137 (Rev. 8-99)

Date 11/14/09

ROUTE I-270 DESCRIPTION Bridge over Chain of Rocks Canal LOGGED BY IK
SECTION Bridge over Chain of Rocks Canal LOCATION , SEC.30, TWP. 4N, RNG. 9W, PM
COUNTY Madison DRILLING METHOD Hollow Stem Auger HAMMER TYPE Automatic

STRUCT. NO. 060-0345
Station
BORING NO. B-11
Station 1192+06.25
Offset 23.53ft LT
Ground Surface Elev. 448.4 ft

Surface Water Elev. ft
Stream Bed Elev. ft
Groundwater Elev.:
First Encounter 432.4 ft ▼
Upon Completion N/A ft
After ___ Hrs. N/A ft

Description	Elev.	DEPTH (ft)	BLOWS (/6")	UCS Qu (tsf)	MOIST (%)
Gray-brown SANDY SILT, trace Organics *(continued)*					
	406.56				
Brown SILTY SAND					
			4		
			5		28
		-45	5		
	401.56				
Brown-gray Fine SAND, with Silt					
Sand=94%, Silt/CL=6%, Gravel=0%			10		
			14		
		-50	20		
	399.86				
Brown Fine SAND, trace organics			12		
			18		
		-60	17		
Brown Fine SAND, trace organics *(continued)*					
			16		
			23		
		-65	25		
	379.86				
Brown Fine SAND, trace gravel			16		
			18		
		-70	14		
	369.86				
Brown Fine SAND, trace Gravel *(continued)*					
		-75			
		-80			

The Unconfined Compressive Strength (UCS) Failure Mode is indicated by (B-Bulge, S-Shear, P-Penetrometer)
The SPT (N value) is the sum of the last two blow values in each sampling zone (AASHTO T206)

BBS, from 137 (Rev. 8-99)

Date 11/14/09

ROUTE I-270 DESCRIPTION Bridge over Chain of Rocks Canal LOGGED BY IK
SECTION Bridge over Chain of Rocks Canal LOCATION , SEC.30, TWP. 4N, RNG. 9W, PM
COUNTY Madison DRILLING METHOD Hollow Stem Auger HAMMER TYPE Automatic

STRUCT. NO. 060-0345
Station
BORING NO. B-11
Station 1192+06.25
Offset 23.53ft LT
Ground Surface Elev. 448.4 ft

Surface Water Elev. ft
Stream Bed Elev. ft
Groundwater Elev.:
First Encounter 432.4 ft ▼
Upon Completion N/A ft
After ___ Hrs. N/A ft

Description	Elev.	DEPTH (ft)	BLOWS (/6")	UCS Qu (tsf)	MOIST (%)
Brown Fine SAND, with Silt, trace Gravel Sand=93%, Silt/CL=6%, Gravel=0.9% *(continued)*					
		85			
	359.86				
Brown Fine to Medium SAND, with Gravel			12		
			13		
		-90	9		
	349.86				
Brown Fine GRAVEL, with Sand			13		
			14		
		-100	15		
Brown Fine GRAVEL, with Sand *(continued)*					
		105			
	339.86				
Brown Fine SAND, with Gravel			20		
			20		
		-110	27		
	329.86				
Brown Fine to Medium SAND, trace rock fragments			22		
			25		
		-120	23		

The Unconfined Compressive Strength (UCS) Failure Mode is indicated by (B-Bulge, S-Shear, P-Penetrometer)
The SPT (N value) is the sum of the last two blow values in each sampling zone (AASHTO T206)

BBS, from 137 (Rev. 8-99)

c:\pwworking\oma\d0549104\0600345-76A91-124-SBL.dgn
jmigus
3/15/2011
5:07:02 PM

Kaskaskia Engineering Group, LLC	USER NAME = jmigus	DESIGNED - BWC	REVISED -
	FILE NAME = 0600345-76A91-124-SBL.DGN	CHECKED - LGP	REVISED -
	PLOT SCALE = NONE	DRAWN - JM	REVISED -
	PLOT DATE = 3/18/2011	CHECKED - BSK	REVISED -

STATE OF ILLINOIS
DEPARTMENT OF TRANSPORTATION

SOIL BORING LOGS
STRUCTURE NO. 060-0345
BRIDGE SHEET NO. 124 OF 133 SHEETS

F.A.I. RTE.	SECTION	COUNTY	TOTAL SHEETS	SHEET NO.
270	60-1B-1	MADISON	712	503
		CONTRACT NO. 76A91		
		ILLINOIS FED. AID PROJECT		

Illinois Department of Transportation
Division of Highways
Kaskaskia engineering Group

SOIL BORING LOG

Date 11/14/09

ROUTE I-270 DESCRIPTION Bridge over Chain of Rocks Canal LOGGED BY IK
SECTION Bridge over Chain of Rocks Canal LOCATION , SEC.30, TWP. 4N, RNG. 9W, PM
COUNTY Madison DRILLING METHOD Hollow Stem Auger HAMMER TYPE Automatic

STRUCT. NO. 060-0345
Station
BORING NO. B-11
Station 1192+06.25
Offset 23.53ft LT
Ground Surface Elev. 448.4 ft

Surface Water Elev. ft
Stream Bed Elev. ft
Groundwater Elev.:
First Encounter 432.4 ft ▼
Upon Completion N/A ft
After ___ Hrs. N/A ft

Description	Elev.	DEPTH (ft)	BLOWS (/6")	UCS Qu (tsf)	MOIST (%)
Brown Fine to Medium SAND, trace rock fragments *(continued)*		-125			
Gray Fine to Medium SAND, trace Gravel	319.86	-130	21 23 23		
		-135			
		-140	24 24 18		

Description	Elev.	DEPTH (ft)	BLOWS (/6")	UCS Qu (tsf)	MOIST (%)
Gray Fine to Medium SAND, trace Gravel *(continued)*		-145			
Borehole continued with rock coring	302.36				
		-150			
		-155			
		-160			

The Unconfined Compressive Strength (UCS) Failure Mode is indicated by (B-Bulge, S-Shear, P-Penetrometer)
The SPT (N value) is the sum of the last two blow values in each sampling zone (AASHTO T206)

BBS, from 137 (Rev. 8-99)

Illinois Department of Transportation
Division of Highways
Kaskaskia engineering Group

ROCK CORE LOG

Date 11/14/09

ROUTE I-270 DESCRIPTION Bridge over Chain of Rocks Canal LOGGED BY IK
SECTION Bridge over Chain of Rocks Canal LOCATION , SEC.30, TWP. 4N, RNG. 9W, PM
COUNTY Madison CORING METHOD Core Barrel

STRUCT. NO. 060-0345
Station
BORING NO. B-11
Station 1192+06.25
Offset 23.53ft LT
Ground Surface Elev. 448.4 ft

CORING BARREL TYPE & SIZE NX Wireline
Core Diameter 1.9 in
Top of Rock Elev. 302.36 ft
Begin Core Elev. 302.36 ft

Description	Elev.	DEPTH (ft)	CORE (#)	RECOVERY (%)	R.Q.D. (%)	CORE TIME (min/ft)	STRENGTH (tsf)
LIMESTONE: Gray, Finely Crystalline, trace seams, Massive bedded	302.36		1	91	63	5	
Core Run 1- RMR Rating 73 : II - Good Quality Rock Mass							703.4
	299.36	-150	2	100	85	5	
LIMESTONE: Gray, Finely Crystalline, Trace seams, Massive bedded SHALE: Gray, soft, banded	293.11	-155					
Core Run 2- RMR Rating 77 : II - Good Quality Rock Mass							779.8
LIMESTONE: Gray, Finely Crystalline, Trace seams, Massive bedded	289.36	-160	3	90	74	4	
Core Run 3- RMR Rating 74 : II - Good Quality Rock Mass		-165					

Color pictures of the cores Yes
Cores will be stored for examination until 2012
The "Strength" column represents the uniaxial compressive strength of the core sample (ASTM D-2938)

BBS, form 138 (Rev. 8-99)

Illinois Department of Transportation
Division of Highways
Kaskaskia engineering Group

ROCK CORE LOG

Date 11/14/09

ROUTE I-270 DESCRIPTION Bridge over Chain of Rocks Canal LOGGED BY IK
SECTION Bridge over Chain of Rocks Canal LOCATION , SEC.30, TWP. 4N, RNG. 9W, PM
COUNTY Madison CORING METHOD Core Barrel

STRUCT. NO. 060-0345
Station
BORING NO. B-11
Station 1192+06.25
Offset 23.53ft LT
Ground Surface Elev. 448.4 ft

CORING BARREL TYPE & SIZE NX Wireline
Core Diameter 1.9 in
Top of Rock Elev. 302.36 ft
Begin Core Elev. 302.36 ft

Description	Elev.	DEPTH (ft)	CORE (#)	RECOVERY (%)	R.Q.D. (%)	CORE TIME (min/ft)	STRENGTH (tsf)
LIMESTONE: Gray, Finely Crystalline, Trace seams, Massive bedded *(continued)*							528.5
LIMESTONE: Gray, Finely Crystalline, Trace seams, Massive bedded	279.36	-170	4	100	96	6.5	
Core Run 4- RMR Rating 80 : II - Good Quality Rock Mass		-175					689.0
	271.36	-180					
		-185					

Color pictures of the cores Yes
Cores will be stored for examination until 2012
The "Strength" column represents the uniaxial compressive strength of the core sample (ASTM D-2938)

BBS, form 138 (Rev. 8-99)

c:\pwworking\omo\d0549104\0600345-76A91-I25-SBL.dgn
jmigus
3/15/2011 5:07:08 PM

Kaskaskia Engineering Group, LLC

USER NAME = jmigus	DESIGNED - BWC	REVISED -	
FILE NAME = 0600345-76A91-125-SBL.DGN	CHECKED - LGP	REVISED -	
PLOT SCALE = NONE	DRAWN - JM	REVISED -	
PLOT DATE = 3/18/2011	CHECKED - BSK	REVISED -	

STATE OF ILLINOIS
DEPARTMENT OF TRANSPORTATION

SOIL BORING LOGS
STRUCTURE NO. 060-0345
BRIDGE SHEET NO. 125 OF 133 SHEETS

F.A.I. RTE.	SECTION	COUNTY	TOTAL SHEETS	SHEET NO.
270	60-1B-1	MADISON	712	504
		CONTRACT NO. 76A91		
		ILLINOIS FED. AID PROJECT		

Illinois Department of Transportation
Division of Highways
Kaskaskia engineering Group

SOIL BORING LOG

Page 1 of 4

Date 11/2/09

ROUTE I-270 DESCRIPTION Bridge over Chain of Rocks Canal LOGGED BY MDM

SECTION Bridge over Chain of Rocks Canal LOCATION , SEC.30, TWP. 4N, RNG. 9W, PM

COUNTY Madison DRILLING METHOD Hollow Stem Auger HAMMER TYPE Automatic

STRUCT. NO. 060-0345
Station

BORING NO. B-12
Station 1192+06.25
Offset 23.53ft RT
Ground Surface Elev. 460.1 ft

Surface Water Elev. ft
Stream Bed Elev. ft

Groundwater Elev.:
First Encounter 433.6 ft ▼
Upon Completion N/A ft
After Hrs. N/A ft

Description	Elev.	DEPTH (ft)	BLOWS (/6")	UCS Qu (tsf)	MOIST (%)
Brown CLAYEY SILT, with Sand			3		
			3	0.8	19
			5	P	
Brown Fat CLAY	456.58		1		
			4		30
Brown Fine SAND	455.58	-5	3		
Brown Fine SAND, with Silt	454.08		2		
			2	0.3	27
			4	P	
Brown SILT, with Sand Dry Unit Weight=104.7pcf	452.08				11
		-10			
Brown SANDY SILT	449.08		8		
			11		17
			13		
Brown Lean CLAY, trace Sand	446.58		8		
			7		19
		-15	11		
Brown Fine SAND, with Silt	444.08		8		
			10		11
			8		
Gray-brown Fat CLAY, with Sand	441.58		6		
			10	3.5	27
		-20	8	P	
Gray-brown Fat CLAY, with Sand *(continued)*	439.08				
Gray-brown SILTY SAND Dry Unit Weight=96.5pcf					17
	436.58				
Gray-brown CLAYEY SAND, with Silt			9		
			12		20
		-25	13		
Brown SILTY SAND	434.08		5		
		▼	11		21
			15		
Brown Fine SAND, with Silt	431.58		8		
			13		13
		-30	12		
Gray SILTY SAND Sand=66.4%, Silt/CL=33.6% Gravel=0%	428.08		8		
			13		22
		-35	16		
Brown SILTY SAND	421.58		8		
			12		19
		-40	17		

The Unconfined Compressive Strength (UCS) Failure Mode is indicated by (B-Bulge, S-Shear, P-Penetrometer)
The SPT (N value) is the sum of the last two blow values in each sampling zone (AASHTO T206)

BBS, from 137 (Rev. 8-99)

Illinois Department of Transportation
Division of Highways
Kaskaskia engineering Group

SOIL BORING LOG

Page 2 of 4

Date 11/2/09

ROUTE I-270 DESCRIPTION Bridge over Chain of Rocks Canal LOGGED BY MDM

SECTION Bridge over Chain of Rocks Canal LOCATION , SEC.30, TWP. 4N, RNG. 9W, PM

COUNTY Madison DRILLING METHOD Hollow Stem Auger HAMMER TYPE Automatic

STRUCT. NO. 060-0345
Station

BORING NO. B-12
Station 1192+06.25
Offset 23.53ft RT
Ground Surface Elev. 460.1 ft

Surface Water Elev. ft
Stream Bed Elev. ft

Groundwater Elev.:
First Encounter 433.6 ft ▼
Upon Completion N/A ft
After Hrs. N/A ft

Description	Elev.	DEPTH (ft)	BLOWS (/6")	UCS Qu (tsf)	MOIST (%)
Brown SILTY SAND *(continued)*					
Gray Fat CLAY	416.58		5		
			5	3.0	32
		-45	7		
Gray SILT LL=26, PL=27	411.58		6		
			7		27
		-50	7		
		-55			
Gray Fine SAND, trace Silt Sand=93.5%, Silt/CL=6.5%, Gravel=0%	401.58		9		
			10		
		-60	19		
Gray Fine SAND, trace Silt Sand=93.5%, Silt/CL=6.5%, Gravel=0% *(continued)*					
		-65			
Gray SANDY SILT	391.58		8		
			13		25
		-70	18		
		-75			
Gray Fine to Medium SAND, trace Gravel and Silt	381.58		15		
			26		
		-80	25		

The Unconfined Compressive Strength (UCS) Failure Mode is indicated by (B-Bulge, S-Shear, P-Penetrometer)
The SPT (N value) is the sum of the last two blow values in each sampling zone (AASHTO T206)

BBS, from 137 (Rev. 8-99)

Illinois Department of Transportation
Division of Highways
Kaskaskia engineering Group

SOIL BORING LOG

Page 3 of 4

Date 11/2/09

ROUTE I-270 DESCRIPTION Bridge over Chain of Rocks Canal LOGGED BY MDM

SECTION Bridge over Chain of Rocks Canal LOCATION , SEC.30, TWP. 4N, RNG. 9W, PM

COUNTY Madison DRILLING METHOD Hollow Stem Auger HAMMER TYPE Automatic

STRUCT. NO. 060-0345
Station

BORING NO. B-12
Station 1192+06.25
Offset 23.53ft RT
Ground Surface Elev. 460.1 ft

Surface Water Elev. ft
Stream Bed Elev. ft

Groundwater Elev.:
First Encounter 433.6 ft ▼
Upon Completion N/A ft
After Hrs. N/A ft

Description	Elev.	DEPTH (ft)	BLOWS (/6")	UCS Qu (tsf)	MOIST (%)
Gray Fine to Medium SAND, trace Gravel and Silt *(continued)*					
		-85			
Gray Fine to Medium SAND, with Silt, trace Gravel	371.58		18		
			15		20
		-90	17		
		-95			
Brown-gray Fine SAND, trace Clay	361.58		13		
			20		
		-100	13		
Brown-gray Fine SAND, trace Clay *(continued)*					
		-105			
Gray Fine to Coarse SAND, with Gravel	351.58		16		
			24		
		-110	21		
		-115			
Gray Fine to Medium SAND, trace Silt	341.58		10		
			12		
		-120	16		

The Unconfined Compressive Strength (UCS) Failure Mode is indicated by (B-Bulge, S-Shear, P-Penetrometer)
The SPT (N value) is the sum of the last two blow values in each sampling zone (AASHTO T206)

BBS, from 137 (Rev. 8-99)

c:\pwworking\oma\d0549\04\0600345-76A91-126-SBL.dgn
jmigus

3/15/2011
5:07:13 PM

Kaskaskia Engineering Group, LLC			
USER NAME = jmigus	DESIGNED - BWC	REVISED -	STATE OF ILLINOIS DEPARTMENT OF TRANSPORTATION
FILE NAME = 0600345-76A91-126-SBL.DGN	CHECKED - LGP	REVISED -	
PLOT SCALE = NONE	DRAWN - JM	REVISED -	
PLOT DATE = 3/18/2011	CHECKED - BSK	REVISED -	

SOIL BORING LOGS
STRUCTURE NO. 060-0345
BRIDGE SHEET NO. 126 OF 133 SHEETS

F.A.I. RTE.	SECTION	COUNTY	TOTAL SHEETS	SHEET NO.
270	60-1B-1	MADISON	712	505
		CONTRACT NO. 76A91		
		ILLINOIS FED. AID PROJECT		

Illinois Department of Transportation
Division of Highways
Kaskaskia engineering Group

SOIL BORING LOG

Date 11/2/09

ROUTE I-270 DESCRIPTION Bridge over Chain of Rocks Canal LOGGED BY MDM
SECTION Bridge over Chain of Rocks Canal LOCATION , SEC.30, TWP. 4N, RNG. 9W, PM
COUNTY Madison DRILLING METHOD Hollow Stem Auger HAMMER TYPE Automatic

STRUCT. NO. 060-0345
Station
BORING NO. B-12
Station 1192+06.25
Offset 23.53ft RT
Ground Surface Elev. 460.1 ft

Surface Water Elev. ft
Stream Bed Elev. ft
Groundwater Elev.:
First Encounter 433.6 ft ▼
Upon Completion N/A ft
After Hrs. N/A ft

Description	Elev.	DEPTH (ft)	BLOWS (/6")	UCS Qu (tsf)	MOIST (%)
Gray Fine to Medium SAND, trace Silt *(continued)*		-125			
Gray Fine SAND	331.58	-130	10 10 19		
		-135			
Gray Fine SAND, trace Gravel	321.58	-140	9 22 27		

Description	Elev.	DEPTH (ft)	BLOWS (/6")	UCS Qu (tsf)	MOIST (%)
Gray Fine SAND, trace Gravel *(continued)*		-145			
Gray Medium to Coarse SAND, with Gravel, trace Silt	311.58	-150	17 18 41		
		-155			
Borehole continued with rock coring	302.58	-160			

The Unconfined Compressive Strength (UCS) Failure Mode is indicated by (B-Bulge, S-Shear, P-Penetrometer)
The SPT (N value) is the sum of the last two blow values in each sampling zone (AASHTO T206)

BBS, from 137 (Rev. 8-99)

Illinois Department of Transportation
Division of Highways
Kaskaskia engineering Group

ROCK CORE LOG

Date 11/2/09

ROUTE I-270 DESCRIPTION Bridge over Chain of Rocks Canal LOGGED BY MDM
SECTION Bridge over Chain of Rocks Canal LOCATION , SEC.30, TWP. 4N, RNG. 9W, PM
COUNTY Madison CORING METHOD Core Barrel

STRUCT. NO. 060-0345
Station
BORING NO. B-12
Station 1192+06.25
Offset 23.53ft RT
Ground Surface Elev. 460.1 ft

CORING BARREL TYPE & SIZE NX Wireline
Core Diameter 1.9 in
Top of Rock Elev. 302.58 ft
Begin Core Elev. 301.58 ft

Description	Elev.	DEPTH (ft)	CORE (#)	RECOVERY (%)	R.Q.D. (%)	CORE TIME (min/ft)	STRENGTH (tsf)
LIMESTONE: Gray, Finely Crystalline, trace seams, Massive bedded	301.58	-160	1	100	85	6	
Core Run 2- RMR Rating 73 : II - Good Quality Rock Mass	296.58	-165	2	100	53	4	817.2
SHALE: Gray, soft, banded LIMESTONE: Gray, Finely Crystalline, trace seams, Massive bedded	292.58	-170	3	100	73	4	
	287.83	-175	4	100	60	3.5	
		-180	5	100	56	3.5	

Color pictures of the cores Yes
Cores will be stored for examination until 2012
The "Strength" column represents the uniaxial compressive strength of the core sample (ASTM D-2938)

BBS, form 138 (Rev. 8-99)

Illinois Department of Transportation
Division of Highways
Kaskaskia engineering Group

ROCK CORE LOG

Date 11/2/09

ROUTE I-270 DESCRIPTION Bridge over Chain of Rocks Canal LOGGED BY MDM
SECTION Bridge over Chain of Rocks Canal LOCATION , SEC.30, TWP. 4N, RNG. 9W, PM
COUNTY Madison CORING METHOD Core Barrel

STRUCT. NO. 060-0345
Station
BORING NO. B-12
Station 1192+06.25
Offset 23.53ft RT
Ground Surface Elev. 460.1 ft

CORING BARREL TYPE & SIZE NX Wireline
Core Diameter 1.9 in
Top of Rock Elev. 302.58 ft
Begin Core Elev. 301.58 ft

Description	Elev.	DEPTH (ft)	CORE (#)	RECOVERY (%)	R.Q.D. (%)	CORE TIME (min/ft)	STRENGTH (tsf)
		-180					
LIMESTONE: Gray, Finely Crystalline, trace seams, Massive bedded		-185	6	100	86	3.5	
Core Run 6- RMR Rating 82 : I - Very Good Quality Rock Mass	271.92	-190					1211.8
		-195					

Color pictures of the cores Yes
Cores will be stored for examination until 2012
The "Strength" column represents the uniaxial compressive strength of the core sample (ASTM D-2938)

BBS, form 138 (Rev. 8-99)

c:\pwworking\oma\d0549\04\0600345-76A91-127-SBL.dgn
jmigus
3/15/2011 5:07:19 PM

Kaskaskia Engineering Group, LLC	USER NAME = jmigus	DESIGNED - BWC	REVISED -
	FILE NAME = 0600345-76A91-127-SBL.DGN	CHECKED - LGP	REVISED -
	PLOT SCALE = NONE	DRAWN - JM	REVISED -
	PLOT DATE = 3/18/2011	CHECKED - BSK	REVISED -

STATE OF ILLINOIS
DEPARTMENT OF TRANSPORTATION

SOIL BORING LOGS
STRUCTURE NO. 060-0345
BRIDGE SHEET NO. 127 OF 133 SHEETS

F.A.I. RTE.	SECTION	COUNTY	TOTAL SHEETS	SHEET NO.
270	60-1B-1	MADISON	712	506

CONTRACT NO. 76A91
ILLINOIS FED. AID PROJECT

Illinois Department of Transportation
Division of Highways
Kaskaskia engineering Group

SOIL BORING LOG

Page 1 of 4

Date 10/14/09

ROUTE I-270 DESCRIPTION Bridge over Chain of Rocks Canal LOGGED BY MDM

SECTION Bridge over Chain of Rocks Canal LOCATION , SEC.30, TWP. 4N, RNG. 9W, PM

COUNTY Madison DRILLING METHOD Hollow Stem Auger HAMMER TYPE Automatic

STRUCT. NO. 060-0345
Station

BORING NO. B-13
Station 1209+57.50
Offset 246.88ft LT
Ground Surface Elev. 445.2 ft

Surface Water Elev. ft
Stream Bed Elev. ft

Groundwater Elev.:
First Encounter 410.7 ft ▼
Upon Completion N/A ft
After ___ Hrs. N/A ft

Description	Elev.	DEPTH (ft)	BLOWS (/6")	UCS Qu (tsf)	MOIST (%)
Brown SILTY CLAY with Fine Sand			3		
			5	0.4	22
			6	S/8	
	441.24				
Brown Fine SAND			2		
		-5	2		
			4		
	438.74				
Brown Fine SAND, trace Gravel			1		
			2		
			1		
	436.24				
Brown Fine SAND			1		
		-10	2		
			1		
	433.74				
Brown Fine SAND, trace Silty Clay			2		
			3		
			3		
	431.24				
Brown Fine SAND, trace coarse Sand and Gravel			1		
		-15	1		
			4		
	428.74				
Brown Fine SAND			4		
			5		
			4		
	426.24				
Brown Fine SAND, trace Silt			3		
		-20	4		
Brown Fine SAND, trace Silt (continued)			6		
	421.24				
Brown Fine SAND			4		
		-25	7		
			7		
	411.24				
Gray CLAYEY SILT with Fine Sand			3		
		-35	3		25
			3		
	406.24				
Brown-gray SILTY SAND			6		
		-40	5		

The Unconfined Compressive Strength (UCS) Failure Mode is indicated by (B-Bulge, S-Shear, P-Penetrometer)
The SPT (N value) is the sum of the last two blow values in each sampling zone (AASHTO T206)

BBS, from 137 (Rev. 8-99)

Illinois Department of Transportation
Division of Highways
Kaskaskia engineering Group

SOIL BORING LOG

Page 2 of 4

Date 10/14/09

ROUTE I-270 DESCRIPTION Bridge over Chain of Rocks Canal LOGGED BY MDM

SECTION Bridge over Chain of Rocks Canal LOCATION , SEC.30, TWP. 4N, RNG. 9W, PM

COUNTY Madison DRILLING METHOD Hollow Stem Auger HAMMER TYPE Automatic

STRUCT. NO. 060-0345
Station

BORING NO. B-13
Station 1209+57.50
Offset 246.88ft LT
Ground Surface Elev. 445.2 ft

Surface Water Elev. ft
Stream Bed Elev. ft

Groundwater Elev.:
First Encounter 410.7 ft ▼
Upon Completion N/A ft
After ___ Hrs. N/A ft

Description	Elev.	DEPTH (ft)	BLOWS (/6")	UCS Qu (tsf)	MOIST (%)
Brown-gray SILTY SAND (continued)			4		
L.L.=25, PL=25			7		
		-45	10		
			9		
	396.24				
Gray Fine SAND			12		
		-50	14		
			17		
			8		
		-55	7		
			10		
	386.24				
			7		
		-60	8		
Brown Fine to Medium SAND with Silt, trace Gravel Sand=93.1%, Silt/CL=5.7, Gravel=1.2% (continued)			8		
		-65			
	378.24				
Gray Fine SAND with Silt, trace Gravel Sand=94.8%, Silt/CL=5%, Gravel=0.2%			13		
		-70	17		
			15		
		-75			
	366.24				
Gray Fine SAND with Gravel			21		
		-80	16		

The Unconfined Compressive Strength (UCS) Failure Mode is indicated by (B-Bulge, S-Shear, P-Penetrometer)
The SPT (N value) is the sum of the last two blow values in each sampling zone (AASHTO T206)

BBS, from 137 (Rev. 8-99)

Illinois Department of Transportation
Division of Highways
Kaskaskia engineering Group

SOIL BORING LOG

Page 3 of 4

Date 10/14/09

ROUTE I-270 DESCRIPTION Bridge over Chain of Rocks Canal LOGGED BY MDM

SECTION Bridge over Chain of Rocks Canal LOCATION , SEC.30, TWP. 4N, RNG. 9W, PM

COUNTY Madison DRILLING METHOD Hollow Stem Auger HAMMER TYPE Automatic

STRUCT. NO. 060-0345
Station

BORING NO. B-13
Station 1209+57.50
Offset 246.88ft LT
Ground Surface Elev. 445.2 ft

Surface Water Elev. ft
Stream Bed Elev. ft

Groundwater Elev.:
First Encounter 410.7 ft ▼
Upon Completion N/A ft
After ___ Hrs. N/A ft

Description	Elev.	DEPTH (ft)	BLOWS (/6")	UCS Qu (tsf)	MOIST (%)
Gray Fine SAND with Gravel (continued)			13		
		-85			
	356.24				
Gray Fine SAND			11		
		-90	12		
			15		
		-95			
	346.24				
Gray Fine SAND with Gravel			11		
		-100	12		
Gray Fine SAND with Gravel (continued)			14		
		-105			
	336.24				
Gray Medium SAND, trace Gravel			12		
		-110	11		
			16		
		-115			
	326.24				
Gray Medium SAND with Gravel			16		
		-120	14		

The Unconfined Compressive Strength (UCS) Failure Mode is indicated by (B-Bulge, S-Shear, P-Penetrometer)
The SPT (N value) is the sum of the last two blow values in each sampling zone (AASHTO T206)

BBS, from 137 (Rev. 8-99)

c:\pwworking\oma\d0549\04\0600345-76A91-128-SBL.dgn
jmigus
3/15/2011
5:07:25 PM

Kaskaskia Engineering Group, LLC			
USER NAME = jmigus	DESIGNED - BWC	REVISED -	STATE OF ILLINOIS DEPARTMENT OF TRANSPORTATION
FILE NAME = 0600345-76A91-128-SBL.DGN	CHECKED - LGP	REVISED -	
PLOT SCALE = NONE	DRAWN - JM	REVISED -	
PLOT DATE = 3/18/2011	CHECKED - BSK	REVISED -	

SOIL BORING LOGS
STRUCTURE NO. 060-0345
BRIDGE SHEET NO. 128 OF 133 SHEETS

F.A.I. RTE.	SECTION	COUNTY	TOTAL SHEETS	SHEET NO.
270	60-1B-1	MADISON	712	507
		CONTRACT NO. 76A91		
		ILLINOIS FED. AID PROJECT		

Illinois Department of Transportation
Division of Highways
Kaskaskia engineering Group

SOIL BORING LOG

Page 4 of 4

Date 10/14/09

ROUTE I-270 DESCRIPTION Bridge over Chain of Rocks Canal LOGGED BY MDM

SECTION Bridge over Chain of Rocks Canal LOCATION , SEC.30, TWP. 4N, RNG. 9W, PM

COUNTY Madison DRILLING METHOD Hollow Stem Auger HAMMER TYPE Automatic

STRUCT. NO. 060-0345
Station

BORING NO. B-13
Station 1209+57.50
Offset 246.88ft LT
Ground Surface Elev. 445.2 ft

Surface Water Elev. ft
Stream Bed Elev. ft

Groundwater Elev.:
First Encounter 410.7 ft ▼
Upon Completion N/A ft
After ___ Hrs. N/A ft

Description	Elev.	DEPTH (ft)	BLOWS (/6")	UCS Qu (tsf)	MOIST (%)
Gray Medium SAND with Gravel *(continued)*			12		
		-125			
Gray Medium SAND, trace Gravel	316.24		10		
		-130	17		
			30		
		-135			
Brown-gray Fine SAND	306.24		21		
		-140	23		

Description	Elev.	DEPTH (ft)	BLOWS (/6")	UCS Qu (tsf)	MOIST (%)
Brown-gray Fine SAND *(continued)*			27		
Cobbles, Gravel, and Boulders					
		-145			
Terminated in Cobbles	299.24				
		-150			
		-155			
		-160			

The Unconfined Compressive Strength (UCS) Failure Mode is indicated by (B-Bulge, S-Shear, P-Penetrometer)
The SPT (N value) is the sum of the last two blow values in each sampling zone (AASHTO T206)

BBS, from 137 (Rev. 8-99)

Illinois Department of Transportation
Division of Highways
Kaskaskia engineering Group

SOIL BORING LOG

Page 1 of 4

Date 10/20/09

ROUTE I-270 DESCRIPTION Bridge over Chain of Rocks Canal LOGGED BY MDM

SECTION Bridge over Chain of Rocks Canal LOCATION , SEC.30, TWP. 4N, RNG. 9W, PM

COUNTY Madison DRILLING METHOD Hollow Stem Auger HAMMER TYPE Automatic

STRUCT. NO. 060-0345
Station

BORING NO. B-14
Station 1209+66.93
Offset 58.62ft LT
Ground Surface Elev. 435.8 ft

Surface Water Elev. ft
Stream Bed Elev. ft

Groundwater Elev.:
First Encounter 412.3 ft ▼
Upon Completion N/A ft
After ___ Hrs. N/A ft

Description	Elev.	DEPTH (ft)	BLOWS (/6")	UCS Qu (tsf)	MOIST (%)
Brown SANDY SILT, trace roots			2		
			5	1.5	23
			5	P	
			2		
			3	1.0	20
		-5	5	P	
Brown Fine SAND	429.51		3		
			5		
			9		
			2		
			3		
		-10	4		
Brown Fine to Medium SAND	424.81		1		
			1		
			1		
Gray-brown Fine SAND with Silt, trace coarse Sand and Gravel Sand=92.8%, Silt/CL=6.5%, Gravel=0.7%	422.31		1		
			2		
		-15	5		
Brown Fine SAND with gravel, trace Silt Sand=87.3%, Silt/CL=2.2%, Gravel=10.5%	419.81		4		
			13		
			19		
Brown Fine SAND, trace Clay	417.31		4		
		-20	15		

Description	Elev.	DEPTH (ft)	BLOWS (/6")	UCS Qu (tsf)	MOIST (%)
Brown Fine SAND, trace Clay *(continued)*					
Brown Fine SAND, trace Silt	412.81		5		
			7		
		-25	11		
Gray SILTY SAND	409.01		2		
			2		
		-30	2		
			1		
			1		
		-35	3		
Gray Fine SAND	399.01		10		
			11		
		-40	12		

The Unconfined Compressive Strength (UCS) Failure Mode is indicated by (B-Bulge, S-Shear, P-Penetrometer)
The SPT (N value) is the sum of the last two blow values in each sampling zone (AASHTO T206)

BBS, from 137 (Rev. 8-99)

Illinois Department of Transportation
Division of Highways
Kaskaskia engineering Group

SOIL BORING LOG

Page 2 of 4

Date 10/20/09

ROUTE I-270 DESCRIPTION Bridge over Chain of Rocks Canal LOGGED BY MDM

SECTION Bridge over Chain of Rocks Canal LOCATION , SEC.30, TWP. 4N, RNG. 9W, PM

COUNTY Madison DRILLING METHOD Hollow Stem Auger HAMMER TYPE Automatic

STRUCT. NO. 060-0345
Station

BORING NO. B-14
Station 1209+66.93
Offset 58.62ft LT
Ground Surface Elev. 435.8 ft

Surface Water Elev. ft
Stream Bed Elev. ft

Groundwater Elev.:
First Encounter 412.3 ft ▼
Upon Completion N/A ft
After ___ Hrs. N/A ft

Description	Elev.	DEPTH (ft)	BLOWS (/6")	UCS Qu (tsf)	MOIST (%)
Gray Fine SAND *(continued)*			8		
			15		
		-45	23		
Gray Fine to coarse SAND	387.31		12		
			14		
		-50	15		
Gray Fine SAND	382.31		16		
			22		
		-55	27		
Gray Fine to coarse SAND	377.31		15		
			16		
		-60	21		

Description	Elev.	DEPTH (ft)	BLOWS (/6")	UCS Qu (tsf)	MOIST (%)
Gray Fine to coarse SAND *(continued)*					
		-65			
			5		
			5		
		-70	5		
		-75			
		-80	9		

The Unconfined Compressive Strength (UCS) Failure Mode is indicated by (B-Bulge, S-Shear, P-Penetrometer)
The SPT (N value) is the sum of the last two blow values in each sampling zone (AASHTO T206)

BBS, from 137 (Rev. 8-99)

c:\pwworking\oma\d0549\04\0600345-76A91-129-SBL.dgn
jmigus

3/15/2011
5:07:31 PM

Kaskaskia Engineering Group, LLC

USER NAME = jmigus	DESIGNED - BWC	REVISED -	
FILE NAME = 0600345-76A91-129-SBL.DGN	CHECKED - LGP	REVISED -	
PLOT SCALE = NONE	DRAWN - JM	REVISED -	
PLOT DATE = 3/18/2011	CHECKED - BSK	REVISED -	

STATE OF ILLINOIS
DEPARTMENT OF TRANSPORTATION

SOIL BORING LOGS
STRUCTURE NO. 060-0345

BRIDGE SHEET NO. 129 OF 133 SHEETS

F.A.I. RTE.	SECTION	COUNTY	TOTAL SHEETS	SHEET NO.
270	60-1B-1	MADISON	712	508
		CONTRACT NO. 76A91		
		ILLINOIS FED. AID PROJECT		

Illinois Department of Transportation
Division of Highways
Kaskaskia engineering Group

SOIL BORING LOG

Page 3 of 4

Date 10/20/09

ROUTE I-270 DESCRIPTION Bridge over Chain of Rocks Canal LOGGED BY MDM

SECTION Bridge over Chain of Rocks Canal LOCATION , SEC.30, TWP. 4N, RNG. 9W, PM

COUNTY Madison DRILLING METHOD Hollow Stem Auger HAMMER TYPE Automatic

STRUCT. NO. 060-0345
Station

BORING NO. B-14
Station 1209+66.93
Offset 58.62ft LT
Ground Surface Elev. 435.8 ft

Surface Water Elev. ft
Stream Bed Elev. ft

Groundwater Elev.:
First Encounter 412.3 ft ▼
Upon Completion N/A ft
After ___ Hrs. N/A ft

Description	Elev.	DEPTH (ft)	BLOWS (/6")	UCS Qu (tsf)	MOIST (%)
Gray Fine to coarse SAND *(continued)*		-85	6 7 8		
		-90			
		-95			
		-100	14 20 21		
Gray Fine to coarse SAND *(continued)*		-105			
	327.31				
Gray Fine to coarse SAND, trace Gravel		-110	11 14 14		
		-115			
		-120	12 11 16		

The Unconfined Compressive Strength (UCS) Failure Mode is indicated by (B-Bulge, S-Shear, P-Penetrometer)
The SPT (N value) is the sum of the last two blow values in each sampling zone (AASHTO T206)

BBS, from 137 (Rev. 8-99)

Illinois Department of Transportation
Division of Highways
Kaskaskia engineering Group

SOIL BORING LOG

Page 4 of 4

Date 10/20/09

ROUTE I-270 DESCRIPTION Bridge over Chain of Rocks Canal LOGGED BY MDM

SECTION Bridge over Chain of Rocks Canal LOCATION , SEC.30, TWP. 4N, RNG. 9W, PM

COUNTY Madison DRILLING METHOD Hollow Stem Auger HAMMER TYPE Automatic

STRUCT. NO. 060-0345
Station

BORING NO. B-14
Station 1209+66.93
Offset 58.62ft LT
Ground Surface Elev. 435.8 ft

Surface Water Elev. ft
Stream Bed Elev. ft

Groundwater Elev.:
First Encounter 412.3 ft ▼
Upon Completion N/A ft
After ___ Hrs. N/A ft

Description	Elev.	DEPTH (ft)	BLOWS (/6")	UCS Qu (tsf)	MOIST (%)
Gray Fine to coarse SAND, trace Gravel *(continued)*		-125			
Gray Fine to coarse SAND, trace Gravel and Silt		-130	28 34 50		
Gray SAND, glacial	306.06				
Brown-gray Coarse SAND with Fine Gravel	304.81	-135			
Cobbles and Boulders		-140			
	298.31				

The Unconfined Compressive Strength (UCS) Failure Mode is indicated by (B-Bulge, S-Shear, P-Penetrometer)
The SPT (N value) is the sum of the last two blow values in each sampling zone (AASHTO T206)

BBS, from 137 (Rev. 8-99)

Illinois Department of Transportation
Division of Highways
Kaskaskia engineering Group

SOIL BORING LOG

Page 1 of 4

Date 9/28/09

ROUTE I-270 DESCRIPTION Bridge over Chain of Rocks Canal LOGGED BY MDM

SECTION Bridge over Chain of Rocks Canal LOCATION , SEC.30, TWP. 4N, RNG. 9W, PM

COUNTY Madison DRILLING METHOD Hollow Stem Auger HAMMER TYPE Automatic

STRUCT. NO. 060-0345
Station

BORING NO. B-15
Station 1208+17.74
Offset 179.08ft RT
Ground Surface Elev. 428.0 ft

Surface Water Elev. ft
Stream Bed Elev. ft

Groundwater Elev.:
First Encounter 413.9 ft ▼
Upon Completion N/A ft
After ___ Hrs. N/A ft

Description	Elev.	DEPTH (ft)	BLOWS (/6")	UCS Qu (tsf)	MOIST (%)
Brown Fine SILTY SAND			2 3 4		
	423.98				
Brown Fine SAND		-5	2 6 7		
			2 4 4		
	418.98				
Brown Fine to Coarse SAND		-10	2 3 4		
	416.48				
Brown Fine SAND, trace Silt		-15	2 2 3 ▼ 1 2 2		
	411.48				
Brown-gray Fine CLAYEY SAND		-20	0 1 1 0 0	34 38	
Brown-gray Fine CLAYEY SAND *(continued)*			1		
	403.98				
Dark gray CLAY, trace Sand		-25	1 0 1	29	
	398.98				
Brown-gray Fine to Coarse SAND		-30	4 3 5		
		-35	2 3 4		
	388.98				
Gray Fine SAND		-40	4 4		

The Unconfined Compressive Strength (UCS) Failure Mode is indicated by (B-Bulge, S-Shear, P-Penetrometer)
The SPT (N value) is the sum of the last two blow values in each sampling zone (AASHTO T206)

BBS, from 137 (Rev. 8-99)

c:\pwworking\omc\d0549\04\0600345-76A91-130-SBL.dgn
jmigus
3/15/2011 5:07:36 PM

Kaskaskia Engineering Group, LLC

USER NAME = jmigus	DESIGNED - BWC	REVISED -	
FILE NAME = 0600345-76A91-130-SBL.DGN	CHECKED - LGP	REVISED -	
PLOT SCALE = NONE	DRAWN - JM	REVISED -	
PLOT DATE = 3/18/2011	CHECKED - BSK	REVISED -	

STATE OF ILLINOIS
DEPARTMENT OF TRANSPORTATION

SOIL BORING LOGS
STRUCTURE NO. 060-0345
BRIDGE SHEET NO. 130 OF 133 SHEETS

F.A.I. RTE.	SECTION	COUNTY	TOTAL SHEETS	SHEET NO.
270	60-1B-1	MADISON	712	509
		CONTRACT NO. 76A91		
		ILLINOIS FED. AID PROJECT		

Illinois Department of Transportation
Division of Highways
Kaskaskia engineering Group

SOIL BORING LOG

Date 9/28/09

ROUTE I-270 DESCRIPTION Bridge over Chain of Rocks Canal LOGGED BY MDM
SECTION Bridge over Chain of Rocks Canal LOCATION , SEC.30, TWP. 4N, RNG. 9W, PM
COUNTY Madison DRILLING METHOD Hollow Stem Auger HAMMER TYPE Automatic

STRUCT. NO. 060-0345
Station
BORING NO. B-15
Station 1208+17.74
Offset 179.08ft RT
Ground Surface Elev. 428.0 ft

Surface Water Elev. ft
Stream Bed Elev. ft
Groundwater Elev.:
First Encounter 413.9 ft ▼
Upon Completion N/A ft
After ___ Hrs. N/A ft

Description	Elev.	DEPTH (ft)	BLOWS (/6")	UCS Qu (tsf)	MOIST (%)
Gray Fine SAND *(continued)*			2		
Note: SPT samples taken with 300 lb Hammer to 45 feet. Offset to B-15A and redrilled with 140 lb Hammer			3		
		-45	6		
			8		
Gray Fine to Coarse SAND	378.98		13		
		-50	17		
			14		
Gray Fine SAND with Gravel, trace silt Sand=86.2%, Silt/CL=3.5%, Gravel=10.3%	373.98		9		
		-55	8		
			6		
Gray Fine SAND, trace Silt	368.98		12		
		-60	13		
Gray Fine SAND, trace Silt *(continued)*			14		
Gray Fine SAND	358.98		14		
		-70	23		
			25		
Gray Fine SAND, trace Gravel	348.98		6		
		-80	7		

The Unconfined Compressive Strength (UCS) Failure Mode is indicated by (B-Bulge, S-Shear, P-Penetrometer)
The SPT (N value) is the sum of the last two blow values in each sampling zone (AASHTO T206)

BBS, from 137 (Rev. 8-99)

Illinois Department of Transportation
Division of Highways
Kaskaskia engineering Group

SOIL BORING LOG

Date 9/28/09

ROUTE I-270 DESCRIPTION Bridge over Chain of Rocks Canal LOGGED BY MDM
SECTION Bridge over Chain of Rocks Canal LOCATION , SEC.30, TWP. 4N, RNG. 9W, PM
COUNTY Madison DRILLING METHOD Hollow Stem Auger HAMMER TYPE Automatic

STRUCT. NO. 060-0345
Station
BORING NO. B-15
Station 1208+17.74
Offset 179.08ft RT
Ground Surface Elev. 428.0 ft

Surface Water Elev. ft
Stream Bed Elev. ft
Groundwater Elev.:
First Encounter 413.9 ft ▼
Upon Completion N/A ft
After ___ Hrs. N/A ft

Description	Elev.	DEPTH (ft)	BLOWS (/6")	UCS Qu (tsf)	MOIST (%)
Gray Fine SAND, trace Gravel *(continued)*			8		
Gray Fine SAND with Gravel	338.98		11		
		-90	12		
			13		
		-95			
Gray Fine SAND	328.98		13		
		-100	9		
Gray Fine SAND *(continued)*			9		
Gray Fine SAND	318.98		8		
		-110	16		
			20		
SHALEY LIMESTONE	314.48 313.98				
Brown-gray Coarse GRAVEL with coarse Sand		-115			
Gravel/Cobbles					
Brown-gray Coarse GRAVEL with coarse Sand, trace Clay		-120	19		
			32		

The Unconfined Compressive Strength (UCS) Failure Mode is indicated by (B-Bulge, S-Shear, P-Penetrometer)
The SPT (N value) is the sum of the last two blow values in each sampling zone (AASHTO T206)

BBS, from 137 (Rev. 8-99)

Illinois Department of Transportation
Division of Highways
Kaskaskia engineering Group

SOIL BORING LOG

Date 9/28/09

ROUTE I-270 DESCRIPTION Bridge over Chain of Rocks Canal LOGGED BY MDM
SECTION Bridge over Chain of Rocks Canal LOCATION , SEC.30, TWP. 4N, RNG. 9W, PM
COUNTY Madison DRILLING METHOD Hollow Stem Auger HAMMER TYPE Automatic

STRUCT. NO. 060-0345
Station
BORING NO. B-15
Station 1208+17.74
Offset 179.08ft RT
Ground Surface Elev. 428.0 ft

Surface Water Elev. ft
Stream Bed Elev. ft
Groundwater Elev.:
First Encounter 413.9 ft ▼
Upon Completion N/A ft
After ___ Hrs. N/A ft

Description	Elev.	DEPTH (ft)	BLOWS (/6")	UCS Qu (tsf)	MOIST (%)
Brown-gray Coarse GRAVEL with coarse Sand *(continued)*			35		
		-125			
			50/1"		
	297.98	-130			
		-135			
		-140			

The Unconfined Compressive Strength (UCS) Failure Mode is indicated by (B-Bulge, S-Shear, P-Penetrometer)
The SPT (N value) is the sum of the last two blow values in each sampling zone (AASHTO T206)

BBS, from 137 (Rev. 8-99)

c:\pwworking\omo\d0549\04\0600345-76A91-131-SBL.dgn
jmigus

3/15/2011
5:07:41 PM

Kaskaskia Engineering Group, LLC	USER NAME = jmigus	DESIGNED - BWC	REVISED -
	FILE NAME = 0600345-76A91-131-SBL.DGN	CHECKED - LGP	REVISED -
	PLOT SCALE = NONE	DRAWN - JM	REVISED -
	PLOT DATE = 3/18/2011	CHECKED - BSK	REVISED -

STATE OF ILLINOIS
DEPARTMENT OF TRANSPORTATION

SOIL BORING LOGS
STRUCTURE NO. 060-0345
BRIDGE SHEET NO. 131 OF 133 SHEETS

F.A.I. RTE.	SECTION	COUNTY	TOTAL SHEETS	SHEET NO.
270	60-1B-1	MADISON	712	510

CONTRACT NO. 76A91
ILLINOIS FED. AID PROJECT

Illinois Department of Transportation
Division of Highways
Kaskaskia engineering Group

SOIL BORING LOG

Page 1 of 2

Date 9/30/09

ROUTE I-270 DESCRIPTION Bridge over Chain of Rocks Canal LOGGED BY MDM

SECTION Bridge over Chain of Rocks Canal LOCATION , SEC.30, TWP. 4N, RNG. 9W, PM

COUNTY Madison DRILLING METHOD Hollow Stem Auger HAMMER TYPE Automatic

STRUCT. NO. 060-0345
Station

BORING NO. B-15A
Station 1208+17.73
Offset 189.08ft RT
Ground Surface Elev. 426.6 ft

Surface Water Elev. ft
Stream Bed Elev. ft

Groundwater Elev.:
First Encounter 412.6 ft ▼
Upon Completion N/A ft
After ___ Hrs. N/A ft

Description	Elev.	DEPTH (ft)	BLOWS (/6")	UCS Qu (tsf)	MOIST (%)
Brown Fine SAND			2		
			6		
			8		
	422.63				
Brown Fine SAND, trace Coarse Sand			4		
		-5	9		
			12		
			4		
			8		
			12		
			3		
		-10	9		
			13		
			5		
			8		
			8		
		▼	3		
		-15	6		
			8		
			5		
			5		
			3		
	407.63				
Gray SANDY SILT			1		
		-20	1	1.0	34
Gray SANDY SILT *(continued)*			1	P	
	402.63				
Gray SILTY CLAY			1		
		-25	1		36
			1		
	399.63				
Gray-brown Fine SAND			6		
		-30	8		
			10		
	392.63				
Gray-brown Coarse SAND, trace Silt			1		
		-35	3		
			7		
	387.63				
		-40	7		
			11		

The Unconfined Compressive Strength (UCS) Failure Mode is indicated by (B-Bulge, S-Shear, P-Penetrometer)
The SPT (N value) is the sum of the last two blow values in each sampling zone (AASHTO T206)

BBS, from 137 (Rev. 8-99)

Illinois Department of Transportation
Division of Highways
Kaskaskia engineering Group

SOIL BORING LOG

Page 2 of 2

Date 9/30/09

ROUTE I-270 DESCRIPTION Bridge over Chain of Rocks Canal LOGGED BY MDM

SECTION Bridge over Chain of Rocks Canal LOCATION , SEC.30, TWP. 4N, RNG. 9W, PM

COUNTY Madison DRILLING METHOD Hollow Stem Auger HAMMER TYPE Automatic

STRUCT. NO. 060-0345
Station

BORING NO. B-15A
Station 1208+17.73
Offset 189.08ft RT
Ground Surface Elev. 426.6 ft

Surface Water Elev. ft
Stream Bed Elev. ft

Groundwater Elev.:
First Encounter 412.6 ft ▼
Upon Completion N/A ft
After ___ Hrs. N/A ft

Description	Elev.	DEPTH (ft)	BLOWS (/6")	UCS Qu (tsf)	MOIST (%)
Brown Fine SAND with Silt, trace Gravel Sand=86%, Silt/CL=10.7%, Gravel=3.3% *(continued)*			7		
	382.63				
Brown Fine SAND with Silt, Trace Gravel			11		
		-45	15		
	361.13		19		
		-50			
		-55			
		-60			

The Unconfined Compressive Strength (UCS) Failure Mode is indicated by (B-Bulge, S-Shear, P-Penetrometer)
The SPT (N value) is the sum of the last two blow values in each sampling zone (AASHTO T206)

BBS, from 137 (Rev. 8-99)

Illinois Department of Transportation
Division of Highways
Kaskaskia engineering Group

SOIL BORING LOG

Page 1 of 4

Date 10/22/09

ROUTE I-270 DESCRIPTION Bridge over Chain of Rocks Canal LOGGED BY IK

SECTION Bridge over Chain of Rocks Canal LOCATION , SEC.30, TWP. 4N, RNG. 9W, PM

COUNTY Madison DRILLING METHOD Hollow Stem Auger HAMMER TYPE Automatic

STRUCT. NO. 060-0345
Station

BORING NO. B-16
Station 1208+27.37
Offset 255.00ft RT
Ground Surface Elev. 443.6 ft

Surface Water Elev. ft
Stream Bed Elev. ft

Groundwater Elev.:
First Encounter 413.6 ft ▼
Upon Completion N/A ft
After ___ Hrs. N/A ft

Description	Elev.	DEPTH (ft)	BLOWS (/6")	UCS Qu (tsf)	MOIST (%)
TOPSOIL	442.58				
Brown SANDY SILT, trace roots and crushed rock			2		
	441.58		4		21
Brown Fine SAND, trace gravel			5		
			2		
			4		
		-5	6		
	437.58				
Brown Fine SAND, trace gravel and silt			3		
			4		
			5		
			2		
			5		
		-10	5		
	432.58				
Brown Fine SAND with silt			2		
			3		
			4		
	430.08				
Brown Fine SAND with silt, trace gravel			2		
			3		
		-15	3		
	427.58				
Brown medium SAND, trace silt			6		
			14		
			16		
			7		
			12		
		-20	13		
Brown medium SAND, trace silt *(continued)*					
	420.08				
Brown Fine SAND			4		
			8		
		-25	8		
	415.08				
Brown Fine SAND, trace Silt			6		
			8		
		▼ 30	9		
	410.08				
Brown Fine SAND with Silt			5		
			6		
		-35	8		
	405.08				
Gray SANDY SILT			1		
			1		37
		-40	2		

The Unconfined Compressive Strength (UCS) Failure Mode is indicated by (B-Bulge, S-Shear, P-Penetrometer)
The SPT (N value) is the sum of the last two blow values in each sampling zone (AASHTO T206)

BBS, from 137 (Rev. 8-99)

c:\pwworking\oma\d0549104\06003 45-76A91-132-SBL.dgn
jmigus
3/15/2011
7:25:49 PM

Kaskaskia Engineering Group, LLC

USER NAME = jmigus	DESIGNED - BWC	REVISED -	
FILE NAME = 0600345-76A91-132-SBL.DGN	CHECKED - LGP	REVISED -	
PLOT SCALE = NONE	DRAWN - JM	REVISED -	
PLOT DATE = 3/18/2011	CHECKED - BSK	REVISED -	

STATE OF ILLINOIS
DEPARTMENT OF TRANSPORTATION

SOIL BORING LOGS
STRUCTURE NO. 060-0345

BRIDGE SHEET NO. 132 OF 133 SHEETS

F.A.I. RTE.	SECTION	COUNTY	TOTAL SHEETS	SHEET NO.
270	60-1B-1	MADISON	712	511

CONTRACT NO. 76A91

ILLINOIS FED. AID PROJECT

Illinois Department of Transportation
Division of Highways
Kaskaskia engineering Group

SOIL BORING LOG

Date 10/22/09

ROUTE I-270 DESCRIPTION Bridge over Chain of Rocks Canal LOGGED BY IK
SECTION Bridge over Chain of Rocks Canal LOCATION , SEC.30, TWP. 4N, RNG. 9W, PM
COUNTY Madison DRILLING METHOD Hollow Stem Auger HAMMER TYPE Automatic

STRUCT. NO. 060-0345
Station
BORING NO. B-16
Station 1206+27.37
Offset 255.00ft RT
Ground Surface Elev. 443.6 ft

Surface Water Elev. ft
Stream Bed Elev. ft
Groundwater Elev.:
First Encounter 413.6 ft ▼
Upon Completion N/A ft
After ___ Hrs. N/A ft

Description	Elev.	DEPTH (ft)	BLOWS (/6")	UCS Qu (tsf)	MOIST (%)
Gray SANDY SILT *(continued)*					
Gray-Brown SILTY SAND Sand=76.8%, Silt/CL=23.2%, Gravel=0%	400.08		2 5 13		
Gray Medium SAND, trace Gravel	395.08	-45	9 12 15		
Gray Fine SAND, trace Gravel	390.08	-50	9 12 17		
Gray Fine SAND, trace Gravel *(continued)*		-55			
Gray Medium SAND, trace Silt and Gravel Sand=96.6%, Silt/CL=3.2%, Gravel=0.2%		-65	7 11 15		
Gray Fine SAND, trace Gravel	365.08	-70	13 18 19		
		-75			
		-80	16 16 14		

The Unconfined Compressive Strength (UCS) Failure Mode is indicated by (B-Bulge, S-Shear, P-Penetrometer)
The SPT (N value) is the sum of the last two blow values in each sampling zone (AASHTO T206)

BBS, from 137 (Rev. 8-99)

Illinois Department of Transportation
Division of Highways
Kaskaskia engineering Group

SOIL BORING LOG

Date 10/22/09

ROUTE I-270 DESCRIPTION Bridge over Chain of Rocks Canal LOGGED BY IK
SECTION Bridge over Chain of Rocks Canal LOCATION , SEC.30, TWP. 4N, RNG. 9W, PM
COUNTY Madison DRILLING METHOD Hollow Stem Auger HAMMER TYPE Automatic

STRUCT. NO. 060-0345
Station
BORING NO. B-16
Station 1206+27.37
Offset 255.00ft RT
Ground Surface Elev. 443.6 ft

Surface Water Elev. ft
Stream Bed Elev. ft
Groundwater Elev.:
First Encounter 413.6 ft ▼
Upon Completion N/A ft
After ___ Hrs. N/A ft

Description	Elev.	DEPTH (ft)	BLOWS (/6")	UCS Qu (tsf)	MOIST (%)
Gray Fine SAND, trace Gravel *(continued)*					
Gray Fine SAND, trace Silt	355.08	-85	13 19 25		
Gray Medium SAND, trace Gravel	345.08	-90	9 7 8		
Gray Medium SAND, trace Gravel *(continued)*		-100			
Gray SILTY SAND, trace Gravel Sand=61.5%, Silt/CL=37.6%, Gravel=0.9%	335.08	-105	11 14 16		
Gray Medium SAND, trace Gravel	325.08	-110	12 11 12		
		-115			
		-120			

The Unconfined Compressive Strength (UCS) Failure Mode is indicated by (B-Bulge, S-Shear, P-Penetrometer)
The SPT (N value) is the sum of the last two blow values in each sampling zone (AASHTO T206)

BBS, from 137 (Rev. 8-99)

Illinois Department of Transportation
Division of Highways
Kaskaskia engineering Group

SOIL BORING LOG

Date 10/22/09

ROUTE I-270 DESCRIPTION Bridge over Chain of Rocks Canal LOGGED BY IK
SECTION Bridge over Chain of Rocks Canal LOCATION , SEC.30, TWP. 4N, RNG. 9W, PM
COUNTY Madison DRILLING METHOD Hollow Stem Auger HAMMER TYPE Automatic

STRUCT. NO. 060-0345
Station
BORING NO. B-16
Station 1206+27.37
Offset 255.00ft RT
Ground Surface Elev. 443.6 ft

Surface Water Elev. ft
Stream Bed Elev. ft
Groundwater Elev.:
First Encounter 413.6 ft ▼
Upon Completion N/A ft
After ___ Hrs. N/A ft

Description	Elev.	DEPTH (ft)	BLOWS (/6")	UCS Qu (tsf)	MOIST (%)
Gray Medium SAND, trace Gravel *(continued)*					
Gray Medium SAND, trace Gravel		-125	9 9 8		
Gray SANDY SILT, trace Gravel	309.28	-130	14 19 20	44	
Gray SANDY SILT, trace Gravel *(continued)*		-135			
	299.08	-140			
		-145			
		-150			
		-155			
		-160			

The Unconfined Compressive Strength (UCS) Failure Mode is indicated by (B-Bulge, S-Shear, P-Penetrometer)
The SPT (N value) is the sum of the last two blow values in each sampling zone (AASHTO T206)

BBS, from 137 (Rev. 8-99)

c:\pwworking\omo\d0549104\0600345-76A91-132A-SBL.dgn
jmlgus
3/15/2011
7:25:56 PM

Kaskaskia Engineering Group, LLC	USER NAME = jmlgus	DESIGNED - BWC	REVISED -
	FILE NAME = 0600345-76A91-132A-SBL.DGN	CHECKED - LGP	REVISED -
	PLOT SCALE = NONE	DRAWN - JM	REVISED -
	PLOT DATE = 3/18/2011	CHECKED - BSK	REVISED -

STATE OF ILLINOIS
DEPARTMENT OF TRANSPORTATION

SOIL BORING LOGS
STRUCTURE NO. 060-0345

BRIDGE SHEET NO. 132A OF 133 SHEETS

F.A.I. RTE.	SECTION	COUNTY	TOTAL SHEETS	SHEET NO.
270	60-1B-1	MADISON	712	511A

CONTRACT NO. 76A91

ILLINOIS FED. AID PROJECT

Illinois Department of Transportation
Division of Highways

SOIL BORING LOG

Page 1 of 3

Date 7/7/10

ROUTE I-270 DESCRIPTION Bridge over Chain of Rocks Canal LOGGED BY ASC

SECTION 60-1B-1 LOCATION , SEC.30, TWP. 4N, RNG. 9W, PM

COUNTY Madison DRILLING METHOD HSA/Casing HAMMER TYPE Automatic

STRUCT. NO. 060-0345
Station

BORING NO. B-17
Station 1198+96.13
Offset 26.72ft LT
Ground Surface Elev. 400.5 ft

Surface Water Elev. 417.4 ft
Stream Bed Elev. ft

Groundwater Elev.:
First Encounter ft
Upon Completion N/A ft
After N/A Hrs. N/A ft

Description	Elev.	DEPTH (ft)	BLOWS (/6")	UCS Qu (tsf)	MOIST (%)
Large Rocks, Rip Rap					
	398.53				
Brown Fine to Medium SAND, with Silt			1		
			1		
			2		
	397.03				
Brown SANDY SILT			2		
			2		
		-5	2		
	394.53				
Brown Fine to Coarse SAND, Trace Gravel			1		
			4		
			6		
	392.03				
Brown Fine to Medium SAND, Trace Silt			2		
			3		
		-10	7		
	389.53				
Gray-brown Fine to Medium SAND, with Silt			2		
			2		
			4		
	387.03				
Gray Fine to Medium SAND, Trace Silt			2		
			4		
		-15	5		
	384.53				
Brown Fine to Coarse SAND, Trace Silt			3		
			6		
			7		
Sand=98.3%, Silt/CL=1.7%, Gravel=0.0%			4		
			7		
		-20	10		
Brown Fine to Coarse SAND, Trace Silt *(continued)*	379.53				
Gray-brown Fine to Medium SAND, Trace Silt			5		
			9		
			7		
	377.03				
Gray SILTY SAND			2		
			2		
		-25	7		
	374.53				
Gray Fine to Medium SAND, Trace Silt			8		
			12		
			11		
	372.03				
Gray Fine to Medium SAND, Trace Silt, Gravel			6		
			9		
		-30	14		
	367.03				
Gray Fine to Medium SAND, with Silt			9		
			11		
		-35	12		
	362.03				
Gray CLAYEY SAND			9		
			9		
		-40	16		

The Unconfined Compressive Strength (UCS) Failure Mode is indicated by (B-Bulge, S-Shear, P-Penetrometer)
The SPT (N value) is the sum of the last two blow values in each sampling zone (AASHTO T206)

BBS, from 137 (Rev. 8-99)

Illinois Department of Transportation
Division of Highways

SOIL BORING LOG

Page 2 of 3

Date 7/7/10

ROUTE I-270 DESCRIPTION Bridge over Chain of Rocks Canal LOGGED BY ASC

SECTION 60-1B-1 LOCATION , SEC.30, TWP. 4N, RNG. 9W, PM

COUNTY Madison DRILLING METHOD HSA/Casing HAMMER TYPE Automatic

STRUCT. NO. 060-0345
Station

BORING NO. B-17
Station 1198+96.13
Offset 26.72ft LT
Ground Surface Elev. 400.5 ft

Surface Water Elev. 417.4 ft
Stream Bed Elev. ft

Groundwater Elev.:
First Encounter ft
Upon Completion N/A ft
After N/A Hrs. N/A ft

Description	Elev.	DEPTH (ft)	BLOWS (/6")	UCS Qu (tsf)	MOIST (%)
Gray CLAYEY SAND *(continued)*					
	357.03				
Gray Fine to Coarse SAND, Trace Silt, Gravel			8		
			9		
		-45	9		
	352.03				
Gray Fine to Coarse SAND, with Silt, Trace Gravel			8		
			9		
		-50	9		
		-55			
	342.03				
Gray-brown Fine to Coarse SAND, with Silt, Gravel			14		
			11		
		-60	9		
Gray-brown Fine to Coarse SAND, with Silt, Gravel *(continued)*					
		-65			
	332.03				
Gray-brown Fine to Medium SAND, with Gravel, Trace Silt			14		
			33		
		-70	43		
		-75			
	322.03				
Brown Fine to Medium SAND, Trace Silt and Gravel			2		
			3		
		-80	8		

The Unconfined Compressive Strength (UCS) Failure Mode is indicated by (B-Bulge, S-Shear, P-Penetrometer)
The SPT (N value) is the sum of the last two blow values in each sampling zone (AASHTO T206)

BBS, from 137 (Rev. 8-99)

Illinois Department of Transportation
Division of Highways

SOIL BORING LOG

Page 3 of 3

Date 7/7/10

ROUTE I-270 DESCRIPTION Bridge over Chain of Rocks Canal LOGGED BY ASC

SECTION 60-1B-1 LOCATION , SEC.30, TWP. 4N, RNG. 9W, PM

COUNTY Madison DRILLING METHOD HSA/Casing HAMMER TYPE Automatic

STRUCT. NO. 060-0345
Station

BORING NO. B-17
Station 1198+96.13
Offset 26.72ft LT
Ground Surface Elev. 400.5 ft

Surface Water Elev. 417.4 ft
Stream Bed Elev. ft

Groundwater Elev.:
First Encounter ft
Upon Completion N/A ft
After N/A Hrs. N/A ft

Description	Elev.	DEPTH (ft)	BLOWS (/6")	UCS Qu (tsf)	MOIST (%)
Brown Fine to Medium SAND, Trace Silt and Gravel *(continued)*					
		-85			
	312.03				
Brown Fine to Medium SAND, Trace Silt			13		
			20		
		-90	24		
		-95			
	302.03				
Gray SILTY SAND, with Gravel			17		
			22		
Borehole continued with rock coring		-100	50/2"		

The Unconfined Compressive Strength (UCS) Failure Mode is indicated by (B-Bulge, S-Shear, P-Penetrometer)
The SPT (N value) is the sum of the last two blow values in each sampling zone (AASHTO T206)

BBS, from 137 (Rev. 8-99)

c:\pwworking\oma\d0549\04\0600345-76A91-132B-SBL.dgn
jmigus

3/15/2011
7:26:03 PM

Kaskaskia Engineering Group, LLC

USER NAME = jmigus	DESIGNED - BWC	REVISED -
FILE NAME = 0600345-76A91-132B-SBL.DGN	CHECKED - LGP	REVISED -
PLOT SCALE = NONE	DRAWN - JM	REVISED -
PLOT DATE = 3/18/2011	CHECKED - BSK	REVISED -

STATE OF ILLINOIS
DEPARTMENT OF TRANSPORTATION

SOIL BORING LOGS
STRUCTURE NO. 060-0345

BRIDGE SHEET NO. 132B OF 133 SHEETS

F.A.I. RTE.	SECTION	COUNTY	TOTAL SHEETS	SHEET NO.
270	60-1B-1	MADISON	712	511B

CONTRACT NO. 76A91

ILLINOIS FED. AID PROJECT

Illinois Department of Transportation
Division of Highways

ROCK CORE LOG

Page 1 of 2

Date 7/7/10

ROUTE I-270 DESCRIPTION Bridge over Chain of Rocks Canal LOGGED BY ASC

SECTION 60-1B-1 LOCATION , SEC.30, TWP. 4N, RNG. 9W, PM

COUNTY Madison CORING METHOD Core Barrel

STRUCT. NO. 060-0345
Station

CORING BARREL TYPE & SIZE NX Wireline
Core Diameter 1.9 in
Top of Rock Elev. 300.33 ft
Begin Core Elev. 300.33 ft

BORING NO. B-17
Station 1198+96.13
Offset 26.72ft LT
Ground Surface Elev. 400.5 ft

	DEPTH (ft)	CORE (#)	RECOVERY (%)	R.Q.D. (%)	CORE TIME (min/ft)	STRENGTH (tsf)
LIMESTONE: Light gray, Finely Crystalline, Trace seams, Massive bedded		1	100	92	17.5	
	299.23					
LIMESTONE: Light gray, Finely Crystalline, Trace seams and veins, Massive bedded		2	99	81	5.5	
	298.38					
Gray-blue SILTSTONE, Thin Bedded	298.28					
LIMESTONE: Light gray, Finely Crystalline, Trace seams, Massive bedded						
	-105					
	294.63					
LIMESTONE: Light gray, Finely Crystalline, Massive bedded		3	95	84	3.5	
	-110					
	289.63					
LIMESTONE: Light gray, Finely Crystalline, Trace seams, Massive bedded		4	96	91	5.2	
	-115					
	284.63					
LIMESTONE: Light gray, Finely Crystalline, Trace seams, Massive bedded		5	98	98	4.2	
CORE Run 5 -- RMR Rating 80: II - Good Quality Rock Mass						820.8
	-120					

Color pictures of the cores Yes
Cores will be stored for examination until 2013
The "Strength" column represents the uniaxial compressive strength of the core sample (ASTM D-2938)

BBS, form 138 (Rev. 8-99)

Illinois Department of Transportation
Division of Highways

ROCK CORE LOG

Page 2 of 2

Date 7/7/10

ROUTE I-270 DESCRIPTION Bridge over Chain of Rocks Canal LOGGED BY ASC

SECTION 60-1B-1 LOCATION , SEC.30, TWP. 4N, RNG. 9W, PM

COUNTY Madison CORING METHOD Core Barrel

STRUCT. NO. 060-0345
Station

CORING BARREL TYPE & SIZE NX Wireline
Core Diameter 1.9 in
Top of Rock Elev. 300.33 ft
Begin Core Elev. 300.33 ft

BORING NO. B-17
Station 1198+96.13
Offset 26.72ft LT
Ground Surface Elev. 400.5 ft

	DEPTH (ft)	CORE (#)	RECOVERY (%)	R.Q.D. (%)	CORE TIME (min/ft)	STRENGTH (tsf)
	279.63					
LIMESTONE: Light gray, Finely Crystalline, Trace seams, Massive bedded	279.20	6	98	98	4.6	
LIMESTONE: Gray, Finely Crystalline, with seams, Thick bedded						
	277.53					
LIMESTONE: Light gray, Finely Crystalline, Trace seams, Massive bedded						
	-125					
	274.63					
		7	94	94	6.6	
	-130					
CORE Run 7 -- RMR Rating 80: II - Good Quality Rock Mass						635.8
CHERTY LIMESTONE: Gray, Finely Crystalline, Thin bedded	269.63					
LIMESTONE: Light gray, Finely Crystalline, Trace seams, Massive bedded						
	-135					
	-140					

Color pictures of the cores Yes
Cores will be stored for examination until 2013
The "Strength" column represents the uniaxial compressive strength of the core sample (ASTM D-2938)

BBS, form 138 (Rev. 8-99)

Illinois Department of Transportation
Division of Highways

SOIL BORING LOG

Page 1 of 2

Date 7/14/10

ROUTE I-270 DESCRIPTION Bridge over Chain of Rocks Canal LOGGED BY ASC

SECTION 60-1B-1 LOCATION , SEC.30, TWP. 4N, RNG. 9W, PM

COUNTY Madison DRILLING METHOD HSA/Casing HAMMER TYPE Automatic

STRUCT. NO. 060-0345
Station

BORING NO. B-18
Station 1203+85.45
Offset 29.59ft LT
Ground Surface Elev. 394.5 ft

Surface Water Elev. 419.4 ft
Stream Bed Elev. ft

Groundwater Elev.:
First Encounter ft
Upon Completion N/A ft
After N/A Hrs. N/A ft

	DEPTH (ft)	BLOWS (/6")	UCS Qu (tsf)	MOIST (%)
Large Rocks, Rip Rap				
	391.00			
Gray-brown SILTY SAND, Trace Gravel		3		
		2		
	-5	1		
		6		
		3		
		5		
	386.00			
Brown Fine to Coarse SAND, Trace Silt, Gravel		2		
		3		
	-10	4		
	383.50			
Gray Fine to Coarse SAND, Trace Silt		1		
		1		
		2		
	381.00			
Gray Fine to Medium SAND, Trace Silt		3		
		4		
	-15	7		
		4		
		6		
		8		
		5		
		9		
	-20	10		

	DEPTH (ft)	BLOWS (/6")	UCS Qu (tsf)	MOIST (%)
Gray Fine to Medium SAND, Trace Silt *(continued)*				
		6		
		14		
		18		
	371.00			
Gray-brown Fine to Medium SAND, Trace Silt		4		
		7		
	-25	8		
	368.50			
Gray Fine SAND, Trace Silt		3		
		5		
		6		
	366.00			
Gray Fine to Coarse SAND, with Gravel, Trace Silt Sand=88.9%, Silt/CL=2.6%, Gravel=8.5%		6		
		10		
	-30	10		
	-35	11		
	356.00			
Gray Fine to Medium SAND, Trace Silt, Gravel		9		
		16		
	-40	20		

The Unconfined Compressive Strength (UCS) Failure Mode is indicated by (B-Bulge, S-Shear, P-Penetrometer)
The SPT (N value) is the sum of the last two blow values in each sampling zone (AASHTO T206)

BBS, from 137 (Rev. 8-99)

c:\pwworking\oma\d0549\04\0600345-76A91-132C-SBL.dgn
jmigus
3/15/2011
12:26:10 PM

Kaskaskia Engineering Group, LLC

USER NAME = jmigus	DESIGNED - BWC	REVISED -	
FILE NAME = 0600345-76A91-132C-SBL.DGN	CHECKED - LGP	REVISED -	
PLOT SCALE = NONE	DRAWN - JM	REVISED -	
PLOT DATE = 3/18/2011	CHECKED - BSK	REVISED -	

STATE OF ILLINOIS
DEPARTMENT OF TRANSPORTATION

SOIL BORING LOGS
STRUCTURE NO. 060-0345

BRIDGE SHEET NO. 132C OF 133 SHEETS

F.A.I. RTE.	SECTION	COUNTY	TOTAL SHEETS	SHEET NO.
270	60-1B-1	MADISON	712	511C
		CONTRACT NO. 76A91		
		ILLINOIS FED. AID PROJECT		

Illinois Department of Transportation
Division of Highways

SOIL BORING LOG

Page 2 of 2

Date 7/14/10

ROUTE I-270 DESCRIPTION Bridge over Chain of Rocks Canal LOGGED BY ASC

SECTION 60-1B-1 LOCATION , SEC.30, TWP. 4N, RNG. 9W, PM

COUNTY Madison DRILLING METHOD HSA/Casing HAMMER TYPE Automatic

STRUCT. NO. 060-0345
Station

BORING NO. B-18
Station 1203+85.45
Offset 29.59ft LT
Ground Surface Elev. 394.5 ft

Surface Water Elev. 419.4 ft
Stream Bed Elev. ft

Groundwater Elev.:
First Encounter ft
Upon Completion N/A ft
After N/A Hrs. N/A ft

Description	Elev.	DEPTH (ft)	BLOWS (/6")	UCS Qu (tsf)	MOIST (%)
Gray Fine to Medium SAND, Trace Silt, Gravel *(continued)*	351.00				
Gray Fine to Coarse SAND, Trace Silt			7		
		-45	9		
			10		
	346.00				
Gray Medium SAND, Trace Gravel			5		
			5		
		-50	5		
		-55			
	336.00				
Gray-brown Fine to Medium SAND, Trace Gravel			7		
			10		
		-60	13		
Gray-brown Fine to Medium SAND, Trace Gravel *(continued)*					
		-65			
	326.00				
Gray-brown Medium to Coarse SAND, Trace Silt, Gravel			15		
			15		
		-70	16		
Boring Terminated Due to Casing Failure	324.50				
		-75			
		-80			

The Unconfined Compressive Strength (UCS) Failure Mode is indicated by (B-Bulge, S-Shear, P-Penetrometer)
The SPT (N value) is the sum of the last two blow values in each sampling zone (AASHTO T206)

BBS, from 137 (Rev. 8-99)

Illinois Department of Transportation
Division of Highways

SOIL BORING LOG

Page 1 of 3

Date 7/16/10

ROUTE I-270 DESCRIPTION Bridge over Chain of Rocks Canal LOGGED BY ASC

SECTION 60-1B-1 LOCATION , SEC.30, TWP. 4N, RNG. 9W, PM

COUNTY Madison DRILLING METHOD HSA/Casing HAMMER TYPE Automatic

STRUCT. NO. 060-0345
Station

BORING NO. B-18A
Station 1203+86.65
Offset 48.96ft LT
Ground Surface Elev. 392.6 ft

Surface Water Elev. 417.5 ft
Stream Bed Elev. ft

Groundwater Elev.:
First Encounter ft
Upon Completion N/A ft
After N/A Hrs. N/A ft

Description	DEPTH (ft)	BLOWS (/6")	UCS Qu (tsf)	MOIST (%)
Casing advanced to Elevation 314.1 prior to SPT sampling.				
	-5			
	-10			
	-15			
	-20			
Casing advanced to Elevation 314.1 prior to SPT sampling. *(continued)*				
	-25			
	-30			
	-35			
	-40			

The Unconfined Compressive Strength (UCS) Failure Mode is indicated by (B-Bulge, S-Shear, P-Penetrometer)
The SPT (N value) is the sum of the last two blow values in each sampling zone (AASHTO T206)

BBS, from 137 (Rev. 8-99)

Illinois Department of Transportation
Division of Highways

SOIL BORING LOG

Page 2 of 3

Date 7/16/10

ROUTE I-270 DESCRIPTION Bridge over Chain of Rocks Canal LOGGED BY ASC

SECTION 60-1B-1 LOCATION , SEC.30, TWP. 4N, RNG. 9W, PM

COUNTY Madison DRILLING METHOD HSA/Casing HAMMER TYPE Automatic

STRUCT. NO. 060-0345
Station

BORING NO. B-18A
Station 1203+86.65
Offset 48.96ft LT
Ground Surface Elev. 392.6 ft

Surface Water Elev. 417.5 ft
Stream Bed Elev. ft

Groundwater Elev.:
First Encounter ft
Upon Completion N/A ft
After N/A Hrs. N/A ft

Description	DEPTH (ft)	BLOWS (/6")	UCS Qu (tsf)	MOIST (%)
Casing advanced to Elevation 314.1 prior to SPT sampling. *(continued)*				
	-45			
	-50			
	-55			
	-60			
Casing advanced to Elevation 314.1 prior to SPT sampling. *(continued)*				
	-65			
	-70			
	-75			
	314.60			
Gray-brown Fine to Medium SAND, with weathered rock			17	
			32	
	-80		18	

The Unconfined Compressive Strength (UCS) Failure Mode is indicated by (B-Bulge, S-Shear, P-Penetrometer)
The SPT (N value) is the sum of the last two blow values in each sampling zone (AASHTO T206)

BBS, from 137 (Rev. 8-99)

c:\pwworking\oma\d0549\04\0600345-76A91-132D-SBL.dgn
jmigus
3/15/2011
1:26:17 PM

Kaskaskia Engineering Group, LLC

USER NAME = jmigus	DESIGNED - BWC	REVISED -	
FILE NAME = 0600345-76A91-132D-SBL.DGN	CHECKED - LGP	REVISED -	
PLOT SCALE = NONE	DRAWN - JM	REVISED -	
PLOT DATE = 3/18/2011	CHECKED - BSK	REVISED -	

STATE OF ILLINOIS
DEPARTMENT OF TRANSPORTATION

SOIL BORING LOGS
STRUCTURE NO. 060-0345

BRIDGE SHEET NO. 132D OF 133 SHEETS

F.A.I. RTE.	SECTION	COUNTY	TOTAL SHEETS	SHEET NO.
270	60-1B-1	MADISON	712	511D

CONTRACT NO. 76A91

ILLINOIS FED. AID PROJECT

Illinois Department of Transportation
Division of Highways

SOIL BORING LOG

Date 7/16/10

ROUTE I-270 DESCRIPTION Bridge over Chain of Rocks Canal LOGGED BY ASC

SECTION 60-1B-1 LOCATION , SEC.30, TWP. 4N, RNG. 9W, PM

COUNTY Madison DRILLING METHOD HSA/Casing HAMMER TYPE Automatic

STRUCT. NO. 060-0345
Station

BORING NO. B-18A
Station 1203+86.65
Offset 48.96ft LT
Ground Surface Elev. 392.6 ft

Surface Water Elev. 417.5 ft
Stream Bed Elev. ft

Groundwater Elev.:
First Encounter ft
Upon Completion N/A ft
After N/A Hrs. N/A ft

Description	Elev.	DEPTH (ft)	BLOWS (/6")	UCS Qu (tsf)	MOIST (%)
Gray-brown Fine to Medium SAND, with weathered rock *(continued)*		-85			
		-90			
Gray CLAYEY SAND, with Gravel	301.10		10		
			20		
			12		
Borehole continued with rock coring	297.60	-95			
		-100			

The Unconfined Compressive Strength (UCS) Failure Mode is indicated by (B-Bulge, S-Shear, P-Penetrometer)
The SPT (N value) is the sum of the last two blow values in each sampling zone (AASHTO T206)

BBS, from 137 (Rev. 8-99)

Illinois Department of Transportation
Division of Highways

ROCK CORE LOG

Date 7/16/10

ROUTE I-270 DESCRIPTION Bridge over Chain of Rocks Canal LOGGED BY ASC

SECTION 60-1B-1 LOCATION , SEC.30, TWP. 4N, RNG. 9W, PM

COUNTY Madison CORING METHOD Core Barrel

STRUCT. NO. 060-0345
Station

CORING BARREL TYPE & SIZE NX Wireline
Core Diameter 1.9 in
Top of Rock Elev. 297.60 ft
Begin Core Elev. 297.60 ft

BORING NO. B-18A
Station 1203+86.65
Offset 48.96ft LT
Ground Surface Elev. 392.6 ft

Description	Elev.	DEPTH (ft)	CORE (#)	RECOVERY (%)	R.Q.D. (%)	CORE TIME (min/ft)	STRENGTH (tsf)
LIMESTONE: Light gray, Finely Crystalline, Trace seams, Massive bedded	297.60		1	81	76	6	
LIMESTONE: Light gray, Finely Crystalline, with Siltstone, Banded	295.85						
	292.80	-100					
LIMESTONE: Light gray, Finely Crystalline, Trace seams, Massive bedded			2	83	60	8.4	
LIMESTONE: Light gray, Finely Crystalline, Massive bedded	292.00		3	98	98	4.7	
		-105					
	287.10		4	94	87	4.3	
CORE Run 4 -- RMR Rating 77: II - Good Quality Rock Mass							966.2
CHERTY LIMESTONE: Gray, finely Crystalline, Interbedded Siltstone, Thin bedded							
LIMESTONE: Light gray, Finely Crystalline, Trace seams, Massive bedded		-110					
			5	100	92	3.1	
		-115					

Color pictures of the cores Yes
Cores will be stored for examination until 2013
The "Strength" column represents the uniaxial compressive strength of the core sample (ASTM D-2938)

BBS, form 138 (Rev. 8-99)

Illinois Department of Transportation
Division of Highways

ROCK CORE LOG

Date 7/16/10

ROUTE I-270 DESCRIPTION Bridge over Chain of Rocks Canal LOGGED BY ASC

SECTION 60-1B-1 LOCATION , SEC.30, TWP. 4N, RNG. 9W, PM

COUNTY Madison CORING METHOD Core Barrel

STRUCT. NO. 060-0345
Station

CORING BARREL TYPE & SIZE NX Wireline
Core Diameter 1.9 in
Top of Rock Elev. 297.60 ft
Begin Core Elev. 297.60 ft

BORING NO. B-18A
Station 1203+86.65
Offset 48.96ft LT
Ground Surface Elev. 392.6 ft

Description	Elev.	DEPTH (ft)	CORE (#)	RECOVERY (%)	R.Q.D. (%)	CORE TIME (min/ft)	STRENGTH (tsf)
LIMESTONE: Light gray, Finely Crystalline, Massive bedded			6	97	84	4.7	
		-120					
LIMESTONE: Gray, Finely Crystalline, with seams, Thick bedded			7	99	99	4.1	
CORE Run 7 -- RMR Rating 80: II - Good Quality Rock Mass							846.0
	267.60	-125					
		-130					
		-135					

Color pictures of the cores Yes
Cores will be stored for examination until 2013
The "Strength" column represents the uniaxial compressive strength of the core sample (ASTM D-2938)

BBS, form 138 (Rev. 8-99)

c:\pwworking\oma\d0549104\0600345-76A91-133-SBL.dgn
jmlgus

3/15/2011
5:08:11 PM

Kaskaskia Engineering Group, LLC

USER NAME = jmlgus	DESIGNED - BWC	REVISED -	
FILE NAME = 0600345-76A91-133-SBL.DGN	CHECKED - LGP	REVISED -	
PLOT SCALE = NONE	DRAWN - JM	REVISED -	
PLOT DATE = 3/18/2011	CHECKED - BSK	REVISED -	

STATE OF ILLINOIS
DEPARTMENT OF TRANSPORTATION

SOIL BORING LOGS
STRUCTURE NO. 060-0345

BRIDGE SHEET NO. 133 OF 133 SHEETS

F.A.I. RTE.	SECTION	COUNTY	TOTAL SHEETS	SHEET NO.
270	60-1B-1	MADISON	712	512

CONTRACT NO. 76A91

ILLINOIS FED. AID PROJECT

Bench Mark: BM 270-11 - Cut square on the center of the pier base for EB I270 bridge, just east of the east bank of the Chain of Rocks Canal, Elev. 429.361; BM 270-20 - Cut square at SE corner of the pier base for WB I270 bridge over Chain of Rocks Canal, west side of Waterworks Rd (marked BM9), Elev. 443.974.

Existing Structures: None.

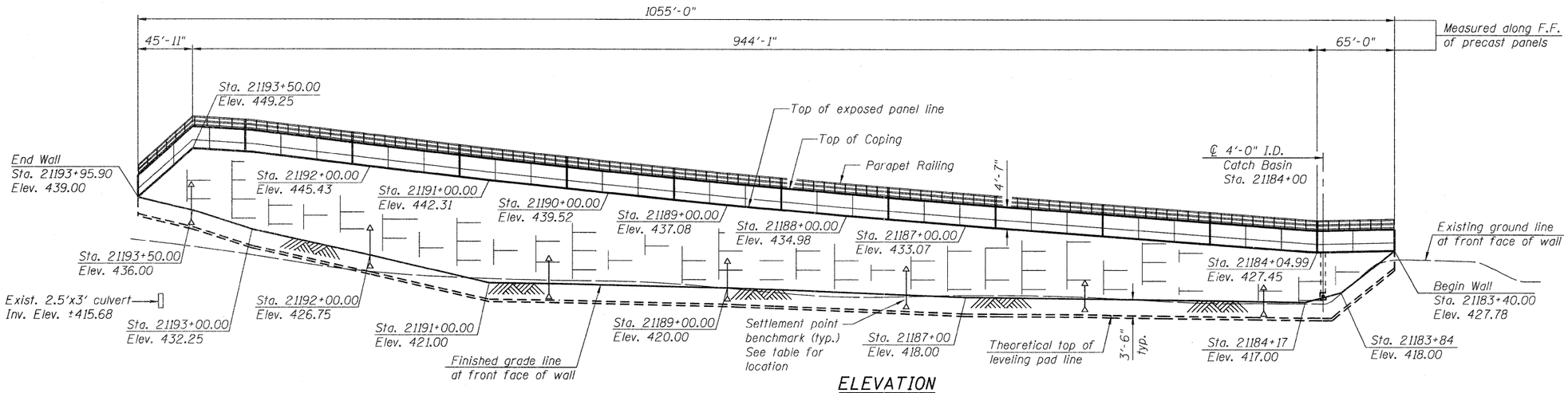

ELEVATION

(Looking @ F.F. of wall)

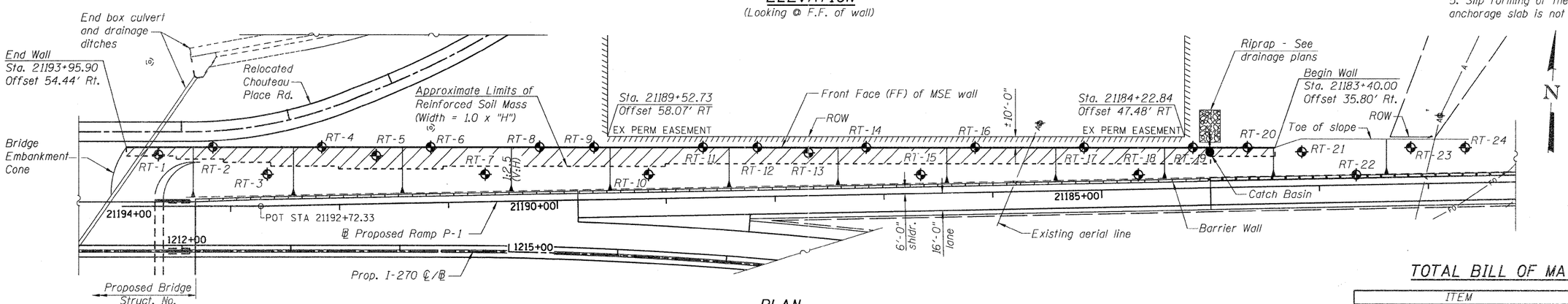

PLAN

Note:
Wall offsets are measured from the ℄ Ramp P-1 to the front face of precast panels.

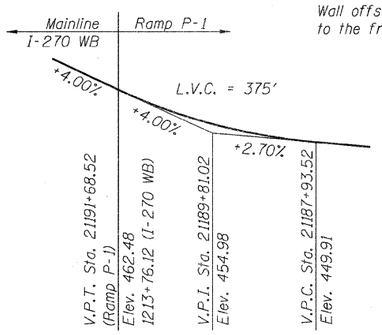

PROFILE GRADE

(along Prop. Ramp P-1 ℄/P.G.L.)

DESIGN SPECIFICATIONS

2002 AASHTO Standard Specifications for Highway Bridges

DESIGN STRESSES

FIELD UNITS

f'c = 3,500 psi
fy = 60,000 psi (Reinforcement)

PRECAST UNITS

f'c = 4,500 psi (Precast Panels)

Type	Station	Offset (RT)
Benchmark	21184+50	38'
Benchmark	21186+00	41'
Benchmark	21187+50	44'
Benchmark	21189+00	47'
Benchmark	21190+50	50'
Benchmark	21192+00	53'
Benchmark	21193+50	56'

SETTLEMENT POINT BENCHMARKS

(See Sheet 5 for additional Benchmark information)

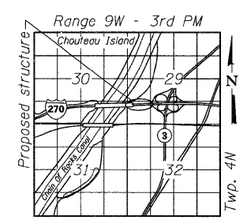

LOCATION SKETCH

APPROVED
FOR STRUCTURAL ADEQUACY ONLY
ENGINEER OF BRIDGES AND STRUCTURES

LICENSED STRUCTURAL ENGINEER
GERALD E. KOYLASS
081-005264
MY COMMISSION EXPIRES NOVEMBER 30, 2012
Sep. 11, 2012

INDEX OF SHEETS

GENERAL NOTES

1. Reinforcement bars shall conform to the requirements of ASTM A 706 Gr 60. See Special Provisions.
2. Reinforcement bars designated (E) shall be epoxy coated.
3. Maximum applied bearing pressure = 6,600 psf.
4. The MSE wall supplier's internal stability design shall account for the anchorage slab's bearing pressure surcharge of 1.0 ksf and horizontal sliding force of 0.5 kips/ft. of wall.
5. Slip forming of the parapet and anchorage slab is not allowed.

TOTAL BILL OF MATERIAL

ITEM	UNIT	TOTAL
Structure Excavation	Cu Yd	3,520
Concrete Structures	Cu Yd	686.1
Reinforcement Bars, Epoxy Coated	Pound	63,620
Parapet Railing	Foot	1,060
Mechanically Stabilized Earth Retaining Wall	Sq Ft	19,560

GENERAL PLAN AND ELEVATION
I-270 OVER CHAIN OF ROCKS CANAL
F.A.I. RTE. 270 - SEC. 60-1B-1
MADISON COUNTY
STATION 21183+40.00 TO 21193+95.90
STRUCTURE NO. 060-W008

McDonough Associates Inc.
Engineers / Architects
130 East Randolph Street Chicago, Illinois 60601

FILE NAME = 060W008-76A91-001-GPE.dgn	USER NAME = jehrhart	DESIGNED - JCE	REVISED - 4/20/11
		CHECKED - PMH	REVISED -
	PLOT SCALE = 1:50	DRAWN - JCE	REVISED -
	PLOT DATE = 4/20/11	CHECKED - PMH	REVISED -

STATE OF ILLINOIS
DEPARTMENT OF TRANSPORTATION

SHEET NO. 1 OF 19 SHEETS

F.A.I. RTE.	SECTION	COUNTY	TOTAL SHEETS	SHEET NO.
270	60-1B-1	MADISON	712	513
		CONTRACT NO. 76A91		
		ILLINOIS FED. AID PROJECT		

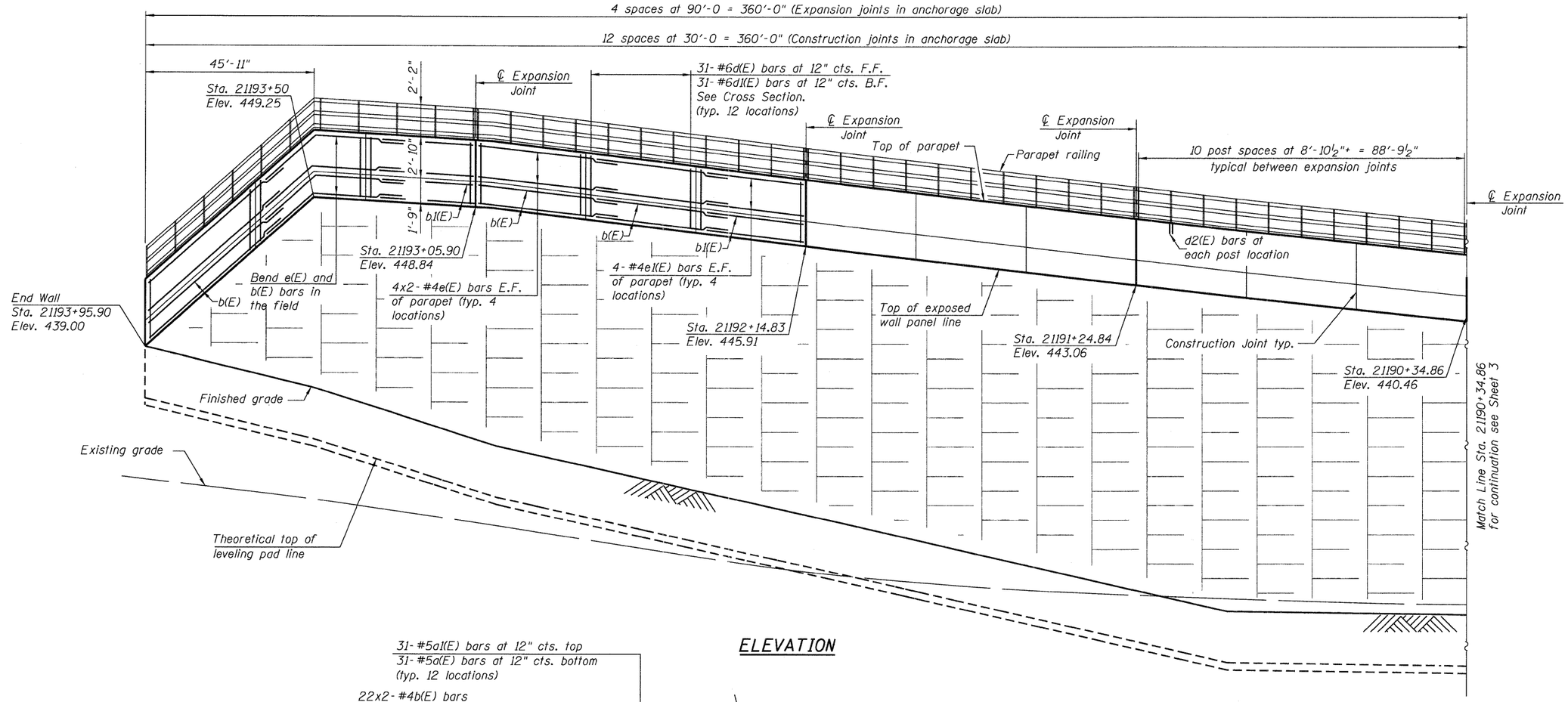

ELEVATION

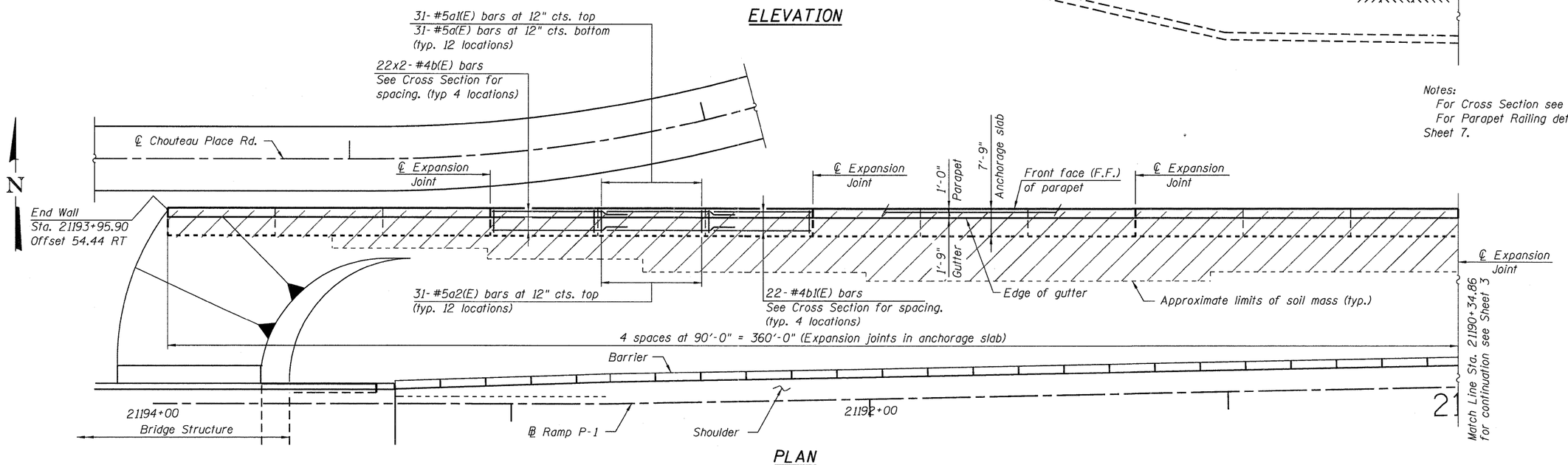

Notes:
For Cross Section see Sheet 5.
For Parapet Railing details see Sheet 7.

PLAN

McDonough Associates Inc.
Engineers / Architects
130 East Randolph Street Chicago, Illinois 60601

FILE NAME = 060W008-76A91-002-Detail_plan.dgn	USER NAME = jehrhart	DESIGNED - JCE	REVISED -	STATE OF ILLINOIS DEPARTMENT OF TRANSPORTATION	MSE WALL – PLAN AND ELEVATION STRUCTURE NO. 060–W008	F.A.I. RTE. 270	SECTION 60-1B-1	COUNTY MADISON	TOTAL SHEETS 712 / SHEET NO. 514
		CHECKED - PMH	REVISED -					CONTRACT NO. 76A91	
	PLOT SCALE = 1:15.36	DRAWN - AMV	REVISED -						
	PLOT DATE = 3/18/11	CHECKED - JCE	REVISED -		SHEET NO. 2 OF 19 SHEETS			ILLINOIS FED. AID PROJECT	

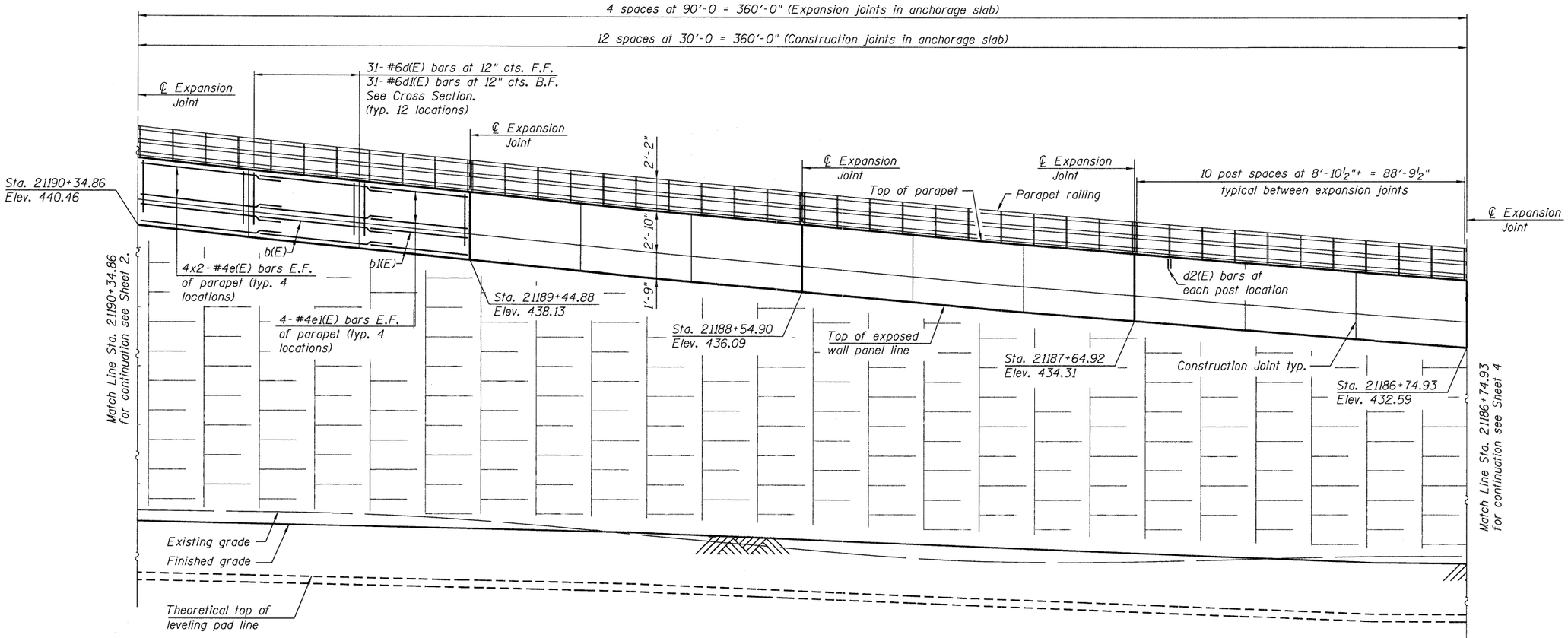

ELEVATION

Notes:
For Cross Section see Sheet 5.
For Parapet Railing details see Sheet 7.

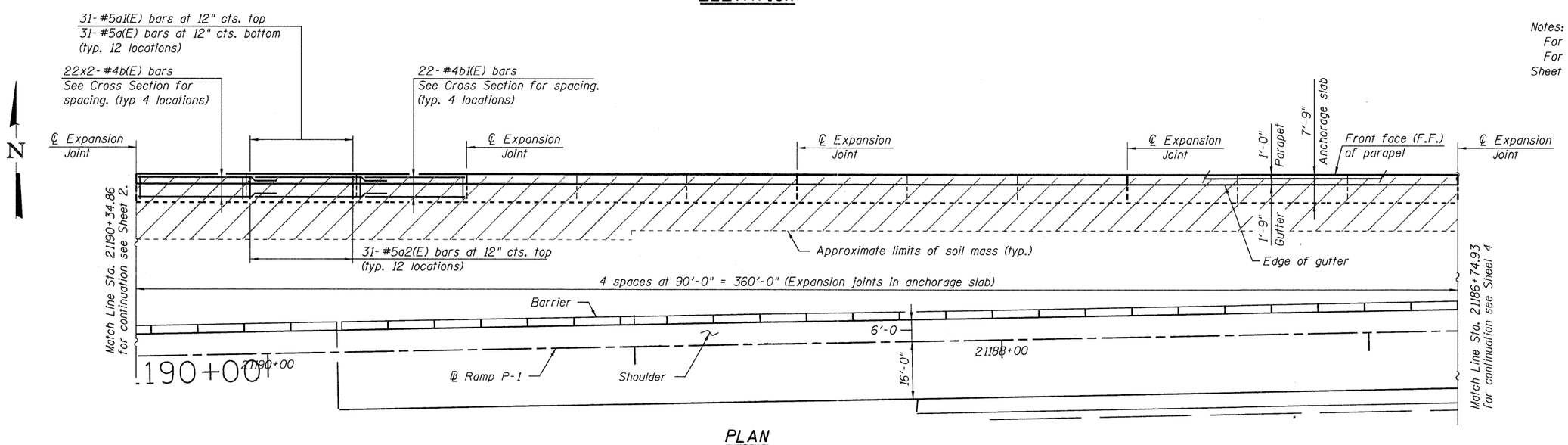

PLAN

McDonough Associates Inc.
Engineers / Architects
130 East Randolph Street Chicago, Illinois 60601

FILE NAME = 060W008-76A91-003-Detail_plan.dgn	USER NAME = jehrhart	DESIGNED - JCE	REVISED -	STATE OF ILLINOIS DEPARTMENT OF TRANSPORTATION	MSE WALL – PLAN AND ELEVATION STRUCTURE NO. 060–W008	F.A.I. RTE.	SECTION	COUNTY	TOTAL SHEETS / SHEET NO.
		CHECKED - PMH	REVISED -			270	60-1B-1	MADISON	712 / 515
	PLOT SCALE = 1:15.36	DRAWN - AMV	REVISED -					CONTRACT NO. 76A91	
	PLOT DATE = 3/18/11	CHECKED - JCE	REVISED -		SHEET NO. 3 OF 19 SHEETS			ILLINOIS FED. AID PROJECT	

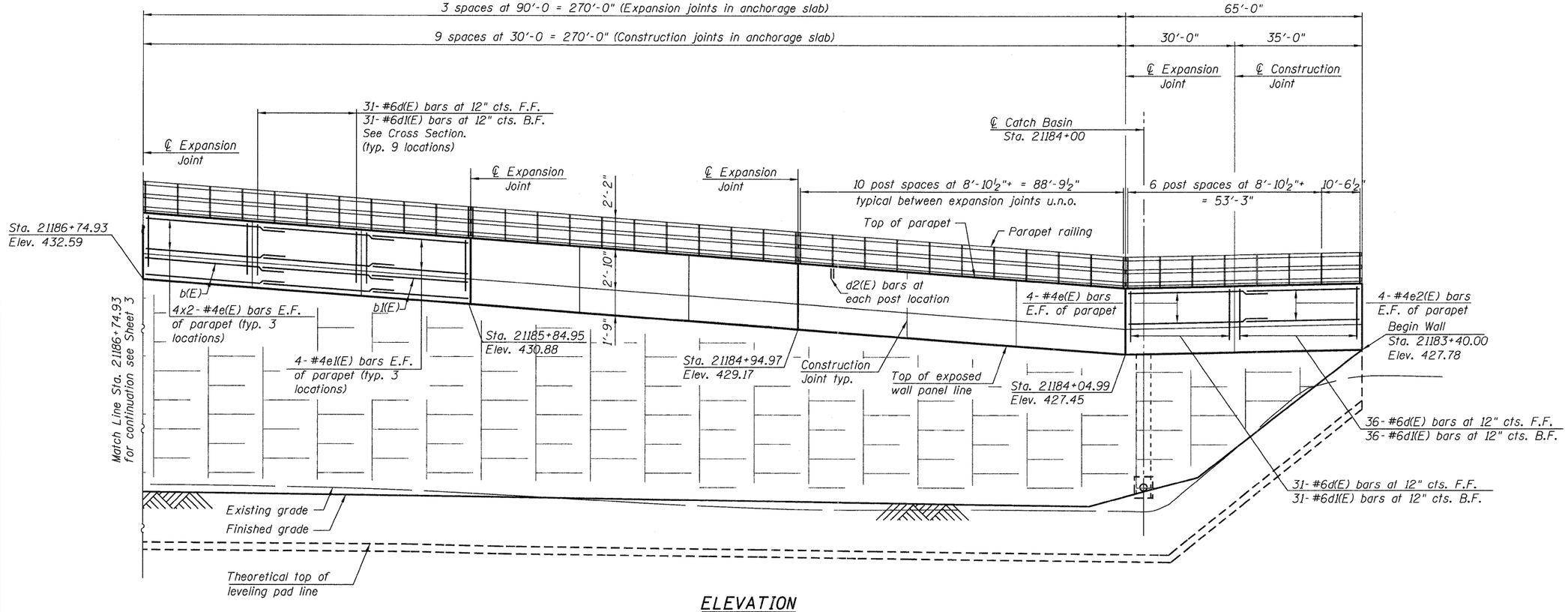

ELEVATION

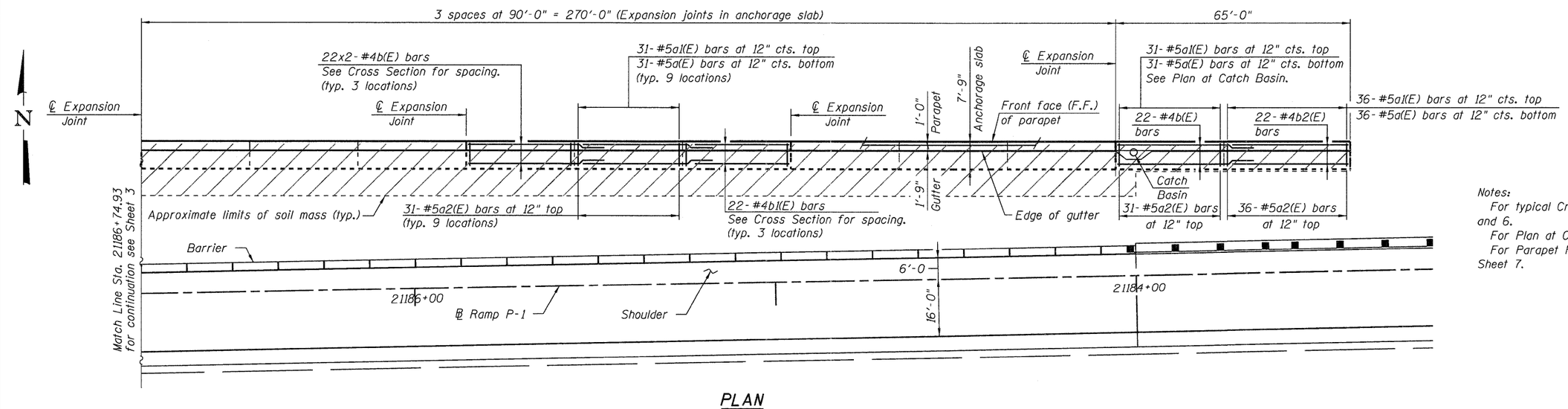

PLAN

Notes:
For typical Cross Section see Sheets 5 and 6.
For Plan at Catch Basin see Sheet 6.
For Parapet Railing details see Sheet 7.

McDonough Associates Inc.
Engineers / Architects
130 East Randolph Street Chicago, Illinois 60601

FILE NAME = 060W008-76A91-004-Detail.plan.dgn	USER NAME = jehrhart	DESIGNED - JCE	REVISED -
		CHECKED - PMH	REVISED -
	PLOT SCALE = 1:15.36	DRAWN - AMV	REVISED -
	PLOT DATE = 3/18/11	CHECKED - JCE	REVISED -

STATE OF ILLINOIS
DEPARTMENT OF TRANSPORTATION

MSE WALL – PLAN AND ELEVATION
STRUCTURE NO. 060–W008
SHEET NO. 4 OF 19 SHEETS

F.A.I. RTE.	SECTION	COUNTY	TOTAL SHEETS	SHEET NO.
270	60-1B-1	MADISON	712	516
		CONTRACT NO. 76A91		
		ILLINOIS FED. AID PROJECT		

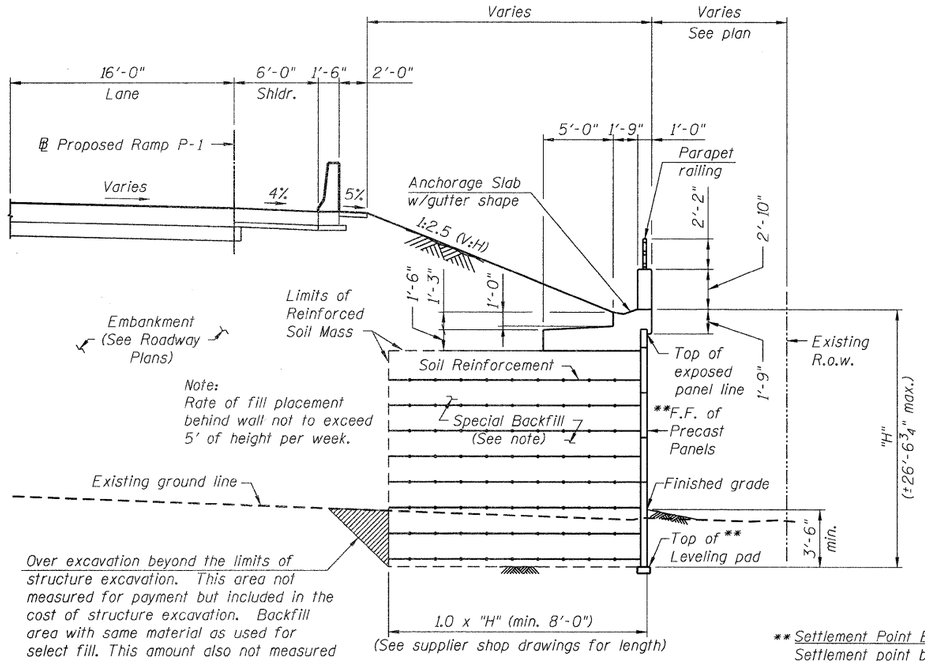

TYPICAL WALL SECTION

(Looking West)

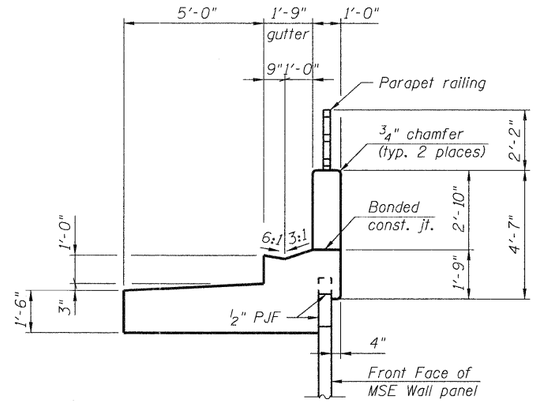

TYPICAL SECTION THROUGH PARAPET SHOWING DIMENSIONS

** Settlement Point Benchmarks

Settlement point benchmarks shall be established at the locations indicated on the plans at the face of the wall and on the leveling pad. Station and offset locations shown on the plans are subject to field conditions and may be adjusted at the discretion of the Engineer. The frequency of settlement readings shall be at a minimum once each day over the course of the first week's load increment (no greater than five feet in height), then once every other day for the remainder of construction, or as determined by the Engineer, depending on the observed rate of settlement. The rate of settlement will be based on settlement data versus time plot, with the initial reading being taken at the top of the leveling pad prior to any MSE wall construction.

Settlement Point Benchmarks aren't measured for payment but included in the cost of Mechanically Stabilizied Earth Retaining Wall. See Sheet 1 for locations.

MSE WALL BILL OF MATERIAL

Bar	No.	Size	Length	Shape
a(E)	1090	#5	9'-4"	
a1(E)	1090	#5	6'-0"	
a2(E)	1090	#5	4'-1"	
b(E)	506	#4	33'-0"	
b1(E)	242	#4	29'-8"	
b2(E)	22	#4	34'-8"	
b3(E)	2	#5	11'-2"	
b4(E)	2	#5	6'-5"	
d(E)	1090	#6	4'-10"	
d1(E)	1090	#6	6'-7"	
d2(E)	258	#4	2'-2"	
e(E)	184	#4	33'-0"	
e1(E)	88	#4	29'-8"	
e2(E)	8	#4	34'-8"	
Structure Excavation			Cu. Yd.	3,520
Concrete Structures			Cu. Yd.	686.1
Reinforcement Bars, Epoxy Coated			Pound	63,620
Mechanically Stabilized Earth Retaining Wall			Sq. Ft.	19,560

Bars indicated thus 1 x 15-#5 etc. indicates 1 line of bars with 15 lengths per line.

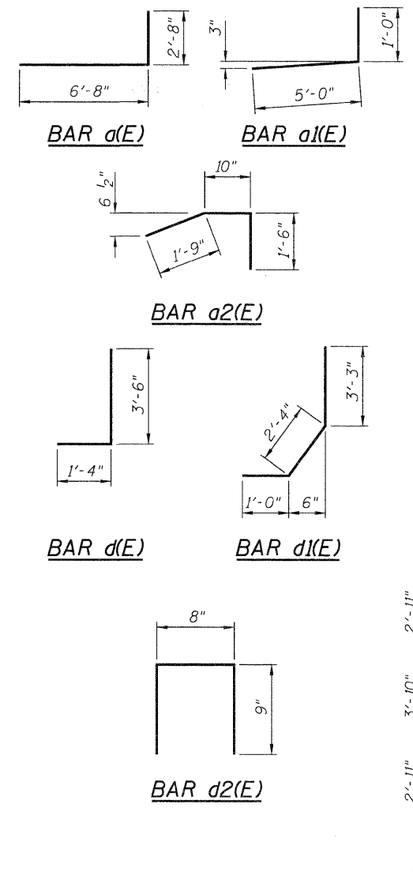

Bar Size	No.
#4	2'-1"
#5	2'-7"
#6	3'-1"

Minimum Lap Lengths

Notes:
For Parapet Railing see Railing Details on Sheet 7.

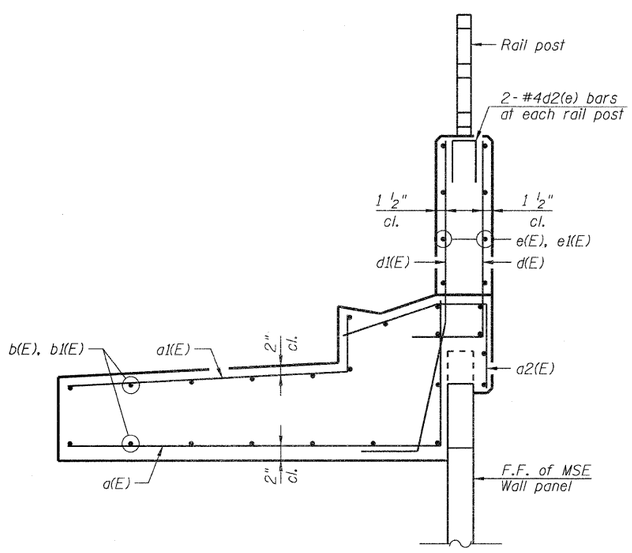

TYPICAL SECTION THROUGH PARAPET SHOWING REINFORCEMENT

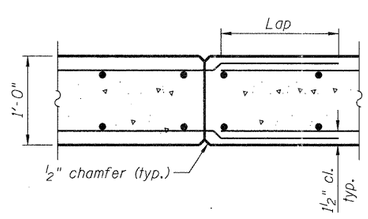

CONSTRUCTION JOINT DETAILS IN PARAPET

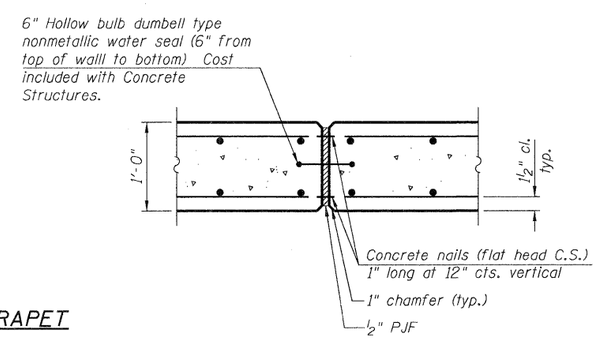

EXPANSION JOINT DETAILS IN PARAPET

McDonough Associates Inc.
Engineers / Architects
130 East Randolph Street Chicago, Illinois 60601

FILE NAME = 060W008-76A91-005-Details.dgn	USER NAME = jehrhart	DESIGNED - JCE	REVISED - 4/20/11	STATE OF ILLINOIS DEPARTMENT OF TRANSPORTATION	MSE WALL - SECTIONS AND DETAILS STRUCTURE NO. 060-W008	F.A.I. RTE.	SECTION	COUNTY	TOTAL SHEETS / SHEET NO.
		CHECKED - PMH	REVISED -			270	60-1B-1	MADISON	712 / 517
	PLOT SCALE = 1:5.33333	DRAWN - AMV	REVISED -					CONTRACT NO. 76A91	
	PLOT DATE = 4/20/11	CHECKED - JCE	REVISED -		SHEET NO. 5 OF 19 SHEETS		ILLINOIS	FED. AID PROJECT	

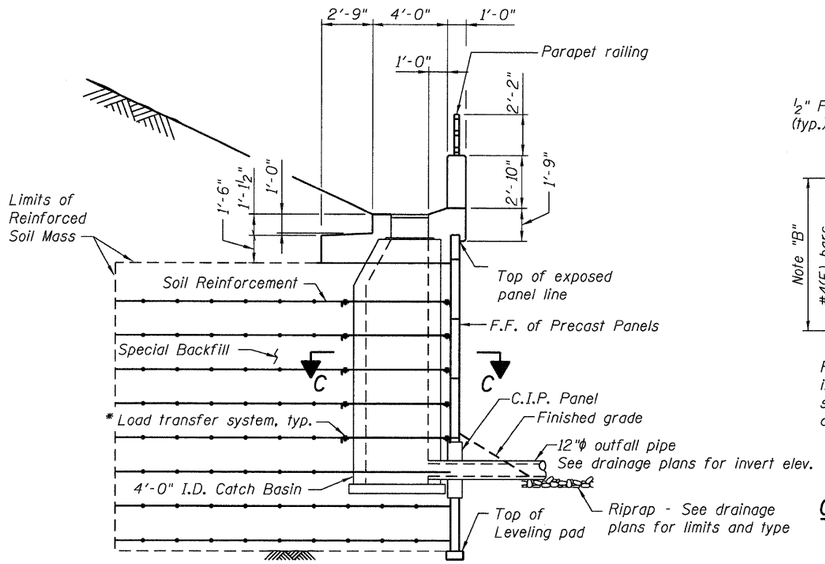

* M.S.E. supplier to design load transer system to accommodate concrete pipe and catch basin.

SECTION AT DRAINAGE STRUCTURE

(Looking West)

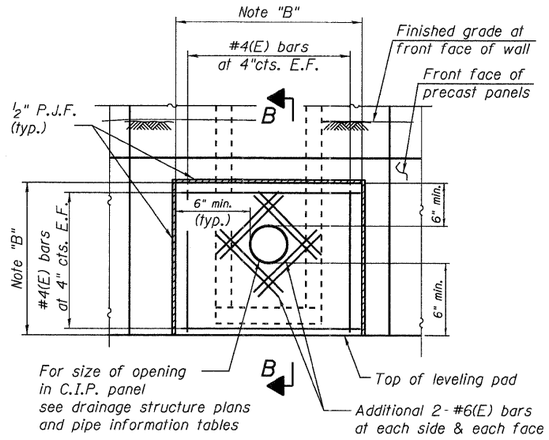

VIEW A-A
CAST IN PLACE (C.I.P.) PANEL ELEVATION

Note "B"
Cast-in-place panel (C.I.P.) Dimensions to be determined by Precast panel supplier.

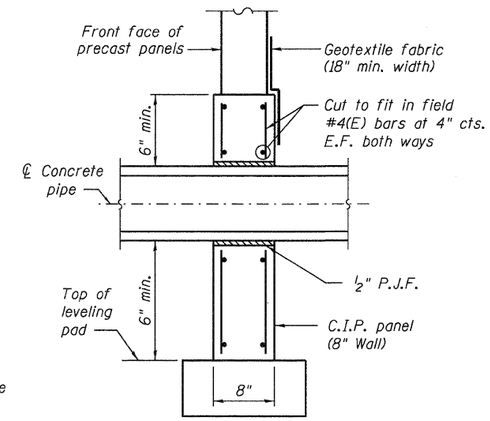

SECTION B-B
TYPICAL SECTION THROUGH C.I.P. PANEL

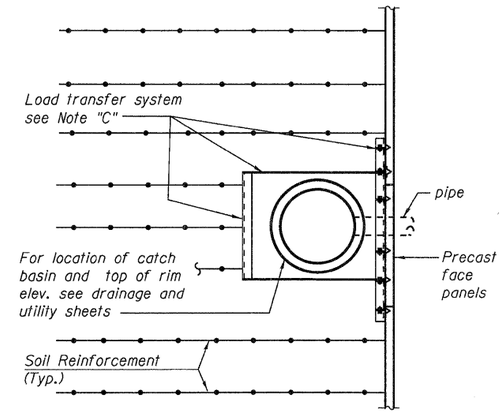

SECTION C-C

Note "C"
M.S.E. supplier to design load transfer system to accommodate catch basins.

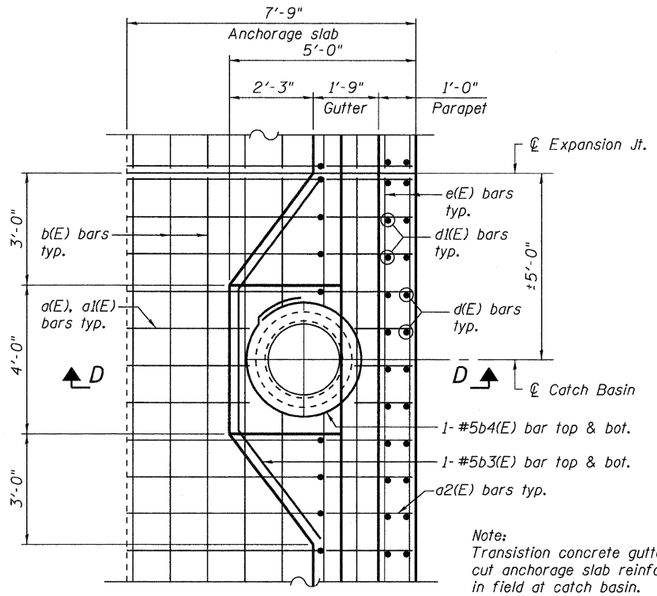

Note:
Transistion concrete gutter and cut anchorage slab reinforcing in field at catch basin.

PLAN AT CATCH BASIN

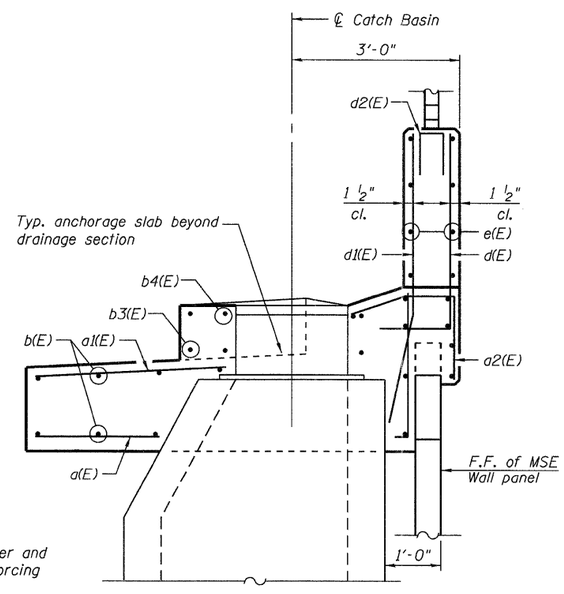

SECTION D-D

Note:
For Typical Parapet Sections and details see Sheet 5.

McDonough Associates Inc.
Engineers / Architects
130 East Randolph Street Chicago, Illinois 60601

FILE NAME = 060W008-76A91-006-Details.dgn	USER NAME = jehrhart	DESIGNED - JCE	REVISED -	STATE OF ILLINOIS DEPARTMENT OF TRANSPORTATION	MSE WALL - SECTIONS AND DETAILS STRUCTURE NO. 060-W008	F.A.I. RTE.	SECTION	COUNTY	TOTAL SHEETS / SHEET NO.
		CHECKED - PMH	REVISED -			270	60-1B-1	MADISON	712 / 518
	PLOT SCALE = 1:0.0833333	DRAWN - AMV	REVISED -					CONTRACT NO. 76A91	
	PLOT DATE = 3/18/11	CHECKED - JCE	REVISED -		SHEET NO. 6 OF 19 SHEETS		ILLINOIS FED. AID PROJECT		

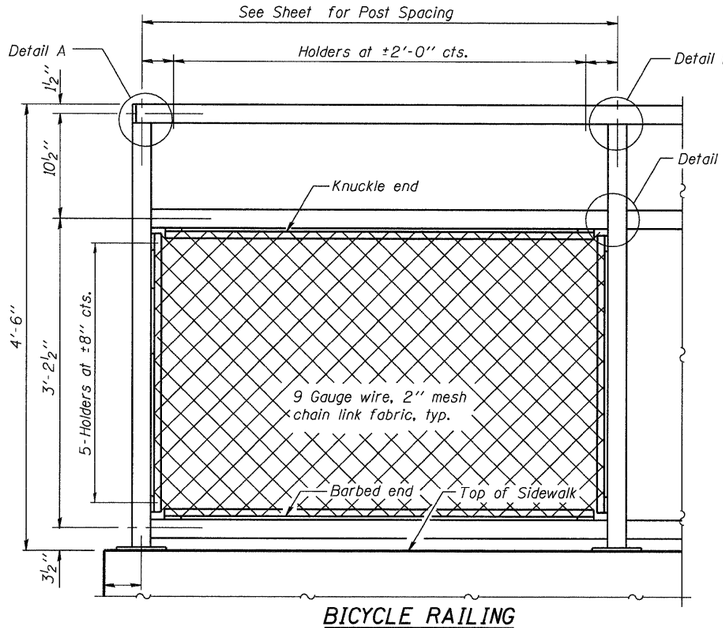

BICYCLE RAILING

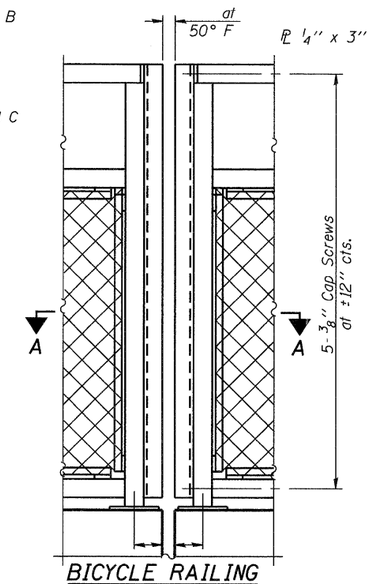

BICYCLE RAILING

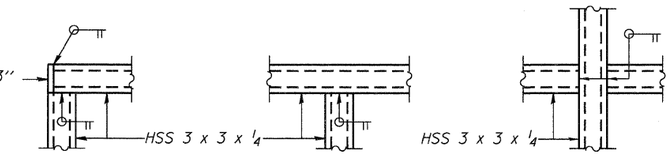

DETAIL A DETAIL B DETAIL C

Note:
All steel rail elements shall be galvanized according to Article 509.05 of the Standard Specifications.

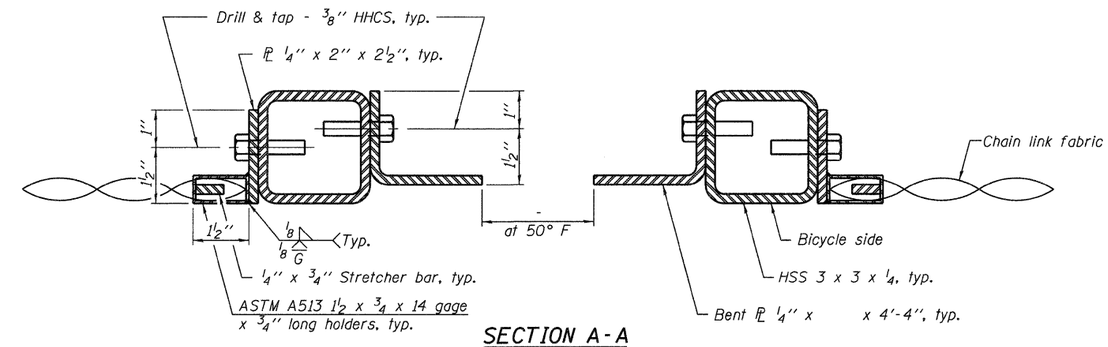

SECTION A-A

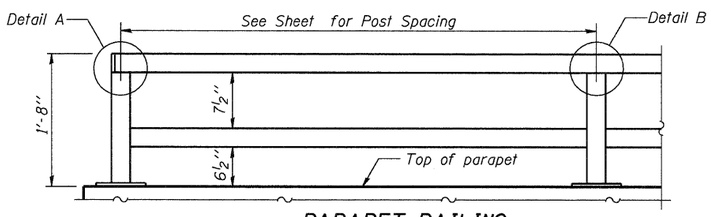

PARAPET RAILING ELEVATION
(Inside Face of Two Element Rail)

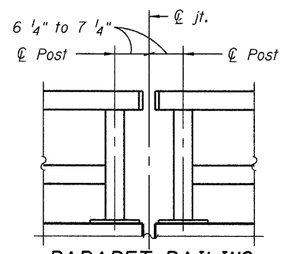

PARAPET RAILING ELEVATION AT EXPANSION JOINT
(Two Element Rail Shown - Three Element Rail Similar)

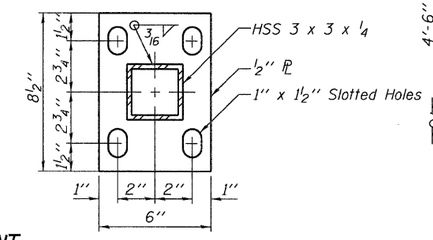

BASE PL

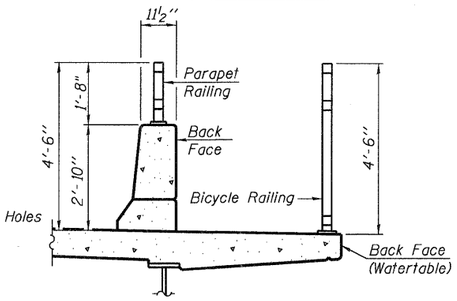

SECTION THRU DECK

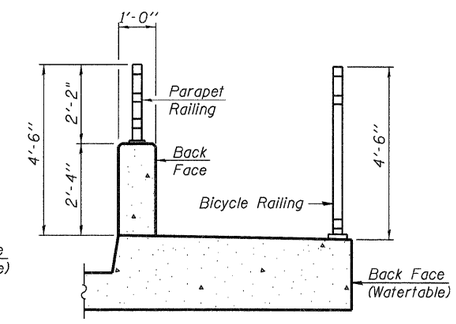

SECTION THRU SIDEWALK

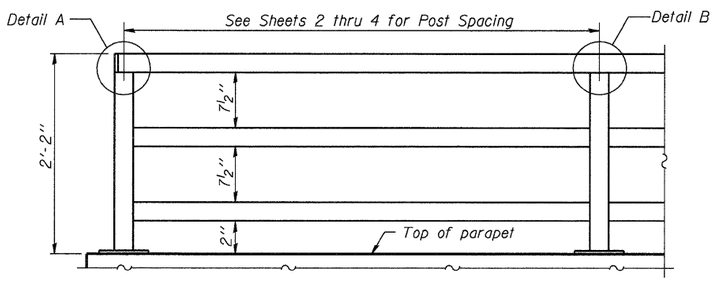

PARAPET RAILING ELEVATION
(Inside Face of Three Element Rail)

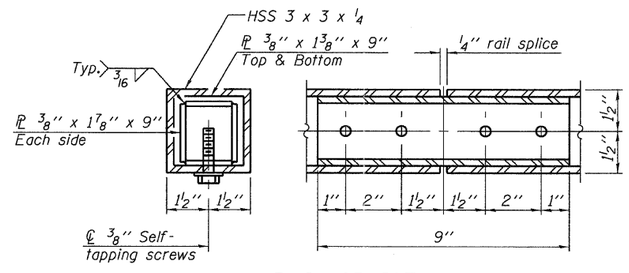

RAIL SPLICE

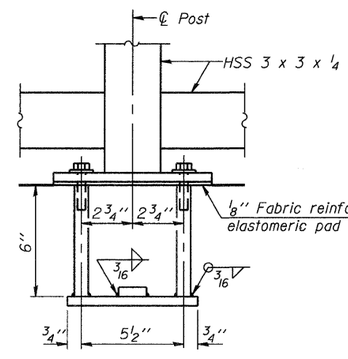

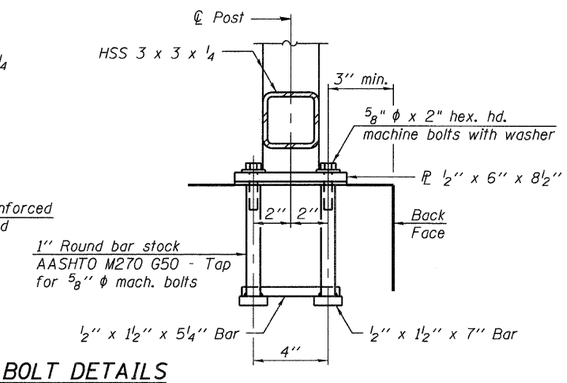

ANCHOR BOLT DETAILS

In lieu of the cast-in-place anchor device shown, the Contractor has the option of drilling and setting ⅝" ϕ anchor rods according to Article 509.06 of the Standard Specifications. Embedment shall be according to the manufacturer's specifications.

BILL OF MATERIAL

Item	Unit	Quantity
Parapet Railing	Foot	1,060

R-29 7-1-10 (10'-0" Maximum Post Spacing)

McDonough Associates Inc.
Engineers / Architects
130 East Randolph Street Chicago, Illinois 60601

FILE NAME = 260W008-76A91-007-Railing.dgn	USER NAME = jehrhart	DESIGNED - JCE	REVISED -
		CHECKED - PMH	REVISED -
	PLOT SCALE = 1:0.0833333	DRAWN - AMV	REVISED -
	PLOT DATE = 3/18/11	CHECKED - JCE	REVISED -

STATE OF ILLINOIS
DEPARTMENT OF TRANSPORTATION

RAILING DETAILS
STRUCTURE NO. 060-W008
SHEET NO. 7 OF 19 SHEETS

F.A.I. RTE.	SECTION	COUNTY	TOTAL SHEETS	SHEET NO.
270	60-1B-1	MADISON	712	519
		CONTRACT NO. 76A91		
		ILLINOIS FED. AID PROJECT		

Illinois Department of Transportation
Division of Highways
Kaskaskia Engineering Group

SOIL BORING LOG

Page 1 of 2
Date 6/21/10

ROUTE I-270 DESCRIPTION I-270 CORC Retaining Wall LOGGED BY IK
SECTION 60-1B-1 LOCATION SEC.29, TWP. 4N, RNG. 9W, PM
COUNTY Madison DRILLING METHOD HSA/Mud Rotary HAMMER TYPE Automatic

STRUCT. NO.
Station
BORING NO. RT-1
Station 0+00
Offset 7.00ft South
Ground Surface Elev. 430.2 ft

Surface Water Elev. ft
Stream Bed Elev. ft
Groundwater Elev.:
First Encounter 414.2 ft ▼
Upon Completion N/A ft
After N/A Hrs. N/A ft

Description	Elev.	DEPTH (ft)	BLOWS (/6")	UCS Qu (tsf)	MOIST (%)
TOPSOIL	429.15				
Brown SILTY SAND			4		
			8		19
			9		
Gray Fat CLAY	428.65		3		
			5		34
		-5	8		
Brown SILTY SAND	424.65		6		
			7		
			13		
Sand = 68.5%, Silt/CL=31.5%, Gravel=0%			8		
		-10	11		
			10		
			5		
			12		
			14		
Brown SILTY SAND	416.65		6		
			11		
		-15	12		
Brown Fine SAND, with Silt	414.15 ▼		6		
			7		
			11		
			2		
			6		
		-20	6		
Brown Fine SAND, with Silt (continued)	409.15				
Gray SILTY SAND			2		
			2		
			1		
			1		
			1		
	405.15	-25			
Gray SANDY SILT			WH		
			1		33
			1		
Gray Lean CLAY, Trace Sand	401.65		WH		
			1		53
		-30	2		
			1		
			1		47
			2		
Gray SANDY SILT	396.65		3		
			1		31
		-35	2		
Sand=45.4%, Silt/CL=55.0%, Gravel=0.0%			WH		
			2		
			2		
Gray Fine SAND, with Silt, Trace Gravel	391.65		8		
			8		
		-40	10		

The Unconfined Compressive Strength (UCS) Failure Mode is indicated by (B-Bulge, S-Shear, P-Penetrometer)
The SPT (N value) is the sum of the last two blow values in each sampling zone (AASHTO T206)

BBS, from 137 (Rev. 8-99)

Illinois Department of Transportation
Division of Highways
Kaskaskia Engineering Group

SOIL BORING LOG

Page 2 of 2
Date 6/21/10

ROUTE I-270 DESCRIPTION I-270 CORC Retaining Wall LOGGED BY IK
SECTION 60-1B-1 LOCATION SEC.29, TWP. 4N, RNG. 9W, PM
COUNTY Madison DRILLING METHOD HSA/Mud Rotary HAMMER TYPE Automatic

STRUCT. NO.
Station
BORING NO. RT-1
Station 0+00
Offset 7.00ft South
Ground Surface Elev. 430.2 ft

Surface Water Elev. ft
Stream Bed Elev. ft
Groundwater Elev.:
First Encounter 414.2 ft ▼
Upon Completion N/A ft
After N/A Hrs. N/A ft

Description	Elev.	DEPTH (ft)	BLOWS (/6")	UCS Qu (tsf)	MOIST (%)
Gray Fine SAND, with Silt, Trace Gravel (continued)					
Gray Fine SAND, with Silt, Trace Gravel			11		
			13		
			18		
Gray Fine SAND, with Silt	386.65		8		
			13		
		-45	18		
Gray-brown Fine SAND, Trace Silt and Gravel	384.15		10		
			15		
			19		
			9		
			18		
		-50	25		
Gray Fine SAND, Trace Silt and Gravel	378.65		11		
			18		
		-55	29		
Gray Fine SAND, Trace Silt and Gravel (continued)					
			14		
			15		
			19		
			13		
			14		
		-70	20		
			13		
			13		
	355.15	-75	10		

The Unconfined Compressive Strength (UCS) Failure Mode is indicated by (B-Bulge, S-Shear, P-Penetrometer)
The SPT (N value) is the sum of the last two blow values in each sampling zone (AASHTO T206)

BBS, from 137 (Rev. 8-99)

Illinois Department of Transportation
Division of Highways
Kaskaskia Engineering Group

SOIL BORING LOG

Page 1 of 2
Date 6/21/10

ROUTE I-270 DESCRIPTION I-270 CORC Retaining Wall LOGGED BY IK
SECTION 60-1B-1 LOCATION SEC.29, TWP. 4N, RNG. 9W, PM
COUNTY Madison DRILLING METHOD HSA/Mud Rotary HAMMER TYPE Automatic

STRUCT. NO.
Station
BORING NO. RT-2
Station 0+50
Offset 0.00ft
Ground Surface Elev. 428.2 ft

Surface Water Elev. ft
Stream Bed Elev. ft
Groundwater Elev.:
First Encounter 417.2 ft ▼
Upon Completion N/A ft
After N/A Hrs. N/A ft

Description	Elev.	DEPTH (ft)	BLOWS (/6")	UCS Qu (tsf)	MOIST (%)
TOPSOIL	427.19				
FILL: Brown SANDY SILT			5		
			4		22
			5		
FILL: Gray Lean CLAY, with Sand	424.69		4		
			5		20
		-5	6		
Brown Fine SAND, with Silt	421.69		5		
			9		
			13		
			4		
			10		
		-10	11		
			3		
			3		
			3		
			4		
			8		
		-15	9		
Gray-brown Fine SAND, with Silt	412.19		4		
			5		
			4		
Brown Fine SAND, with Silt Sand=91.6%, Silt/CL=8.4%, Gravel=0.0%	410.19		3		
			2		30
		-20	3		
Gray SILTY SAND	407.19		1		
			1		22
			1		
Gray Lean CLAY, with Sand	405.19		WH		
			WH		32
		-25	2		
Gray SILTY SAND Wet Density=106.8pcf, Dry Density=84.6pcf	402.19		ST		29
Gray SANDY Lean CLAY Sand=37.0%, Silt/CL=63.0%, Gravel=0.0%	399.69		WH		
			2		30
		-30	2		
Gray Fine SAND, Trace Silt and Gravel	397.69		10		
			10		
			12		
			4		
			10		
		-35	11		
			8		
			12		
			17		
Gray Fine SAND, Trace Silt	389.69		8		
			11		
		-40	16		

The Unconfined Compressive Strength (UCS) Failure Mode is indicated by (B-Bulge, S-Shear, P-Penetrometer)
The SPT (N value) is the sum of the last two blow values in each sampling zone (AASHTO T206)

BBS, from 137 (Rev. 8-99)

Illinois Department of Transportation
Division of Highways
Kaskaskia Engineering Group

SOIL BORING LOG

Page 2 of 2
Date 6/21/10

ROUTE I-270 DESCRIPTION I-270 CORC Retaining Wall LOGGED BY IK
SECTION 60-1B-1 LOCATION SEC.29, TWP. 4N, RNG. 9W, PM
COUNTY Madison DRILLING METHOD HSA/Mud Rotary HAMMER TYPE Automatic

STRUCT. NO.
Station
BORING NO. RT-2
Station 0+50
Offset 0.00ft
Ground Surface Elev. 428.2 ft

Surface Water Elev. ft
Stream Bed Elev. ft
Groundwater Elev.:
First Encounter 417.2 ft ▼
Upon Completion N/A ft
After N/A Hrs. N/A ft

Description	Elev.	DEPTH (ft)	BLOWS (/6")	UCS Qu (tsf)	MOIST (%)
Gray Fine SAND, Trace Silt (continued)					
Gray Fine SAND, Trace Silt and Gravel	387.19		11		
			9		
			10		
Gray Fine SAND, Trace Gravel	384.69		4		
			5		
		-45	9		
Gray Fine SAND, Trace Silt and Gravel	382.19		11		
			23		
			30		
Gray Fine SAND, Trace Silt	379.69		10		
			13		
		-55	21		
Gray Fine to Coarse SAND, Trace Silt and Gravel	374.69		13		
			14		
		-65	9		
Gray Fine to Coarse SAND, Trace Silt and Gravel (continued)					
Gray Fine to Medium SAND, Trace Silt and Gravel	364.69		18		
			30		
		-65	28		
Gray Fine to Coarse SAND, Trace Gravel	359.69		10		
			18		
		-70	26		
Gray Fine to Coarse SAND, with Gravel	354.69		9		
			11		
	353.19	-75	12		

The Unconfined Compressive Strength (UCS) Failure Mode is indicated by (B-Bulge, S-Shear, P-Penetrometer)
The SPT (N value) is the sum of the last two blow values in each sampling zone (AASHTO T206)

BBS, from 137 (Rev. 8-99)

McDonough Associates Inc.
Engineers / Architects
130 East Randolph Street Chicago, Illinois 60601

FILE NAME = 060W008-76A91-008-Soil_Borings.dgn	USER NAME = jehrhart	DESIGNED - JCE	REVISED -	STATE OF ILLINOIS DEPARTMENT OF TRANSPORTATION
		CHECKED - PMH	REVISED -	
	PLOT SCALE = 1:0.0833333	DRAWN - AMV	REVISED -	
	PLOT DATE = 3/18/11	CHECKED - JCE	REVISED -	

SOIL BORING LOGS
STRUCTURE NO. 060-W008
SHEET NO. 8 OF 19 SHEETS

F.A.I. RTE.	SECTION	COUNTY	TOTAL SHEETS	SHEET NO.
270	60-1B-1	MADISON	712	520
		CONTRACT NO. 76A91		
		ILLINOIS FED. AID PROJECT		

Illinois Department of Transportation
Division of Highways
Kaskaskia Engineering Group

SOIL BORING LOG

Page 1 of 2

Date 6/22/10

ROUTE I-270 DESCRIPTION I-270 CORC Retaining Wall LOGGED BY IK

SECTION 60-1B-1 LOCATION SEC.29, TWP. 4N, RNG. 9W, PM

COUNTY Madison DRILLING METHOD HSA/Mud Rotary HAMMER TYPE Automatic

STRUCT. NO.
Station

BORING NO. RT-3
Station 1+00
Offset 25.00ft South
Ground Surface Elev. 427.7 ft

Surface Water Elev. ft
Stream Bed Elev. ft

Groundwater Elev.:
First Encounter 417.7 ft ▼
Upon Completion N/A ft
After N/A Hrs. N/A ft

DEPTH (ft)	BLOWS (/6")	UCS Qu (tsf)	MOIST (%)
TOPSOIL 426.73			
Brown Fine SAND	3		
	3		
	3		
424.23			
Brown SILTY SAND	3		
	10		
-5	13		
Sand=86.8%, Silt/CL=13.2%, Gravel=0.0%	5		
	9		
	10		
419.23			
Brown SILTY SAND, Trace Gravel	4		
	7		16
▼-10	5		
418.23			
Brown Fat CLAY, with Sand	WH		
	1		35
	1		
414.23			
Brown Fat CLAY, Trace Sand LL=73, PL=26, PI=47	1		
	2		38
-15	2		
411.73			
Gray-brown Fat CLAY, Trace Sand	1		
	1		43
	2		
409.23			
Gray-brown SILTY SAND	3		
	3		53
-20	4		

DEPTH (ft)	BLOWS (/6")	UCS Qu (tsf)	MOIST (%)
Gray-brown SILTY SAND *(continued)* 406.73			
Gray-brown SANDY SILT	1		
	2		30
	3		
404.23			
Gray-brown Fine SAND, with Silt	4		
	2		42
-25	2		
	3		
	4		29
	5		
	4		
	6		
-30	11		
396.73			
Brown Fine SAND, Trace Silt	7		
	13		
	16		
394.23			
Gray Fine to Coarse SAND, with Silt, Trace Gravel Sand=92.5%, Silt/CL=6.9%, Gravel=0.6%	8		
	7		
-35	11		
391.73			
Gray Fine SAND, with Silt	6		
	12		
	13		
	5		
	12		
-40	19		

The Unconfined Compressive Strength (UCS) Failure Mode is indicated by (B-Bulge, S-Shear, P-Penetrometer)
The SPT (N value) is the sum of the last two blow values in each sampling zone (AASHTO T206)

BBS, from 137 (Rev. 8-99)

Illinois Department of Transportation
Division of Highways
Kaskaskia Engineering Group

SOIL BORING LOG

Page 2 of 2

Date 6/22/10

ROUTE I-270 DESCRIPTION I-270 CORC Retaining Wall LOGGED BY IK

SECTION 60-1B-1 LOCATION SEC.29, TWP. 4N, RNG. 9W, PM

COUNTY Madison DRILLING METHOD HSA/Mud Rotary HAMMER TYPE Automatic

STRUCT. NO.
Station

BORING NO. RT-3
Station 1+00
Offset 25.00ft South
Ground Surface Elev. 427.7 ft

Surface Water Elev. ft
Stream Bed Elev. ft

Groundwater Elev.:
First Encounter 417.7 ft ▼
Upon Completion N/A ft
After N/A Hrs. N/A ft

DEPTH (ft)	BLOWS (/6")	UCS Qu (tsf)	MOIST (%)
Gray Fine SAND, with Silt *(continued)* 386.73			
Gray Fine to Coarse SAND, with Gravel	10		
	8		
	11		
	10		
	13		
-45	19		
381.73			
Gray Fine SAND, Trace Silt	8		
	10		24
	13		
	8		
	9		24
-50	14		
374.23			
Gray Fine to Coarse SAND, Trace Gravel	11		
	21		
-55	24		
369.23			
Gray Fine SAND, Trace Silt	18		
	19		
-60	21		

DEPTH (ft)	BLOWS (/6")	UCS Qu (tsf)	MOIST (%)
Gray Fine SAND, Trace Silt *(continued)*			
364.23			
Gray Fine to Medium SAND	14		
	13		
-65	12		
359.23			
Gray Fine to Medium SAND, Trace Gravel	13		
	26		
-70	16		
354.23			
Gray-brown, GRAVEL	13		
	17		
352.73 -75	13		
-80			

The Unconfined Compressive Strength (UCS) Failure Mode is indicated by (B-Bulge, S-Shear, P-Penetrometer)
The SPT (N value) is the sum of the last two blow values in each sampling zone (AASHTO T206)

BBS, from 137 (Rev. 8-99)

Illinois Department of Transportation
Division of Highways
Kaskaskia Engineering Group

SOIL BORING LOG

Page 1 of 2

Date 6/23/10

ROUTE I-270 DESCRIPTION I-270 CORC Retaining Wall LOGGED BY IK

SECTION 60-1B-1 LOCATION SEC.29, TWP. 4N, RNG. 9W, PM

COUNTY Madison DRILLING METHOD HSA/Mud Rotary HAMMER TYPE Automatic

STRUCT. NO.
Station

BORING NO. RT-4
Station 1+50
Offset 0.00ft
Ground Surface Elev. 422.6 ft

Surface Water Elev. ft
Stream Bed Elev. ft

Groundwater Elev.:
First Encounter 411.6 ft ▼
Upon Completion N/A ft
After N/A Hrs. N/A ft

DEPTH (ft)	BLOWS (/6")	UCS Qu (tsf)	MOIST (%)
TOPSOIL 421.55			
Brown Lean CLAY, with Sand	3		
	4	4.0 P	15
	5		
418.55			
Brown Fine SAND, Trace Silt	3		
	7		4
-5	7		
417.05			
Brown SILTY SAND	3		
	6		23
	5		
414.55			
Gray Lean CLAY	1		
	2	1.0 P	39
-10	2		
412.05			
Brown SILTY SAND ▼	WH		
	1		32
	1		
409.05			
Brown Fine SAND, with Silt	1		
	3		33
-15	2		
407.05			
Brown Lean CLAY, with SAND	WH		
	2		34
	1		
404.05			
Brown SANDY SILT	2		
	1		36
-20	3		

DEPTH (ft)	BLOWS (/6")	UCS Qu (tsf)	MOIST (%)
Brown SANDY SILT *(continued)* 401.55			
Gray SANDY CLAY	2		
400.55			
Brown SILTY SAND	1		44
	4		
	2		
	3		34
-25	3		
397.05			
Brown Fine SAND, with SILT Sand=93.7%, Silt/CL=6.3%, Gravel=0.0%	9		
	7		
	9		
394.05			
Brown Fine to Medium SAND, with Silt	2		
	6		
-30	13		
	9		
	13		
	13		
	5		
	7		
-35	7		
386.55			
Brown Fine to Medium SAND, with Silt, Trace Gravel	6		
	8		
	14		
	5		
	6		
-40	8		

The Unconfined Compressive Strength (UCS) Failure Mode is indicated by (B-Bulge, S-Shear, P-Penetrometer)
The SPT (N value) is the sum of the last two blow values in each sampling zone (AASHTO T206)

BBS, from 137 (Rev. 8-99)

Illinois Department of Transportation
Division of Highways
Kaskaskia Engineering Group

SOIL BORING LOG

Page 2 of 2

Date 6/23/10

ROUTE I-270 DESCRIPTION I-270 CORC Retaining Wall LOGGED BY IK

SECTION 60-1B-1 LOCATION SEC.29, TWP. 4N, RNG. 9W, PM

COUNTY Madison DRILLING METHOD HSA/Mud Rotary HAMMER TYPE Automatic

STRUCT. NO.
Station

BORING NO. RT-4
Station 1+50
Offset 0.00ft
Ground Surface Elev. 422.6 ft

Surface Water Elev. ft
Stream Bed Elev. ft

Groundwater Elev.:
First Encounter 411.6 ft ▼
Upon Completion N/A ft
After N/A Hrs. N/A ft

DEPTH (ft)	BLOWS (/6")	UCS Qu (tsf)	MOIST (%)
Brown Fine to Medium SAND, with Silt, Trace Gravel *(continued)* 381.55			
Gray Fine to Coarse SAND, with Silt, Trace Gravel	8		
	10		
	11		
379.05			
Gray Fine to Medium SAND, Trace Silt	7		
	12		
-45	13		
376.55			
Gray Fine to Coarse SAND, Trace Silt and Gravel	10		
	15		
	26		
Sand=91.8%, Silt/CL=4.9%, Gravel=3.3%	15		
	17		
-50	17		
	8		
	11		
-55	12		
364.05			
Gray Medium to Coarse SAND, with Gravel	13		
	10		
-60	10		

DEPTH (ft)	BLOWS (/6")	UCS Qu (tsf)	MOIST (%)
Gray Medium to Coarse SAND, with Gravel *(continued)*			
359.05			
Gray Fine to Medium SAND	18		
	25		
-65	32		
354.05			
Gray Fine to Coarse SAND, with Gravel	6		
	9		
-70	10		
349.05			
Brown Fine to Medium SAND, with Gravel	13		
	28		
347.55 -75	20		
-80			

The Unconfined Compressive Strength (UCS) Failure Mode is indicated by (B-Bulge, S-Shear, P-Penetrometer)
The SPT (N value) is the sum of the last two blow values in each sampling zone (AASHTO T206)

BBS, from 137 (Rev. 8-99)

McDonough Associates Inc.
Engineers / Architects
130 East Randolph Street Chicago, Illinois 60601

FILE NAME = 060W008-76A91-009-Soil_Borings.dgn	USER NAME = jehrhart	DESIGNED - JCE	REVISED -	STATE OF ILLINOIS DEPARTMENT OF TRANSPORTATION	SOIL BORING LOGS STRUCTURE NO. 060-W008	F.A.I. RTE.	SECTION	COUNTY	TOTAL SHEETS	SHEET NO.
		CHECKED - PMH	REVISED -			270	60-1B-1	MADISON	712	521
	PLOT SCALE = 1:0.0833333	DRAWN - AMV	REVISED -					CONTRACT NO. 76A91		
	PLOT DATE = 3/18/11	CHECKED - JCE	REVISED -		SHEET NO. 9 OF 19 SHEETS		ILLINOIS FED. AID PROJECT			

Illinois Department of Transportation
Division of Highways
Kaskaskia Engineering Group

SOIL BORING LOG

Page 1 of 2

Date 6/23/10

ROUTE I-270 DESCRIPTION I-270 CORC Retaining Wall LOGGED BY IK

SECTION 60-1B-1 LOCATION SEC.29, TWP. 4N, RNG. 9W, PM

COUNTY Madison DRILLING METHOD HSA/Mud Rotary HAMMER TYPE Automatic

STRUCT. NO.
Station

BORING NO. RT-5
Station 2+00
Offset 0.00ft
Ground Surface Elev. 421.8 ft

Surface Water Elev. ft
Stream Bed Elev. ft

Groundwater Elev.:
First Encounter 405.8 ft ▼
Upon Completion N/A ft
After N/A Hrs. N/A ft

Description	Elev.	DEPTH (ft)	BLOWS (/6")	UCS Qu (tsf)	MOIST (%)
TOPSOIL	420.81				
Brown SILTY SAND			2		
			6		11
			6		
Brown SANDY SILT	418.31		3		
			6		15
		-5	5		
Brown-gray Lean CLAY	413.81		1		
			2		38
		-10	3		
Brown SANDY SILT	411.31		WH		
			2		31
			3		
			WH		
			1		29
		-15	2		
Brown SILT, with Sand	405.81 ▼		WH		
			WH		37
			1		
Brown SILTY SAND	403.81				
			1		
			2		28
		-20	3		
Brown SILTY SAND *(continued)*	400.81				
Brown Fine to Medium SAND, with Silt			3		
			7		28
			13		
Brown Fine SAND, with Silt	398.31		6		
			9		26
		-25	7		
Brown Fine to Medium SAND, Trace Silt	395.81		5		
			6		
			9		
Brown Fine to Coarse SAND, Trace Silt	393.31		5		
			10		
		-30	13		
Brown Fine SAND, Trace Silt Sand=95.8%, Silt/CL=4.2%, Gravel=0.0%	390.81		6		
			6		
			10		
Gray Fine to Medium SAND, Trace Silt	388.31		2		
			7		
		-35	13		
Gray Fine to Coarse SAND, Trace Silt	385.81		4		
			13		20
			14		
			4		
			8		
		-40	10		

The Unconfined Compressive Strength (UCS) Failure Mode is indicated by (B-Bulge, S-Shear, P-Penetrometer)
The SPT (N value) is the sum of the last two blow values in each sampling zone (AASHTO T206)

BBS, from 137 (Rev. 8-99)

Illinois Department of Transportation
Division of Highways
Kaskaskia Engineering Group

SOIL BORING LOG

Page 2 of 2

Date 6/23/10

ROUTE I-270 DESCRIPTION I-270 CORC Retaining Wall LOGGED BY IK

SECTION 60-1B-1 LOCATION SEC.29, TWP. 4N, RNG. 9W, PM

COUNTY Madison DRILLING METHOD HSA/Mud Rotary HAMMER TYPE Automatic

STRUCT. NO.
Station

BORING NO. RT-5
Station 2+00
Offset 0.00ft
Ground Surface Elev. 421.8 ft

Surface Water Elev. ft
Stream Bed Elev. ft

Groundwater Elev.:
First Encounter 405.8 ft ▼
Upon Completion N/A ft
After N/A Hrs. N/A ft

Description	Elev.	DEPTH (ft)	BLOWS (/6")	UCS Qu (tsf)	MOIST (%)
Gray Fine to Coarse SAND, Trace Silt *(continued)*	380.81				
Gray Fine to Medium SAND, Trace Silt			5		
			9		
			13		
			8		
			11		27
		-45	13		
Gray Fine to Coarse SAND, Trace Silt and Gravel	375.81		10		
			18		
			20		
Sand=95.4%, Silt/CL=1.5%, Gravel=3.1%			5		
			8		
		-50	10		
			6		
			6		
		-55	6		
Gray Fine to Medium SAND, Trace Silt	363.31		6		
			11		
		-60	18		
Gray Fine to Medium SAND, Trace Silt *(continued)*					
Gray Fine to Coarse SAND, Trace Gravel	358.31		7		
			9		
		-65	9		
Gray Fine to Medium SAND, Trace Gravel	353.31		5		
			15		
		-70	18		
Gray Fine to Medium SAND, Trace Silt and Gravel	348.31		11		
			12		
	346.81	-75	13		
		-80			

The Unconfined Compressive Strength (UCS) Failure Mode is indicated by (B-Bulge, S-Shear, P-Penetrometer)
The SPT (N value) is the sum of the last two blow values in each sampling zone (AASHTO T206)

BBS, from 137 (Rev. 8-99)

Illinois Department of Transportation
Division of Highways
Kaskaskia Engineering Group

SOIL BORING LOG

Page 1 of 2

Date 6/22/10

ROUTE I-270 DESCRIPTION I-270 CORC Retaining Wall LOGGED BY IK

SECTION 60-1B-1 LOCATION SEC.29, TWP. 4N, RNG. 9W, PM

COUNTY Madison DRILLING METHOD HSA/Mud Rotary HAMMER TYPE Automatic

STRUCT. NO.
Station

BORING NO. RT-6
Station 2+50
Offset 4.00ft South
Ground Surface Elev. 421.2 ft

Surface Water Elev. ft
Stream Bed Elev. ft

Groundwater Elev.:
First Encounter 412.2 ft ▼
Upon Completion N/A ft
After N/A Hrs. N/A ft

Description	Elev.	DEPTH (ft)	BLOWS (/6")	UCS Qu (tsf)	MOIST (%)
TOPSOIL	420.20				
Brown Lean CLAY, Trace Sand			2		
			3		14
			4		
Brown SANDY SILT	417.70		2		
			2		26
		-5	2		
			WH		
			WH		28
			3		
Brown Fine SAND, Trace Silt	412.70 ▼		WH		
			2		26
		-10	2		
Gray Lean CLAY, Trace Sand	410.70		1		
			1		36
			2		
Brown SANDY SILT	408.20		1		
			2		36
		-15	4		
			4		
			4		34
			8		
Brown Fine to Medium SAND, Trace Silt	402.70		3		
			4		
		-20	8		
Brown Fine to Medium SAND, Trace Silt *(continued)*	400.20				
Brown Fine SAND, Trace Silt Sand=97.9%, Silt/CL=2.1%, Gravel=0.0%			6		
			7		
			14		
			5		
			9		
		-25	8		
Brown Fine to Medium SAND, Trace Silt	395.20		8		
			13		
			15		
Brown Fine to Coarse SAND, Trace Silt	392.70		5		
			8		
		-30	8		
Brown Fine to Medium SAND, Trace Silt and Gravel	390.20		7		
			13		
			15		
Gray Fine SAND, Trace Silt	387.70		8		
			10		
		-35	11		
Gray Fine to Medium SAND, Trace Silt	385.20		6		
			11		
			12		
		-40	11		

The Unconfined Compressive Strength (UCS) Failure Mode is indicated by (B-Bulge, S-Shear, P-Penetrometer)
The SPT (N value) is the sum of the last two blow values in each sampling zone (AASHTO T206)

BBS, from 137 (Rev. 8-99)

Illinois Department of Transportation
Division of Highways
Kaskaskia Engineering Group

SOIL BORING LOG

Page 2 of 2

Date 6/22/10

ROUTE I-270 DESCRIPTION I-270 CORC Retaining Wall LOGGED BY IK

SECTION 60-1B-1 LOCATION SEC.29, TWP. 4N, RNG. 9W, PM

COUNTY Madison DRILLING METHOD HSA/Mud Rotary HAMMER TYPE Automatic

STRUCT. NO.
Station

BORING NO. RT-6
Station 2+50
Offset 4.00ft South
Ground Surface Elev. 421.2 ft

Surface Water Elev. ft
Stream Bed Elev. ft

Groundwater Elev.:
First Encounter 412.2 ft ▼
Upon Completion N/A ft
After N/A Hrs. N/A ft

Description	Elev.	DEPTH (ft)	BLOWS (/6")	UCS Qu (tsf)	MOIST (%)
Gray Fine to Medium SAND, Trace Silt *(continued)*	380.20				
Gray Fine to Coarse SAND, Trace Silt			5		
			11		
			13		
Gray Fine SAND, Trace Silt	377.70		8		
			13		
		-45	15		
Gray Fine to Coarse SAND, Trace Silt	375.20		6		
			12		
			17		
Gray Fine to Medium SAND, Trace Silt	372.70		8		
			11		
		-50	15		
Gray Fine to Coarse SAND, Trace Gravel	367.70		15		
			14		
		-55	8		
Gray Fine SAND, Trace Silt	362.70		14		
			27		
		-60	27		
Gray Fine SAND, Trace Silt *(continued)*					
Gray Fine to Coarse SAND, with Gravel, Trace Silt Sand=83.0%, Silt/CL=2.7%, Gravel=14.3%	357.70		7		
			7		
		-65	5		
Gray Fine to Coarse SAND, Trace Gravel and Silt	352.70		10		
			10		
		-70	11		
			19		
			41		
	346.20	-75	34		
		-80			

The Unconfined Compressive Strength (UCS) Failure Mode is indicated by (B-Bulge, S-Shear, P-Penetrometer)
The SPT (N value) is the sum of the last two blow values in each sampling zone (AASHTO T206)

BBS, from 137 (Rev. 8-99)

McDonough Associates Inc.
Engineers / Architects
130 East Randolph Street Chicago, Illinois 60601

FILE NAME = 060W008-76A91-010-Soil_Borings.dgn	USER NAME = jehrhart	DESIGNED - JCE	REVISED -	STATE OF ILLINOIS DEPARTMENT OF TRANSPORTATION	SOIL BORING LOGS STRUCTURE NO. 060-W008	F.A.I. RTE.	SECTION	COUNTY	TOTAL SHEETS / SHEET NO.
		CHECKED - PMH	REVISED -			270	60-1B-1	MADISON	712 / 522
	PLOT SCALE = 1:0.0833333	DRAWN - AMV	REVISED -					CONTRACT NO. 76A91	
	PLOT DATE = 3/18/11	CHECKED - JCE	REVISED -		SHEET NO. 10 OF 19 SHEETS		ILLINOIS FED. AID PROJECT		

Illinois Department of Transportation
Division of Highways
Kaskaskia Engineering Group

SOIL BORING LOG

Page 1 of 2

Date 6/28/10

ROUTE I-270 DESCRIPTION I-270 CORC Retaining Wall LOGGED BY IK

SECTION 60-1B-1 LOCATION SEC.29, TWP. 4N, RNG. 9W, PM

COUNTY Madison DRILLING METHOD HSA/Mud Rotary HAMMER TYPE Automatic

STRUCT. NO.
Station

BORING NO. RT-7
Station 3+00
Offset 25.00ft South
Ground Surface Elev. 422.8 ft

Surface Water Elev. ft
Stream Bed Elev. ft

Groundwater Elev.:
First Encounter 414.3 ft ▼
Upon Completion N/A ft
After N/A Hrs. N/A ft

Description	Elev.	DEPTH (ft)	BLOWS (/6")	UCS Qu (tsf)	MOIST (%)
TOPSOIL	421.76				
Brown Fine SAND, Trace Silt			3		
			5		
			6		
Brown SILTY SAND	419.28		5		
			5		23
		-5	5		
Gray-brown Lean CLAY	417.28		WH		
			1		33
			2		
Brown Fine to Medium SAND, with Silt ▼	414.78		ST		26
		-10			
			3		
			4		
			5		
Gray-brown Lean CLAY, with Sand	409.78		1		
			2		35
		-15	2		
Gray-brown SANDY SILT	406.78		2		
			1		37
			2		
Brown Fine to Medium SAND, Trace Silt	404.78		4		
			7		
		-20	13		
Brown Fine to Medium SAND, Trace Silt *(continued)*	394.28				
Brown Fine to Coarse SAND, Trace Silt and Gravel			8		
			11		
		-30	12		
Brown Fine to Medium SAND, Trace Silt	391.78		8		
			11		
			14		
Gray Fine SAND, Trace Silt	389.28		7		
			8		
		-35	13		
			7		
			10		
			11		
Gray Fine to Coarse SAND, Trace Silt	384.28		6		
			10		
		-40	13		

The Unconfined Compressive Strength (UCS) Failure Mode is indicated by (B-Bulge, S-Shear, P-Penetrometer)
The SPT (N value) is the sum of the last two blow values in each sampling zone (AASHTO T206)

BBS, from 137 (Rev. 8-99)

Illinois Department of Transportation
Division of Highways
Kaskaskia Engineering Group

SOIL BORING LOG

Page 2 of 2

Date 6/28/10

ROUTE I-270 DESCRIPTION I-270 CORC Retaining Wall LOGGED BY IK

SECTION 60-1B-1 LOCATION SEC.29, TWP. 4N, RNG. 9W, PM

COUNTY Madison DRILLING METHOD HSA/Mud Rotary HAMMER TYPE Automatic

STRUCT. NO.
Station

BORING NO. RT-7
Station 3+00
Offset 25.00ft South
Ground Surface Elev. 422.8 ft

Surface Water Elev. ft
Stream Bed Elev. ft

Groundwater Elev.:
First Encounter 414.3 ft ▼
Upon Completion N/A ft
After N/A Hrs. N/A ft

Description	Elev.	DEPTH (ft)	BLOWS (/6")	UCS Qu (tsf)	MOIST (%)
Gray Fine to Coarse SAND, Trace Silt *(continued)*	381.78				
Gray Fine to Medium SAND, Trace Silt			5		
			8		
			10		
			11		
			18		
		-45	18		
			7		
			11		
			14		
			12		
			13		
		-50	17		
Gray Fine to Coarse SAND, Trace Silt and Gravel	369.28		9		
			13		
		-55	14		
Gray Fine to Medium SAND, Trace Silt	364.28		13		
			15		
		-60	19		
Gray Fine to Medium SAND, Trace Silt *(continued)*	359.28				
Gray Fine to Coarse SAND, with Gravel			7		
			13		
		-65	25		
			3		
			4		
		-70	9		
Gray Fine to Coarse SAND, Trace Gravel	349.28		14		
			17		
	347.78	-75	19		

The Unconfined Compressive Strength (UCS) Failure Mode is indicated by (B-Bulge, S-Shear, P-Penetrometer)
The SPT (N value) is the sum of the last two blow values in each sampling zone (AASHTO T206)

BBS, from 137 (Rev. 8-99)

Illinois Department of Transportation
Division of Highways
Kaskaskia Engineering Group

SOIL BORING LOG

Page 1 of 2

Date 6/29/10

ROUTE I-270 DESCRIPTION I-270 CORC Retaining Wall LOGGED BY IK

SECTION 60-1B-1 LOCATION SEC.29, TWP. 4N, RNG. 9W, PM

COUNTY Madison DRILLING METHOD HSA/Mud Rotary HAMMER TYPE Automatic

STRUCT. NO.
Station

BORING NO. RT-8
Station 3+50
Offset 0.00ft
Ground Surface Elev. 420.4 ft

Surface Water Elev. ft
Stream Bed Elev. ft

Groundwater Elev.:
First Encounter 412.4 ft ▼
Upon Completion N/A ft
After N/A Hrs. N/A ft

Description	Elev.	DEPTH (ft)	BLOWS (/6")	UCS Qu (tsf)	MOIST (%)
TOPSOIL	419.40				
Brown SILTY SAND			2		
			4		15
			3		
			3		
			2		29
		-5	2		
Brown Fat CLAY	414.40		WH		
			1	0.25	36
			2	P	
Brown SAND, Trace Silt Sand = 96.7%, Silt/CL = 3.3%, Gravel = 0.0% ▼	412.40		ST		27
		-10			
Brown SILT, with SAND	409.90				
Brown SILTY SAND	408.90		2		
			1		35
			2		
			3		
			2		32
		-15	2		
			3		
			5		23
			8		
Brown Fine SAND, Trace Silt	402.40		6		
			8		
		-20	12		
Brown Fine SAND, Trace Silt *(continued)*	399.40				
Brown Fine to Medium SAND, Trace Silt			6		
			8		
			13		
			5		
			9		
		-25	10		
Brown Fine to Coarse SAND, Trace Silt and Gravel	394.40		5		
			10		
			14		
			7		
			9		
		-30	13		
Brown Fine SAND, Trace Silt	389.40		5		
			9		
			10		
Gray Fine SAND, Trace Silt	386.90		6		
			8		
		-35	10		
Gray Fine to Medium SAND, Trace Silt and Gravel	384.40		6		
			9		
			9		
			5		
			10		
		-40	11		

The Unconfined Compressive Strength (UCS) Failure Mode is indicated by (B-Bulge, S-Shear, P-Penetrometer)
The SPT (N value) is the sum of the last two blow values in each sampling zone (AASHTO T206)

BBS, from 137 (Rev. 8-99)

Illinois Department of Transportation
Division of Highways
Kaskaskia Engineering Group

SOIL BORING LOG

Page 2 of 2

Date 6/29/10

ROUTE I-270 DESCRIPTION I-270 CORC Retaining Wall LOGGED BY IK

SECTION 60-1B-1 LOCATION SEC.29, TWP. 4N, RNG. 9W, PM

COUNTY Madison DRILLING METHOD HSA/Mud Rotary HAMMER TYPE Automatic

STRUCT. NO.
Station

BORING NO. RT-8
Station 3+50
Offset 0.00ft
Ground Surface Elev. 420.4 ft

Surface Water Elev. ft
Stream Bed Elev. ft

Groundwater Elev.:
First Encounter 412.4 ft ▼
Upon Completion N/A ft
After N/A Hrs. N/A ft

Description	Elev.	DEPTH (ft)	BLOWS (/6")	UCS Qu (tsf)	MOIST (%)
Gray Fine to Medium SAND, Trace Silt and Gravel *(continued)*	379.40				
Gray Fine to Coarse SAND, Trace Silt			7		
			6		
			6		
Gray Fine to Coarse SAND, Trace Silt and Gravel	376.90		9		
			14		
		-45	12		
Gray Fine SAND, Trace Silt	374.40		10		
			16		
			19		
Gray Fine SAND, Trace Silt and Gravel	371.90		7		
			9		
		-50	13		
Gray Fine to Coarse SAND, Trace Silt and Gravel	366.90		11		
			10		
		-55	12		
Gray Fine to Medium SAND, Trace Silt and Gravel	361.90		15		
			25		
		-60	25		
Gray Fine to Medium SAND, Trace Silt *(continued)*	356.90				
Gray Fine to Coarse SAND, with Gravel, Trace Silt			4		
			7		
		-65	9		
Gray Fine to Coarse SAND, Trace Silt and Gravel	351.90		13		
			16		
		-70	19		
			7		
			11		
	345.40	-75	15		

The Unconfined Compressive Strength (UCS) Failure Mode is indicated by (B-Bulge, S-Shear, P-Penetrometer)
The SPT (N value) is the sum of the last two blow values in each sampling zone (AASHTO T206)

BBS, from 137 (Rev. 8-99)

McDonough Associates Inc.
Engineers / Architects
130 East Randolph Street Chicago, Illinois 60601

FILE NAME = 060W008-76A91-011-Soil_Borings.dgn	USER NAME = jehrhart	DESIGNED - JCE	REVISED -
		CHECKED - PMH	REVISED -
	PLOT SCALE = 1:0.0833333	DRAWN - AMV	REVISED -
	PLOT DATE = 3/18/11	CHECKED - JCE	REVISED -

STATE OF ILLINOIS
DEPARTMENT OF TRANSPORTATION

SOIL BORING LOGS
STRUCTURE NO. 060-W008

SHEET NO. 11 OF 19 SHEETS

F.A.I. RTE.	SECTION	COUNTY	TOTAL SHEETS	SHEET NO.
270	60-1B-1	MADISON	712	523
		CONTRACT NO. 76A91		
		ILLINOIS FED. AID PROJECT		

Illinois Department of Transportation
Division of Highways
Kaskaskia Engineering Group

SOIL BORING LOG

Page 1 of 2

Date 6/30/10

ROUTE I-270 DESCRIPTION I-270 CORC Retaining Wall LOGGED BY IK

SECTION 60-1B-1 LOCATION SEC.29, TWP. 4N, RNG. 9W, PM

COUNTY Madison DRILLING METHOD HSA/Mud Rotary HAMMER TYPE Automatic

STRUCT. NO.
Station

BORING NO. RT-9
Station 4+00
Offset 0.00ft
Ground Surface Elev. 419.8 ft

Surface Water Elev. ft
Stream Bed Elev. ft

Groundwater Elev.:
First Encounter 409.8 ft ▼
Upon Completion N/A ft
After N/A Hrs. N/A ft

DEPTH (ft)	BLOWS (/6")	UCS Qu (tsf)	MOIST (%)
TOPSOIL 418.76			
Brown SANDY SILT	2		
	4		18
	5		
	1		
	3		28
-5	2		
414.26 Gray-brown Fat CLAY Wet Density=114.3pcf, Dry Density=85.0pcf Liquid Limit=68, Plastic Limit=26, Plastic Index=42			
	ST	0.8 S	35
411.76 Brown Fine to Medium SAND, with Silt	1		
	1		28
▼-10	2		
	4		
	4		24
	7		
406.76 Gray-brown Lean CLAY, with Sand	3		
	5		25
-15	5		
403.26 Gray-brown SANDY SILT	3		
	4		29
	9		
401.76 Brown Fine to Medium SAND, Trace Silt	3		
	4		
-20	7		

DEPTH (ft)	BLOWS (/6")	UCS Qu (tsf)	MOIST (%)
Brown Fine to Medium SAND, Trace Silt *(continued)*			
	5		
	7		
	11		
	6		
	8		
-25	10		
	11		
	16		
	14		
391.26 Brown Fine to Coarse SAND, Trace Silt and Gravel	7		
	12		
-30	19		
388.76 Brown Fine to Medium SAND, Trace Silt	4		
	5		
	10		
386.26 Gray Fine SAND, Trace Silt	7		
	15		
-35	19		
	6		
Sand = 99.0%, Silt/CL = 1.0%, Gravel = 0.0%	9		
	10		
381.26 Gray Fine to Coarse SAND, Trace Silt	7		
	10		
-40	16		

The Unconfined Compressive Strength (UCS) Failure Mode is indicated by (B-Bulge, S-Shear, P-Penetrometer)
The SPT (N value) is the sum of the last two blow values in each sampling zone (AASHTO T206)

BBS, from 137 (Rev. 8-99)

Illinois Department of Transportation
Division of Highways
Kaskaskia Engineering Group

SOIL BORING LOG

Page 2 of 2

Date 6/30/10

ROUTE I-270 DESCRIPTION I-270 CORC Retaining Wall LOGGED BY IK

SECTION 60-1B-1 LOCATION SEC.29, TWP. 4N, RNG. 9W, PM

COUNTY Madison DRILLING METHOD HSA/Mud Rotary HAMMER TYPE Automatic

STRUCT. NO.
Station

BORING NO. RT-9
Station 4+00
Offset 0.00ft
Ground Surface Elev. 419.8 ft

Surface Water Elev. ft
Stream Bed Elev. ft

Groundwater Elev.:
First Encounter 409.8 ft ▼
Upon Completion N/A ft
After N/A Hrs. N/A ft

DEPTH (ft)	BLOWS (/6")	UCS Qu (tsf)	MOIST (%)
Gray Fine to Coarse SAND, Trace Silt *(continued)* 378.79			
Gray Fine to Medium SAND, Trace Silt	7		
	12		
	11		
	8		
	15		
-45	23		
	15		
	17		
	17		
	10		
	11		
-50	17		
366.29 Gray Fine to Coarse SAND, Trace Silt and Gravel	12		
	17		
-55	23		
361.28 Gray Fine to Medium SAND, Trace Silt	13		
	14		
-60	25		

DEPTH (ft)	BLOWS (/6")	UCS Qu (tsf)	MOIST (%)
Gray Fine to Medium SAND, Trace Silt *(continued)*			
358.28 Gray Fine to Coarse SAND, with Gravel	7		
	7		
-65	9		
	8		
	10		
-70	11		
348.28 Gray Fine to Coarse SAND, Trace Gravel	9		
	10		
344.76 -75	14		
-80			

The Unconfined Compressive Strength (UCS) Failure Mode is indicated by (B-Bulge, S-Shear, P-Penetrometer)
The SPT (N value) is the sum of the last two blow values in each sampling zone (AASHTO T206)

BBS, from 137 (Rev. 8-99)

Illinois Department of Transportation
Division of Highways
Kaskaskia Engineering Group

SOIL BORING LOG

Page 1 of 2

Date 6/30/10

ROUTE I-270 DESCRIPTION I-270 CORC Retaining Wall LOGGED BY IK

SECTION 60-1B-1 LOCATION SEC.29, TWP. 4N, RNG. 9W, PM

COUNTY Madison DRILLING METHOD HSA/Mud Rotary HAMMER TYPE Automatic

STRUCT. NO.
Station

BORING NO. RT-10
Station 4+50
Offset 0.00ft
Ground Surface Elev. 419.3 ft

Surface Water Elev. ft
Stream Bed Elev. ft

Groundwater Elev.:
First Encounter 410.8 ft ▼
Upon Completion N/A ft
After N/A Hrs. N/A ft

DEPTH (ft)	BLOWS (/6")	UCS Qu (tsf)	MOIST (%)
TOPSOIL 418.30			
Brown SANDY SILT	2		
	3		25
	3		
415.80 Gray-brown Lean CLAY, Trace Sand	WH		
	1		33
-5	1		
413.30 Brown Fine SAND, with Silt			
	ST	0.3 S	31
412.30 Brown SANDY SILT			
411.80 Gray-brown Lean CLAY Wet Density=116.3pcf, Dry Density=89.1pcf			
411.30 Brown SILTY SAND	1		
	2		30
-10	2		
408.80 Brown Fine to Medium SAND, with Silt	9		
	10		21
	16		
	4		
	4		
-15	4		
403.30 Gray Fine to Medium SAND, Trace Silt	3		
	3		
Sand=98.6%, Silt/CL=1.4%, Gravel=0.0% Stress = 0.3tsf	6		
400.80 Brown Fine to Medium SAND, Trace Silt and Gravel	5		
	8		
-20	9		

DEPTH (ft)	BLOWS (/6")	UCS Qu (tsf)	MOIST (%)
Brown Fine to Medium SAND, Trace Silt and Gravel *(continued)* 398.30 Brown Fine to Medium SAND, with Silt	9		
	10		
	11		
	6		
	4		
-25	7		
393.30 Brown Fine to Coarse SAND, with Silt	6		
	12		
	14		
390.80 Brown Fine to Medium SAND, with Silt	6		
	10		
-30	13		
388.30 Gray Fine to Coarse SAND, Trace Silt	6		
	10		
	15		
	5		
	7		
-35	9		
383.30 Gray Fine to Medium SAND, Trace Silt	6		
	8		
	14		
	6		
	10		
-40	10		

The Unconfined Compressive Strength (UCS) Failure Mode is indicated by (B-Bulge, S-Shear, P-Penetrometer)
The SPT (N value) is the sum of the last two blow values in each sampling zone (AASHTO T206)

BBS, from 137 (Rev. 8-99)

Illinois Department of Transportation
Division of Highways
Kaskaskia Engineering Group

SOIL BORING LOG

Page 2 of 2

Date 6/30/10

ROUTE I-270 DESCRIPTION I-270 CORC Retaining Wall LOGGED BY IK

SECTION 60-1B-1 LOCATION SEC.29, TWP. 4N, RNG. 9W, PM

COUNTY Madison DRILLING METHOD HSA/Mud Rotary HAMMER TYPE Automatic

STRUCT. NO.
Station

BORING NO. RT-10
Station 4+50
Offset 0.00ft
Ground Surface Elev. 419.3 ft

Surface Water Elev. ft
Stream Bed Elev. ft

Groundwater Elev.:
First Encounter 410.8 ft ▼
Upon Completion N/A ft
After N/A Hrs. N/A ft

DEPTH (ft)	BLOWS (/6")	UCS Qu (tsf)	MOIST (%)
Gray Fine to Medium SAND, Trace Silt *(continued)* 378.30			
Gray Fine to Coarse SAND, Trace Silt	7		
	7		
	13		
	8		
	13		
-45	16		
373.30 Gray Fine to Medium SAND, Trace Silt	9		
	14		
	19		
370.80 Gray Fine to Coarse SAND, Trace Silt	11		
	18		
-50	13		
	10		
	20		
-55	21		
350.80 Gray Fine to Medium SAND, Trace Silt	5		
	15		
-60	24		

DEPTH (ft)	BLOWS (/6")	UCS Qu (tsf)	MOIST (%)
Gray Fine to Medium SAND, Trace Silt *(continued)*			
	8		
355.80 Gray Fine to Coarse SAND, with Gravel	11		
	9		
-65	9		
	8		
	9		
-70	9		
	11		
	11		
344.30 -75	9		
-80			

The Unconfined Compressive Strength (UCS) Failure Mode is indicated by (B-Bulge, S-Shear, P-Penetrometer)
The SPT (N value) is the sum of the last two blow values in each sampling zone (AASHTO T206)

BBS, from 137 (Rev. 8-99)

McDonough Associates Inc.
Engineers / Architects
130 East Randolph Street Chicago, Illinois 60601

FILE NAME = 060W008-76A91-012-Soil_Borings.dgn	USER NAME = jehrhart	DESIGNED - JCE	REVISED -
		CHECKED - PMH	REVISED -
	PLOT SCALE = 1:0.0833333	DRAWN - AMV	REVISED -
	PLOT DATE = 3/18/11	CHECKED - JCE	REVISED -

STATE OF ILLINOIS
DEPARTMENT OF TRANSPORTATION

SOIL BORING LOGS
STRUCTURE NO. 060-W008
SHEET NO. 12 OF 19 SHEETS

F.A.I. RTE.	SECTION	COUNTY	TOTAL SHEETS	SHEET NO.
270	60-1B-1	MADISON	712	524
		CONTRACT NO. 76A91		
		ILLINOIS FED. AID PROJECT		

Illinois Department of Transportation
Division of Highways
Kankakee Engineering Group

SOIL BORING LOG

Page 1 of 2

Date 7/1/10

ROUTE I-270 DESCRIPTION I-270 CORC Retaining Wall LOGGED BY IK

SECTION 60-1B-1 LOCATION SEC.29, TWP. 4N, RNG. 9W, PM

COUNTY Madison DRILLING METHOD HSA/Mud Rotary HAMMER TYPE Automatic

STRUCT. NO.
Station

BORING NO. RT-11
Station 5+00
Offset 25.00ft South
Ground Surface Elev. 420.2 ft

Surface Water Elev. ft
Stream Bed Elev. ft

Groundwater Elev.:
First Encounter 412.7 ft ▼
Upon Completion N/A ft
After N/A Hrs. N/A ft

DEPTH (ft)	BLOWS (/6")	UCS Qu (tsf)	MOIST (%)
TOPSOIL			
419.21			
Brown SANDY SILT	4		
	3	1.5 P	16
	4		
416.21			
Brown Fat CLAY	ST	0.6	28
Wet Density=117.2pcf, Dry Density=91.4pcf		S	
-5			
414.71			
Brown SILTY SAND	1		
	1		34
▼	2		
412.21			
Brown Fine SAND, with Silt	2		
	5		
-10	5		
409.21			
Brown Fine to Medium SAND, with Silt	5		
	5		
	6		
	3		
	5		
-15	7		
	3		
	6		
	8		
	6		
	7		
-20	8		
Brown Fine to Medium SAND, with Silt (continued)	6		
	10		
	9		
396.71			
Brown Fine to Medium SAND, with Silt, Trace Gravel	2		
	5		
-25	10		
394.21			
Brown Fine to Coarse SAND, Trace Silt	7		
	11		
	12		
391.71			
Brown Fine to Medium SAND, Trace Silt and Gravel Sand=93.7%, Silt/CL=4.9%, Gravel=1.4%	1		
	2		
-30	3		
386.71			
Gray Fine to Medium SAND, Trace Silt	11		
	12		
-35	19		
	7		
	6		
	10		
	6		
	13		
-40	14		

The Unconfined Compressive Strength (UCS) Failure Mode is indicated by (B-Bulge, S-Shear, P-Penetrometer)
The SPT (N value) is the sum of the last two blow values in each sampling zone (AASHTO T206)

BBS, from 137 (Rev. 8-99)

Illinois Department of Transportation
Division of Highways
Kankakee Engineering Group

SOIL BORING LOG

Page 2 of 2

Date 7/1/10

ROUTE I-270 DESCRIPTION I-270 CORC Retaining Wall LOGGED BY IK

SECTION 60-1B-1 LOCATION SEC.29, TWP. 4N, RNG. 9W, PM

COUNTY Madison DRILLING METHOD HSA/Mud Rotary HAMMER TYPE Automatic

STRUCT. NO.
Station

BORING NO. RT-11
Station 5+00
Offset 25.00ft South
Ground Surface Elev. 420.2 ft

Surface Water Elev. ft
Stream Bed Elev. ft

Groundwater Elev.:
First Encounter 412.7 ft ▼
Upon Completion N/A ft
After N/A Hrs. N/A ft

DEPTH (ft)	BLOWS (/6")	UCS Qu (tsf)	MOIST (%)
Gray Fine to Medium SAND, Trace Silt (continued)			
	8		
	9		
	11		
	6		
	9		
-45	17		
	9		
	10		
	16		
371.71			
Gray Fine to Coarse SAND, Trace Silt	4		
	5		
-50	10		
366.71			
Gray Fine to Medium SAND, Trace Silt and Gravel	10		
	15		
-55	21		
361.71			
Gray Fine to Coarse SAND, Trace Gravel	11		
	21		
-60	22		
Gray Fine to Coarse SAND, Trace Gravel (continued)			
358.71			
Gray Fine to Coarse SAND, with Silt and Gravel	10		
	4		
-65	11		
351.71			
Gray Fine to Coarse SAND, Trace Gravel	6		
	11		
-70	15		
345.21			
	10		
	12		
-75	13		
-80			

The Unconfined Compressive Strength (UCS) Failure Mode is indicated by (B-Bulge, S-Shear, P-Penetrometer)
The SPT (N value) is the sum of the last two blow values in each sampling zone (AASHTO T206)

BBS, from 137 (Rev. 8-99)

Illinois Department of Transportation
Division of Highways
Kankakee Engineering Group

SOIL BORING LOG

Page 1 of 2

Date 7/2/10

ROUTE I-270 DESCRIPTION I-270 CORC Retaining Wall LOGGED BY AC

SECTION 60-1B-1 LOCATION SEC.29, TWP. 4N, RNG. 9W, PM

COUNTY Madison DRILLING METHOD HSA/Mud Rotary HAMMER TYPE Automatic

STRUCT. NO.
Station

BORING NO. RT-12
Station 5+50
Offset 0.00ft
Ground Surface Elev. 417.9 ft

Surface Water Elev. ft
Stream Bed Elev. ft

Groundwater Elev.:
First Encounter 409.4 ft ▼
Upon Completion N/A ft
After N/A Hrs. N/A ft

DEPTH (ft)	BLOWS (/6")	UCS Qu (tsf)	MOIST (%)
Forrest Soil			
416.93			
Gray-brown SANDY SILT	5		
	5		20
	6		
414.43			
Brown Fat CLAY	2		
	2	1.5 P	35
-5	2		
411.93			
Brown SILTY SAND	1		
	2		29
	3		
409.93			
Brown Fine to Medium SAND, with Silt ▼	WH		
	1		
-10	2		
	3		
	4		
	6		
	2		
	4		
-15	5		
	3		
	4		
	3		
399.43			
Brown Fine SAND, with Silt	3		
	5		
-20	7		
Brown Fine SAND, with Silt (continued)			
396.93			
Brown Fine to Medium SAND, with Silt	6		
	9		
	12		
394.43			
Brown Fine to Coarse SAND, Trace Silt	6		
	8		
-25	10		
391.93			
Brown Fine to Coarse SAND, with Silt	5		
	8		
	12		
389.43			
Brown Fine to Coarse SAND, Trace Silt	7		
	11		
-30	12		
386.93			
Brown Fine to Medium SAND, Trace Silt	5		
	4		
	7		
Sand=97.5%, Silt/CL=2.5%, Gravel=0.0%	3		
	4		
-35	6		
381.93			
Gray Fine to Coarse SAND, Trace Silt	3		
	4		
	7		
379.43			
Gray Fine to Coarse SAND, Trace Gravel	6		
	8		
-40	9		

The Unconfined Compressive Strength (UCS) Failure Mode is indicated by (B-Bulge, S-Shear, P-Penetrometer)
The SPT (N value) is the sum of the last two blow values in each sampling zone (AASHTO T206)

BBS, from 137 (Rev. 8-99)

Illinois Department of Transportation
Division of Highways
Kankakee Engineering Group

SOIL BORING LOG

Page 2 of 2

Date 7/2/10

ROUTE I-270 DESCRIPTION I-270 CORC Retaining Wall LOGGED BY AC

SECTION 60-1B-1 LOCATION SEC.29, TWP. 4N, RNG. 9W, PM

COUNTY Madison DRILLING METHOD HSA/Mud Rotary HAMMER TYPE Automatic

STRUCT. NO.
Station

BORING NO. RT-12
Station 5+50
Offset 0.00ft
Ground Surface Elev. 417.9 ft

Surface Water Elev. ft
Stream Bed Elev. ft

Groundwater Elev.:
First Encounter 409.4 ft ▼
Upon Completion N/A ft
After N/A Hrs. N/A ft

DEPTH (ft)	BLOWS (/6")	UCS Qu (tsf)	MOIST (%)
Gray Fine to Coarse SAND, Trace Gravel (continued)			
	4		
	8		
	8		
374.43			
Gray Fine to Medium SAND, Trace Silt	5		
	8		
-45	8		
	5		
	11		
	25		
369.43			
Gray Fine to Coarse SAND, Trace Silt	4		
	10		
-50	15		
364.43			
Gray Fine to Coarse SAND, Trace Gravel	5		
	10		
-55	10		
359.43			
Gray Fine to Coarse SAND	8		
	8		
-60	16		
Gray Fine to Coarse SAND (continued)			
354.43			
Gray Fine to Coarse SAND, with Gravel	8		
	11		
-65	11		
349.43			
Brown Fine to Medium SAND, Trace Gravel	13		
	11		
-70	13		
344.43			
Gray Fine to Coarse SAND, with Gravel	16		
	18		
342.93			
-75	19		
-80			

The Unconfined Compressive Strength (UCS) Failure Mode is indicated by (B-Bulge, S-Shear, P-Penetrometer)
The SPT (N value) is the sum of the last two blow values in each sampling zone (AASHTO T206)

BBS, from 137 (Rev. 8-99)

McDonough Associates Inc.
Engineers / Architects
130 East Randolph Street Chicago, Illinois 60601

FILE NAME = 060W008-76A91-013-Soil_Borings.dgn	USER NAME = jehrhart	DESIGNED - JCE	REVISED -
		CHECKED - PMH	REVISED -
	PLOT SCALE = 1:0.0833333	DRAWN - AMV	REVISED -
	PLOT DATE = 3/18/11	CHECKED - JCE	REVISED -

STATE OF ILLINOIS
DEPARTMENT OF TRANSPORTATION

SOIL BORING LOGS
STRUCTURE NO. 060-W008
SHEET NO. 13 OF 19 SHEETS

F.A.I. RTE.	SECTION	COUNTY	TOTAL SHEETS	SHEET NO.
270	60-1B-1	MADISON	712	525
		CONTRACT NO. 76A91		
		ILLINOIS FED. AID PROJECT		

Illinois Department of Transportation
Division of Highways
Keskaskia Engineering Group

SOIL BORING LOG

Page 1 of 2

Date 7/2/10

ROUTE I-270 DESCRIPTION I-270 CORC Retaining Wall LOGGED BY AC

SECTION 60-1B-1 LOCATION SEC.29, TWP. 4N, RNG. 9W, PM

COUNTY Madison DRILLING METHOD HSA/Mud Rotary HAMMER TYPE Automatic

STRUCT. NO.
Station

BORING NO. RT-13
Station 5+97
Offset 8.00ft left
Ground Surface Elev. 417.6 ft

Surface Water Elev. ft
Stream Bed Elev. ft

Groundwater Elev.:
First Encounter 409.1 ft ▼
Upon Completion N/A ft
After N/A Hrs. N/A ft

Description	Elev.	DEPTH (ft)	BLOWS (/6")	UCS Qu (tsf)	MOIST (%)
Forrest Soil	418.61				
Brown SILT, Trace Sand			3		
			4		22
			5		
Wet Density=115.0pcf, Dry Density=77.9pcf Sand=1%, Silt/CL=99.0%, Gravel=0.0%			ST	0.9 B	48
		5			
Brown Fat CLAY	411.61		1		
			2	1.75 P	35
			3		
Brown CLAYEY SAND ▼	409.11		1		
			4		32
		10	7		
Brown Fine to Medium SAND, Trace Silt	406.61		5		
			7		
			9		
			5		
			7		
		15	9		
			4		
			6		
			8		
			3		
			5		
		20	10		
Brown Fine to Medium SAND, Trace Silt *(continued)*	396.61				
Brown Fine to Medium SAND, with Silt Sand=92.8%, Silt/CL=7.2%, Gravel=0.0%			4		
			3		
			2		
			4		
			11		
		25	14		
Gray-brown Fine SAND, with Silt	391.61		3		
			3		
			4		
Gray Fine to Coarse SAND, Trace Gravel	389.11		4		
			8		
		30	15		
Brown Fine to Medium SAND, Trace Gravel	386.61		4		
			8		
			11		
Gray Fine to Medium SAND, with Silt	384.11		4		
			6		
		35	7		
			2		
			4		
			7		
Gray Fine to Coarse SAND, Trace Gravel	379.11		4		
			6		
		40	7		

The Unconfined Compressive Strength (UCS) Failure Mode is indicated by (B-Bulge, S-Shear, P-Penetrometer)
The SPT (N value) is the sum of the last two blow values in each sampling zone (AASHTO T206)

BBS, from 137 (Rev. 8-99)

Illinois Department of Transportation
Division of Highways
Keskaskia Engineering Group

SOIL BORING LOG

Page 2 of 2

Date 7/2/10

ROUTE I-270 DESCRIPTION I-270 CORC Retaining Wall LOGGED BY AC

SECTION 60-1B-1 LOCATION SEC.29, TWP. 4N, RNG. 9W, PM

COUNTY Madison DRILLING METHOD HSA/Mud Rotary HAMMER TYPE Automatic

STRUCT. NO.
Station

BORING NO. RT-13
Station 5+97
Offset 8.00ft left
Ground Surface Elev. 417.6 ft

Surface Water Elev. ft
Stream Bed Elev. ft

Groundwater Elev.:
First Encounter 409.1 ft ▼
Upon Completion N/A ft
After N/A Hrs. N/A ft

Description	Elev.	DEPTH (ft)	BLOWS (/6")	UCS Qu (tsf)	MOIST (%)
Gray Fine to Coarse SAND, Trace Gravel *(continued)*			6		
			9		
			11		
Gray Fine to Medium SAND, Trace Gravel	374.11		6		
			8		
		45	19		
			7		
			15		
			18		
Gray Fine to Coarse SAND, Trace Silt	369.11		6		
			12		
		50	15		
Gray Fine to Coarse SAND, Trace Gravel	364.11		7		
			12		
		55	18		
Gray Fine to Coarse SAND	359.11		8		
			8		
		60	22		
Gray Fine to Coarse SAND *(continued)*					
Gray Fine to Coarse SAND, Trace Gravel	354.11		9		
			8		
		65	8		
			WH		
			WH		
		70	7		
Gray Fine to Coarse SAND, with Gravel	344.11		9		
			10		
		75	15		
	342.61				
		80			

The Unconfined Compressive Strength (UCS) Failure Mode is indicated by (B-Bulge, S-Shear, P-Penetrometer)
The SPT (N value) is the sum of the last two blow values in each sampling zone (AASHTO T206)

BBS, from 137 (Rev. 8-99)

Illinois Department of Transportation
Division of Highways
Keskaskia Engineering Group

SOIL BORING LOG

Page 1 of 2

Date 7/6/10

ROUTE I-270 DESCRIPTION I-270 CORC Retaining Wall LOGGED BY AOT

SECTION 60-1B-1 LOCATION SEC.29, TWP. 4N, RNG. 9W, PM

COUNTY Madison DRILLING METHOD HSA/Mud Rotary HAMMER TYPE Automatic

STRUCT. NO.
Station

BORING NO. RT-14
Station 6+50
Offset 0.00ft
Ground Surface Elev. 417.3 ft

Surface Water Elev. ft
Stream Bed Elev. ft

Groundwater Elev.:
First Encounter 408.8 ft ▼
Upon Completion N/A ft
After N/A Hrs. N/A ft

Description	Elev.	DEPTH (ft)	BLOWS (/6")	UCS Qu (tsf)	MOIST (%)
Forrest Soil	418.31				
Brown SANDY SILT			2		
			4		20
			5		
Brown Lean CLAY, Trace Sand	413.81		WH		
			2	1.5 P	29
		5	2		
Brown Fat CLAY	411.31		1		
Liquid Limit=65, Plastic Limit=28, Plastic Index=37 Wet Density=117.0pcf, Dry Density=85.4pcf			1	0.4	37
			3	B	
Brown SANDY SILT ▼	408.81		WH		
			1		
		10	2		
Brown Fine to Medium SAND, Trace Silt	406.31		4		
			5		
			6		
Brown Fine SAND, Trace Silt	403.81		2		
			4		
		15	4		
			3		
			3		
			5		
			3		
			10		
		20	9		
Brown Fine SAND, Trace Silt *(continued)*	396.31				
Brown Fine to Medium SAND, with Silt			3		
			6		
			11		
Gray Fine to Medium SAND, Trace Silt	393.81		4		
			8		
		25	5		
			5		
			9		
			14		
			2		
			5		
		30	6		
			6		
			8		
			8		
			4		
			5		
		35	6		
Gray Fine to Coarse SAND	381.31		5		
			9		
			11		
Gray Fine to Medium SAND, Trace Silt	378.81		5		
			7		
		40	10		

The Unconfined Compressive Strength (UCS) Failure Mode is indicated by (B-Bulge, S-Shear, P-Penetrometer)
The SPT (N value) is the sum of the last two blow values in each sampling zone (AASHTO T206)

BBS, from 137 (Rev. 8-99)

Illinois Department of Transportation
Division of Highways
Keskaskia Engineering Group

SOIL BORING LOG

Page 2 of 2

Date 7/6/10

ROUTE I-270 DESCRIPTION I-270 CORC Retaining Wall LOGGED BY AOT

SECTION 60-1B-1 LOCATION SEC.29, TWP. 4N, RNG. 9W, PM

COUNTY Madison DRILLING METHOD HSA/Mud Rotary HAMMER TYPE Automatic

STRUCT. NO.
Station

BORING NO. RT-14
Station 6+50
Offset 0.00ft
Ground Surface Elev. 417.3 ft

Surface Water Elev. ft
Stream Bed Elev. ft

Groundwater Elev.:
First Encounter 408.8 ft ▼
Upon Completion N/A ft
After N/A Hrs. N/A ft

Description	Elev.	DEPTH (ft)	BLOWS (/6")	UCS Qu (tsf)	MOIST (%)
Gray Fine to Medium SAND, Trace Silt *(continued)*					
Gray Fine to Coarse SAND, Trace Gravel	376.31		5		
			6		
			6		
Gray Fine to Medium SAND, Trace Gravel	373.81		5		
			11		
		45	9		
Gray Fine to Coarse SAND, Trace Silt Sand=97.4%, Silt/CL=2.6%, Gravel=0.0%	371.31		3		
			5		
			5		
			7		
			15		
		50	16		
			6		
			10		
		60	9		
Gray Fine to Coarse SAND, Trace Silt Sand=97.4%, Silt/CL=2.6%, Gravel=0.0% *(continued)*					
Gray Medium to Coarse SAND, with Gravel	353.81		7		
			9		
		65	8		
Gray-brown Fine to Coarse SAND, Trace Gravel	348.81		7		
			11		
		70	13		
	344.81				
		75			
		80			

The Unconfined Compressive Strength (UCS) Failure Mode is indicated by (B-Bulge, S-Shear, P-Penetrometer)
The SPT (N value) is the sum of the last two blow values in each sampling zone (AASHTO T206)

BBS, from 137 (Rev. 8-99)

McDonough Associates Inc.
Engineers / Architects
130 East Randolph Street Chicago, Illinois 60601

FILE NAME = 060W008-76A91-014-Soil_Borings.dgn	USER NAME = jehrhart	DESIGNED - JCE	REVISED -	STATE OF ILLINOIS DEPARTMENT OF TRANSPORTATION	SOIL BORING LOGS STRUCTURE NO. 060-W008	F.A.I. RTE.	SECTION	COUNTY	TOTAL SHEETS / SHEET NO.
		CHECKED - PMH	REVISED -			270	60-1B-1	MADISON	712 / 526
	PLOT SCALE = 1:0.0833333	DRAWN - AMV	REVISED -					CONTRACT NO. 76A91	
	PLOT DATE = 3/18/11	CHECKED - JCE	REVISED -		SHEET NO. 14 OF 19 SHEETS		ILLINOIS	FED. AID PROJECT	

Illinois Department of Transportation
Division of Highways
Kaskaskia Engineering Group

SOIL BORING LOG

Page 1 of 2

Date 7/7/10

ROUTE I-270 DESCRIPTION I-270 CORC Retaining Wall LOGGED BY AOT

SECTION 60-1B-1 LOCATION SEC.29, TWP. 4N, RNG. 9W, PM

COUNTY Madison DRILLING METHOD HSA/Mud Rotary HAMMER TYPE Automatic

STRUCT. NO.
Station

BORING NO. RT-15
Station 7+00
Offset 25.00ft
Ground Surface Elev. 418.2 ft

Surface Water Elev. ft
Stream Bed Elev. ft

Groundwater Elev.:
First Encounter 409.7 ft ▼
Upon Completion N/A ft
After N/A Hrs. N/A ft

Description	Elev.	DEPTH (ft)	BLOWS (/6")	UCS Qu (tsf)	MOIST (%)
Brown SANDY SILT			2		
			3	1.0 P	18
			3		
Brown Fat CLAY, Trace roots	414.67				
Brown SANDY SILT Wet Density=115.0pcf, Dry Density=91.4pcf	414.17	-5	ST	1.1 S	26
Brown SILTY SAND	412.17		1		
			3		28
			3		
		▼	WH		
			1		
		-10	1		
Gray-brown SANDY SILT	407.17		1		
			2	0.5 P	34
			2		
Brown SILTY SAND Sand=76.5%, Silt/CL=23.5%, Gravel=0.0%	404.67		3		
			8		
		-15	8		
Brown Fine to Medium SAND, Trace Silt	402.17		5		
			7		
			8		
			5		
			7		
		-20	5		
Brown Fine to Medium SAND, Trace Silt (continued)	397.17		3		
			6		
			5		
Gray Fine to Medium SAND, Trace Silt			8		
			6		
		-25	8		
			9		
			12		
			15		
			4		
			7		
		-30	8		
Sand=96.5%, Silt=3.5%, Gravel=0.0%			4		
			6		
			8		
Gray Fine SAND, Trace Silt	384.67		4		
			4		
		-35	8		
Gray Fine to Medium SAND, Trace Silt	382.17		7		
			9		
			10		
Gray Fine to Coarse SAND	379.67		6		
			5		
		-40	7		

The Unconfined Compressive Strength (UCS) Failure Mode is indicated by (B-Bulge, S-Shear, P-Penetrometer)
The SPT (N value) is the sum of the last two blow values in each sampling zone (AASHTO T206)

BBS, from 137 (Rev. 8-99)

Illinois Department of Transportation
Division of Highways
Kaskaskia Engineering Group

SOIL BORING LOG

Page 2 of 2

Date 7/7/10

ROUTE I-270 DESCRIPTION I-270 CORC Retaining Wall LOGGED BY AOT

SECTION 60-1B-1 LOCATION SEC.29, TWP. 4N, RNG. 9W, PM

COUNTY Madison DRILLING METHOD HSA/Mud Rotary HAMMER TYPE Automatic

STRUCT. NO.
Station

BORING NO. RT-15
Station 7+00
Offset 25.00ft
Ground Surface Elev. 418.2 ft

Surface Water Elev. ft
Stream Bed Elev. ft

Groundwater Elev.:
First Encounter 409.7 ft ▼
Upon Completion N/A ft
After N/A Hrs. N/A ft

Description	Elev.	DEPTH (ft)	BLOWS (/6")	UCS Qu (tsf)	MOIST (%)
Gray Fine to Coarse SAND (continued)					
Gray Fine to Coarse SAND, Trace Gravel	372.17		3		
			5		
			8		
Gray Fine to Medium SAND	374.67		8		
			10		
		-45	13		
Gray Fine to Coarse SAND, Trace Gravel	372.17		3		
			5		
			10		
			4		
			6		
		-50	14		
Gray Medium to Coarse SAND, Trace Gravel	364.67		20		
			14		
		-55	12		
Gray Fine to Coarse SAND	359.67		6		
			12		
		-60	15		
Gray Fine to Coarse SAND (continued)					
Gray Fine to Coarse SAND, Trace Gravel	354.67		6		
			7		
		-65	13		
			13		
			12		
		-70	14		
Gray Fine to Coarse SAND, with Gravel	344.67		17		
			15		
	343.17	-75	21		
		-80			

The Unconfined Compressive Strength (UCS) Failure Mode is indicated by (B-Bulge, S-Shear, P-Penetrometer)
The SPT (N value) is the sum of the last two blow values in each sampling zone (AASHTO T206)

BBS, from 137 (Rev. 8-99)

Illinois Department of Transportation
Division of Highways
Kaskaskia Engineering Group

SOIL BORING LOG

Page 1 of 2

Date 7/7/10

ROUTE I-270 DESCRIPTION I-270 CORC Retaining Wall LOGGED BY AOT

SECTION 60-1B-1 LOCATION SEC.29, TWP. 4N, RNG. 9W, PM

COUNTY Madison DRILLING METHOD HSA/Mud Rotary HAMMER TYPE Automatic

STRUCT. NO.
Station

BORING NO. RT-16
Station 7+50
Offset 0.00ft
Ground Surface Elev. 417.6 ft

Surface Water Elev. ft
Stream Bed Elev. ft

Groundwater Elev.:
First Encounter 411.6 ft ▼
Upon Completion N/A ft
After N/A Hrs. N/A ft

Description	Elev.	DEPTH (ft)	BLOWS (/6")	UCS Qu (tsf)	MOIST (%)
Brown SANDY SILT			2		
			2	0.5 P	24
			2		
			2		
			1		28
		-5	3		
Brown SILTY SAND	413.62 ▼		1		
			2		32
			2		
			2		
			1		29
		-10	2		
			WH		
			1		38
			2		
			1		
			1		33
		-15	1		
Gray Lean CLAY, Trace Sand	401.62		3		
			3		33
			6		
Gray Fine to Medium SAND, Trace Silt	399.12		5		
			7		
		-20	9		
Gray Fine to Medium SAND, Trace Silt (continued)	396.62		3		
Gray-brown Fine to Medium SAND, Trace Silt Sand=98.4%, Silt=1.6%, Gravel=0.0%			3		
			4		
			7		*
			10		
		-25	12		
Gray Fine to Medium SAND, Trace Silt, Gravel	391.62		4		
			7		
			10		
Gray Fine SAND, with Silt	389.12		10		
			12		
		-30	14		
Gray Fine SAND	386.62		4		
			5		
			7		
			5		
			7		
		-35	8		
Gray Fine SAND, Trace Silt	381.62		4		
			7		
			14		
Gray Fine to Medium SAND, Trace Silt	379.12		6		
			10		
		-40	3		

The Unconfined Compressive Strength (UCS) Failure Mode is indicated by (B-Bulge, S-Shear, P-Penetrometer)
The SPT (N value) is the sum of the last two blow values in each sampling zone (AASHTO T206)

BBS, from 137 (Rev. 8-99)

Illinois Department of Transportation
Division of Highways
Kaskaskia Engineering Group

SOIL BORING LOG

Page 2 of 2

Date 7/7/10

ROUTE I-270 DESCRIPTION I-270 CORC Retaining Wall LOGGED BY AOT

SECTION 60-1B-1 LOCATION SEC.29, TWP. 4N, RNG. 9W, PM

COUNTY Madison DRILLING METHOD HSA/Mud Rotary HAMMER TYPE Automatic

STRUCT. NO.
Station

BORING NO. RT-16
Station 7+50
Offset 0.00ft
Ground Surface Elev. 417.6 ft

Surface Water Elev. ft
Stream Bed Elev. ft

Groundwater Elev.:
First Encounter 411.6 ft ▼
Upon Completion N/A ft
After N/A Hrs. N/A ft

Description	Elev.	DEPTH (ft)	BLOWS (/6")	UCS Qu (tsf)	MOIST (%)
Gray Fine to Medium SAND, Trace Silt (continued)					
Gray Fine SAND	378.62		8		
			10		
			13		
Gray Fine to Medium SAND	374.12		2		
			5		
		-45	10		
Gray Fine to Medium SAND, Trace Gravel	371.62		8		
			12		
			10		
Gray Fine to Coarse SAND, Trace Gravel	369.12		3		
			5		
		-50	5		
			4		
		-55	8		
			12		
Gray Medium to Coarse SAND	359.12		11		
			12		
		-60	15		
Gray Medium to Coarse SAND (continued)					
Gray Fine to Coarse SAND, Trace Gravel	354.12		9		
			11		
		-65	8		
Gray Fine to Coarse SAND, with Gravel	344.12		16		
			18		
	342.62	-70	15		
		-80			

The Unconfined Compressive Strength (UCS) Failure Mode is indicated by (B-Bulge, S-Shear, P-Penetrometer)
The SPT (N value) is the sum of the last two blow values in each sampling zone (AASHTO T206)

BBS, from 137 (Rev. 8-99)

McDonough Associates Inc.
Engineers / Architects
130 East Randolph Street Chicago, Illinois 60601

FILE NAME = 060W008-76A91-015-Soil_Borings.dgn	USER NAME = jehrhart	DESIGNED - JCE	REVISED -
		CHECKED - PMH	REVISED -
	PLOT SCALE = 1:0.0833333	DRAWN - AMV	REVISED -
	PLOT DATE = 3/18/11	CHECKED - JCE	REVISED -

STATE OF ILLINOIS
DEPARTMENT OF TRANSPORTATION

SOIL BORING LOGS
STRUCTURE NO. 060-W008
SHEET NO. 15 OF 19 SHEETS

F.A.I. RTE.	SECTION	COUNTY	TOTAL SHEETS	SHEET NO.
270	60-1B-1	MADISON	712	527
		CONTRACT NO. 76A91		
		ILLINOIS FED. AID PROJECT		

Illinois Department of Transportation
Division of Highways
Kaskaskia Engineering Group

SOIL BORING LOG

Page 1 of 2

Date 7/8/10

ROUTE I-270 DESCRIPTION I-270 CORC Retaining Wall LOGGED BY AOT

SECTION 60-1B-1 LOCATION SEC.29, TWP. 4N, RNG. 9W, PM

COUNTY Madison DRILLING METHOD HSA/Mud Rotary HAMMER TYPE Automatic

STRUCT. NO.
Station

BORING NO. RT-17
Station 8+50
Offset 0.00ft
Ground Surface Elev. 415.8 ft

Surface Water Elev. ft
Stream Bed Elev. ft

Groundwater Elev.:
First Encounter 408.8 ft ▼
Upon Completion N/A ft
After N/A Hrs. N/A ft

Description	Elev.	DEPTH (ft)	BLOWS (/6")	UCS Qu (tsf)	MOIST (%)
Brown Lean CLAY, Trace Sand			1		
			2	0.75	24
			2	P	
Brown SILT, with Sand Wet Density=118.3.0pcf, Dry Density=90.0pcf	411.78	-5		0.4	32
				B	
Gray SILT, Trace Sand	409.78		WH		
		▼	2		35
			2		
Gray SANDY SILT	407.28		1		
			1		38
		-10	1		
			1		
			1		31
			2		
Gray-brown SILTY SAND	402.28		1		
			2		30
		-15	2		
Brown Fine to Medium SAND, Trace Silt	399.78		4		
			5		
			8		
Sand=97.6%, Silt/CL=2.4%, Gravel=0.0%			3		
			3		
		-20	6		
Brown Fine to Medium SAND, Trace Silt *(continued)*	394.78		5		
Brown Fine to Medium SAND, with Silt			7		
			9		
Gray-brown Fine to Medium SAND, Trace Silt	392.28		4		
			7		
		-25	8		
Gray Fine to Medium SAND, Trace Silt	389.78		5		
			8		
			9		
Gray Fine SAND, Trace Silt	387.28		3		
			4		
		-30	4		
			7		
			8		
			7		
			4		
			6		
		-35	11		
			5		
			7		
			10		
Gray Fine SAND, with Gravel, Trace Silt	377.28		6		
			11		
		-40	13		

The Unconfined Compressive Strength (UCS) Failure Mode is indicated by (B-Bulge, S-Shear, P-Penetrometer)
The SPT (N value) is the sum of the last two blow values in each sampling zone (AASHTO T206)

BBS, from 137 (Rev. 8-99)

Illinois Department of Transportation
Division of Highways
Kaskaskia Engineering Group

SOIL BORING LOG

Page 2 of 2

Date 7/8/10

ROUTE I-270 DESCRIPTION I-270 CORC Retaining Wall LOGGED BY AOT

SECTION 60-1B-1 LOCATION SEC.29, TWP. 4N, RNG. 9W, PM

COUNTY Madison DRILLING METHOD HSA/Mud Rotary HAMMER TYPE Automatic

STRUCT. NO.
Station

BORING NO. RT-17
Station 8+50
Offset 0.00ft
Ground Surface Elev. 415.8 ft

Surface Water Elev. ft
Stream Bed Elev. ft

Groundwater Elev.:
First Encounter 408.8 ft ▼
Upon Completion N/A ft
After N/A Hrs. N/A ft

Description	Elev.	DEPTH (ft)	BLOWS (/6")	UCS Qu (tsf)	MOIST (%)
Gray Fine SAND, with Gravel, Trace Silt *(continued)*	374.78		4		
Gray Fine to Coarse SAND, Trace Gravel			11		
			12		
			6		
			7		
		-45	8		
Gray-brown Fine to Coarse SAND, with Gravel, Trace Silt Sand=79.2%, Silt/CL=3.0%, Gravel=17.8%	369.78		4		
			4		
			6		
Gray-brown Fine to Coarse SAND, with Silt, Gravel	367.28		8		
			6		
		-50	9		
Gray Fine to Coarse SAND	362.28		6		
			7		
		-55	9		
Gray Fine to Medium SAND, Trace Silt, Gravel	357.28		6		
			11		
		-60	13		
Gray Fine to Medium SAND, Trace Silt, Gravel *(continued)*			8		
Gray Fine to Coarse SAND, Trace Silt	352.28		10		
		-65	12		
Gray Fine to Medium SAND, with Gravel	347.28		9		
		-70	9		
Gray Fine to Coarse SAND, with Gravel	342.28		5		
			11		
	340.78	-75	8		
		-80			

The Unconfined Compressive Strength (UCS) Failure Mode is indicated by (B-Bulge, S-Shear, P-Penetrometer)
The SPT (N value) is the sum of the last two blow values in each sampling zone (AASHTO T206)

BBS, from 137 (Rev. 8-99)

Illinois Department of Transportation
Division of Highways
Kaskaskia Engineering Group

SOIL BORING LOG

Page 1 of 2

Date 7/16/10

ROUTE I-270 DESCRIPTION I-270 CORC Retaining Wall LOGGED BY AOT

SECTION 60-1B-1 LOCATION SEC.29, TWP. 4N, RNG. 9W, PM

COUNTY Madison DRILLING METHOD HSA/Mud Rotary HAMMER TYPE Automatic

STRUCT. NO.
Station

BORING NO. RT-18
Station 9+00
Offset 25.00ft Right
Ground Surface Elev. 416.0 ft

Surface Water Elev. ft
Stream Bed Elev. ft

Groundwater Elev.:
First Encounter 406.0 ft ▼
Upon Completion N/A ft
After N/A Hrs. N/A ft

Description	Elev.	DEPTH (ft)	BLOWS (/6")	UCS Qu (tsf)	MOIST (%)
Gray SANDY SILT			4		
			5		18
			9		
Gray Lean CLAY	412.49		7		
			4		23
		-5	5		
Gray-brown SILT, with Sand	409.99		1		
			1		34
			2		
Gray-brown SANDY SILT	407.49		WH		
			3		32
		▼-10	2		
			WH		
			3		22
			4		
Brown SILTY SAND	402.49		4		
			6		23
		-15	7		
Brown Fine to Medium SAND, Trace Silt	399.99		5		
			5		
			6		
Sand=98.4%, Silt/CL=1.6%, Gravel=0.0%			3		
			4		
		-20	6		
Brown Fine to Medium SAND, Trace Silt *(continued)*	394.99		5		
Brown Fine SAND, Trace Silt			6		
			9		
Gray Fine to Coarse SAND, with Silt	392.49		6		
			9		
		-25	8		
Gray Fine to Medium SAND, Trace Silt	389.99		8		
			7		
			8		
Gray Fine SAND, with Silt	387.49		4		
			6		
		-30	7		
			5		
			9		
			10		
			4		
			6		
		-35	11		
Gray Fine SAND, Trace Silt	379.99		3		
			7		
			11		
Gray Fine SAND, with Silt	377.49		7		
			7		
		-40	10		

The Unconfined Compressive Strength (UCS) Failure Mode is indicated by (B-Bulge, S-Shear, P-Penetrometer)
The SPT (N value) is the sum of the last two blow values in each sampling zone (AASHTO T206)

BBS, from 137 (Rev. 8-99)

Illinois Department of Transportation
Division of Highways
Kaskaskia Engineering Group

SOIL BORING LOG

Page 2 of 2

Date 7/16/10

ROUTE I-270 DESCRIPTION I-270 CORC Retaining Wall LOGGED BY AOT

SECTION 60-1B-1 LOCATION SEC.29, TWP. 4N, RNG. 9W, PM

COUNTY Madison DRILLING METHOD HSA/Mud Rotary HAMMER TYPE Automatic

STRUCT. NO.
Station

BORING NO. RT-18
Station 9+00
Offset 25.00ft Right
Ground Surface Elev. 416.0 ft

Surface Water Elev. ft
Stream Bed Elev. ft

Groundwater Elev.:
First Encounter 406.0 ft ▼
Upon Completion N/A ft
After N/A Hrs. N/A ft

Description	Elev.	DEPTH (ft)	BLOWS (/6")	UCS Qu (tsf)	MOIST (%)
Gray Fine SAND, with Silt *(continued)*	374.99		5		
Gray Fine to Coarse SAND, Trace Gravel			7		
			13		
Gray Fine to Coarse SAND, Trace Silt	372.49		5		
			9		
		-45	12		
Sand=98.7%, Silt/CL=1.3%, Gravel=0.0%			4		
			4		
			7		
Gray Medium to Coarse SAND, Trace Gravel	367.49		3		
			6		
		-50	8		
			3		
			6		
		-55	7		
Gray Medium SAND, Trace Gravel	357.49		5		
			7		
		-60	7		
Gray Medium SAND, Trace Gravel *(continued)*					
Gray Fine to Coarse SAND, Trace Gravel	352.49		6		
			11		
		-65	18		
Gray Fine to Medium SAND, with Gravel	342.49		6		
			12		
	340.99	-75	15		
		-80			

The Unconfined Compressive Strength (UCS) Failure Mode is indicated by (B-Bulge, S-Shear, P-Penetrometer)
The SPT (N value) is the sum of the last two blow values in each sampling zone (AASHTO T206)

BBS, from 137 (Rev. 8-99)

McDonough Associates Inc.
Engineers / Architects
130 East Randolph Street Chicago, Illinois 60601

FILE NAME = 060W008-76A91-016-Soil_Borings.dgn	USER NAME = jehrhart	DESIGNED - JCE	REVISED -	STATE OF ILLINOIS DEPARTMENT OF TRANSPORTATION	SOIL BORING LOGS STRUCTURE NO. 060-W008	F.A.I. RTE.	SECTION	COUNTY	TOTAL SHEETS / SHEET NO.
		CHECKED - PMH	REVISED -			270	60-1B-1	MADISON	712 / 528
	PLOT SCALE = 1:0.0833333	DRAWN - AMV	REVISED -					CONTRACT NO. 76A91	
	PLOT DATE = 3/18/11	CHECKED - JCE	REVISED -		SHEET NO. 16 OF 19 SHEETS			ILLINOIS FED. AID PROJECT	

Illinois Department of Transportation
Division of Highways
Kaskaskia Engineering Group

SOIL BORING LOG

Page 1 of 2

Date 7/9/10

ROUTE I-270 DESCRIPTION I-270 CORC Retaining Wall LOGGED BY AOT

SECTION 60-1B-1 LOCATION SEC.29, TWP. 4N, RNG. 9W., PM

COUNTY Madison DRILLING METHOD HSA/Mud Rotary HAMMER TYPE Automatic

STRUCT. NO.
Station

BORING NO. RT-19
Station 9+50
Offset 0.00ft
Ground Surface Elev. 415.7 ft

Surface Water Elev. ft
Stream Bed Elev. ft

Groundwater Elev.:
First Encounter 407.7 ft
Upon Completion N/A ft
After N/A Hrs. N/A ft

Description	Elev.	DEPTH (ft)	BLOWS (/6")	UCS Qu (tsf)	MOIST (%)
Brown Lean CLAY			WH		
			2		25
			2		
Brown SILTY SAND	412.19		2		
			2		39
		-5	1		
			1		
			3		32
			2		
Brown Fine SAND, with Silt	407.19		WH		
			3		26
		-10	1		
			WH		
			3		
			4		
Brown Fine to Coarse SAND	402.19		WH		
			2		
		-15	2		
Brown Fine to Coarse SAND, Trace Silt	399.69		3		
			4		
			7		
			7		
			8		
		-20	8		
Brown Coarse SAND, Trace Silt *(continued)*			3		
			6		
			6		
Gray Fine to Medium SAND, Trace Silt	392.19		6		
			4		
		-25	3		
Gray SILTY SAND, Sand=81.1%, Silt/CL=18.9%, Gravel=0.0%	389.69		2		
			2		
			3		
Gray Fine SAND, with Gravel, Trace Silt	387.19		3		
			4		
		-30	5		
Gray-brown Fine SAND, Trace Silt	384.69		5		
			6		
			11		
Gray-brown Fine to Medium SAND	382.19		5		
			8		
		-35	9		
Gray Fine to Medium SAND, Trace Silt, Gravel	379.69		7		
			11		
			18		
Gray Fine SAND, Trace Silt	377.19		7		
			11		
		-40	13		

The Unconfined Compressive Strength (UCS) Failure Mode is indicated by (B-Bulge, S-Shear, P-Penetrometer)
The SPT (N value) is the sum of the last two blow values in each sampling zone (AASHTO T206)

BBS, from 137 (Rev. 8-99)

Illinois Department of Transportation
Division of Highways
Kaskaskia Engineering Group

SOIL BORING LOG

Page 2 of 2

Date 7/9/10

ROUTE I-270 DESCRIPTION I-270 CORC Retaining Wall LOGGED BY AOT

SECTION 60-1B-1 LOCATION SEC.29, TWP. 4N, RNG. 9W., PM

COUNTY Madison DRILLING METHOD HSA/Mud Rotary HAMMER TYPE Automatic

STRUCT. NO.
Station

BORING NO. RT-19
Station 9+50
Offset 0.00ft
Ground Surface Elev. 415.7 ft

Surface Water Elev. ft
Stream Bed Elev. ft

Groundwater Elev.:
First Encounter 407.7 ft
Upon Completion N/A ft
After N/A Hrs. N/A ft

Description	Elev.	DEPTH (ft)	BLOWS (/6")	UCS Qu (tsf)	MOIST (%)
Gray Fine SAND, Trace Silt *(continued)*			5		
			13		
			19		
Gray Fine to Coarse SAND, Trace Gravel, Sand=97.7%, Silt/CL=1.7%, Gravel=0.6%	372.19		6		
			6		
		-45	5		
			3		
			4		
			5		
Gray Fine SAND, Trace Gravel	367.19		4		
			4		
		-50	3		
Gray Fine to Medium SAND, Trace Gravel	362.19		1		
			2		
		-55	6		
Gray Fine to Medium SAND, Trace Silt	357.19		5		
			6		
		-60	7		
Gray Fine to Medium SAND, Trace Silt *(continued)*					
Gray Fine to Medium SAND	352.19		8		
			8		
		-65	8		
Gray Medium to Coarse SAND, Trace Gravel			8		
			7		
		-70	10		
Gray Fine to Coarse SAND, with Gravel	342.19		7		
			8		
	340.69	-75	9		

The Unconfined Compressive Strength (UCS) Failure Mode is indicated by (B-Bulge, S-Shear, P-Penetrometer)
The SPT (N value) is the sum of the last two blow values in each sampling zone (AASHTO T206)

BBS, from 137 (Rev. 8-99)

Illinois Department of Transportation
Division of Highways
Kaskaskia Engineering Group

SOIL BORING LOG

Page 1 of 2

Date 7/12/10

ROUTE I-270 DESCRIPTION I-270 CORC Retaining Wall LOGGED BY AOT

SECTION 60-1B-1 LOCATION SEC.29, TWP. 4N, RNG. 9W., PM

COUNTY Madison DRILLING METHOD HSA/Mud Rotary HAMMER TYPE Automatic

STRUCT. NO.
Station

BORING NO. RT-20
Station 10+00
Offset 5.00ft East
Ground Surface Elev. 423.4 ft

Surface Water Elev. ft
Stream Bed Elev. ft

Groundwater Elev.:
First Encounter 405.9 ft
Upon Completion N/A ft
After N/A Hrs. N/A ft

Description	Elev.	DEPTH (ft)	BLOWS (/6")	UCS Qu (tsf)	MOIST (%)
Brown SANDY CLAY			3		
			4		19
			5		
Brown SANDY SILT	419.89		4		
			5		23
		-5	3		
Wet, Density=119.8pcf, Dry Density=102.1pcf			ST	0.8	17
				v	
Gray SANDY SILT	414.89		3		
			4		20
		-10	6		
Brown SANDY CLAY	412.39		7		
			7		23
			9		
Brown SILTY SAND	409.89		3		
			3		35
		-15	2		
Brown SILT, Trace Sand	407.39		2		
			2		35
			2		
Brown SANDY SILT	404.89		WH		
			1		37
		-20	3		
Brown SANDY SILT *(continued)*					
Brown SILTY SAND	402.39		3		
			6		24
			8		
Gray Fine to Coarse SAND, Trace Silt	399.89		5		
			6		
		-25	5		
Brown Fine to Coarse SAND, with Silt, Trace Gravel, Sand=91.8%, Silt/CL=7.3%, Gravel=0.8%	397.39		6		
			9		
			10		
Gray-brown Fine to Medium SAND, Trace Silt	394.89		3		
			5		
		-30	8		
Gray-brown Fine SAND, with Clay, Trace Gravel	392.39		6		
			10		
			14		
Gray Fine to Medium SAND, with Silt	389.89		9		
			11		
		-35	12		
Gray SANDY CLAY	387.39		1		
			5		24
			7		
Brown Fine SAND	384.89		3		
			10		
		-40	11		

The Unconfined Compressive Strength (UCS) Failure Mode is indicated by (B-Bulge, S-Shear, P-Penetrometer)
The SPT (N value) is the sum of the last two blow values in each sampling zone (AASHTO T206)

BBS, from 137 (Rev. 8-99)

Illinois Department of Transportation
Division of Highways
Kaskaskia Engineering Group

SOIL BORING LOG

Page 2 of 2

Date 7/12/10

ROUTE I-270 DESCRIPTION I-270 CORC Retaining Wall LOGGED BY AOT

SECTION 60-1B-1 LOCATION SEC.29, TWP. 4N, RNG. 9W., PM

COUNTY Madison DRILLING METHOD HSA/Mud Rotary HAMMER TYPE Automatic

STRUCT. NO.
Station

BORING NO. RT-20
Station 10+00
Offset 5.00ft East
Ground Surface Elev. 423.4 ft

Surface Water Elev. ft
Stream Bed Elev. ft

Groundwater Elev.:
First Encounter 405.9 ft
Upon Completion N/A ft
After N/A Hrs. N/A ft

Description	Elev.	DEPTH (ft)	BLOWS (/6")	UCS Qu (tsf)	MOIST (%)
Brown Fine SAND *(continued)*					
Brown Fine to Coarse SAND, Trace Silt, Gravel	382.39		5		
			4		
			6		
Gray Fine to Medium SAND, Trace Silt	379.89		8		
			10		
		-45	13		
			9		
			11		
			14		
			11		
			14		
		-50	25		
			8		
			9		
		-55	9		
Gray Medium SAND	364.89		8		
			8		
		-60	9		
Gray Medium SAND *(continued)*					
Gray Fine SAND, Trace Silt	359.89		5		
			7		
		-65	14		
Gray Medium to Coarse SAND, Trace Silt	354.89		6		
			9		
		-70	13		
Gray Fine to Coarse SAND, with Gravel	349.89		7		
			13		
	348.39	-75	11		

The Unconfined Compressive Strength (UCS) Failure Mode is indicated by (B-Bulge, S-Shear, P-Penetrometer)
The SPT (N value) is the sum of the last two blow values in each sampling zone (AASHTO T206)

BBS, from 137 (Rev. 8-99)

McDonough Associates Inc.
Engineers / Architects
130 East Randolph Street Chicago, Illinois 60601

FILE NAME = 060W008-76A91-017-Soil_Borings.dgn	USER NAME = jehrhart	DESIGNED - JCE	REVISED -	STATE OF ILLINOIS DEPARTMENT OF TRANSPORTATION	SOIL BORING LOGS STRUCTURE NO. 060-W008
		CHECKED - PMH	REVISED -		
	PLOT SCALE = 1:0.0833333	DRAWN - AMV	REVISED -		
	PLOT DATE = 3/18/11	CHECKED - JCE	REVISED -		SHEET NO. 17 OF 19 SHEETS

F.A.I. RTE.	SECTION	COUNTY	TOTAL SHEETS	SHEET NO.
270	60-1B-1	MADISON	712	529
		CONTRACT NO. 76A91		
		ILLINOIS FED. AID PROJECT		

Illinois Department of Transportation
Division of Highways
Kaskaskia Engineering Group

SOIL BORING LOG

Page 1 of 2

Date 7/13/10

ROUTE I-270 DESCRIPTION I-270 CORC Retaining Wall LOGGED BY AOT

SECTION 60-1B-1 LOCATION SEC.29, TWP. 4N, RNG. 9W, PM

COUNTY Madison DRILLING METHOD HSA/Mud Rotary HAMMER TYPE Automatic

STRUCT. NO.
Station

BORING NO. RT-21
Station 10+50
Offset 0.00ft
Ground Surface Elev. 426.4 ft

Surface Water Elev. ft
Stream Bed Elev. ft

Groundwater Elev.:
First Encounter 406.4 ft ▼
Upon Completion N/A ft
After N/A Hrs. N/A ft

Description	Elev.	DEPTH (ft)	BLOWS (/6")	UCS Qu (tsf)	MOIST (%)
Brown Fat CLAY, with Silt			3		
			4		18
			5		
Brown SANDY CLAY	422.91		4		
			6		16
		-5	6		
Brown SANDY SILT	420.41				
Gray-brown Fat CLAY Wet Density=114.3pcf, Dry Density=85.0pcf Liquid Limit=75, Plastic Limit=29, Plastic Index=46	418.91		ST	1.1 S	34
Brown SANDY CLAY	417.91		2		
			3		35
		-10	5		
Gray-brown SANDY SILT	415.41		4		
			6		24
			7		
Gray-brown Lean CLAY, Trace Sand	412.91		3		
			4		28
		-15	4		
Gray-brown SANDY SILT	410.41		WH		
			1		31
			2		
			WH		
			1		31
		▼-20	2		
Gray-brown SANDY SILT (continued)	405.41				
Brown SILTY SAND			3		
			1		39
			1		
			1		
			2		27
		-25	7		
Gray-brown Fine SAND, Trace Silt	400.41		4		
			7		
			7		
Brown Fine to Medium SAND, Trace Silt	397.91		8		
			14		
		-30	15		
			7		
			12		
			18		
Brown Fine to Medium SAND, Trace Silt, Gravel	392.91		10		
			10		
		-35	10		
Sand=96.2%, Silt/CL=2.6%, Gravel=1.4%			8		
			4		
			8		
Gray Fine to Medium SAND, Trace Silt	387.91		7		
			13		
		-40	15		

The Unconfined Compressive Strength (UCS) Failure Mode is indicated by (B-Bulge, S-Shear, P-Penetrometer)
The SPT (N value) is the sum of the last two blow values in each sampling zone (AASHTO T206)

BBS, from 137 (Rev. 8-99)

Illinois Department of Transportation
Division of Highways
Kaskaskia Engineering Group

SOIL BORING LOG

Page 2 of 2

Date 7/13/10

ROUTE I-270 DESCRIPTION I-270 CORC Retaining Wall LOGGED BY AOT

SECTION 60-1B-1 LOCATION SEC.29, TWP. 4N, RNG. 9W, PM

COUNTY Madison DRILLING METHOD HSA/Mud Rotary HAMMER TYPE Automatic

STRUCT. NO.
Station

BORING NO. RT-21
Station 10+50
Offset 0.00ft
Ground Surface Elev. 426.4 ft

Surface Water Elev. ft
Stream Bed Elev. ft

Groundwater Elev.:
First Encounter 406.4 ft ▼
Upon Completion N/A ft
After N/A Hrs. N/A ft

Description	Elev.	DEPTH (ft)	BLOWS (/6")	UCS Qu (tsf)	MOIST (%)
Gray Fine to Medium SAND, Trace Silt (continued)	385.41				
Gray Fine to Coarse SAND, Trace Gravel			5		
			7		
			8		
Gray Fine to Medium SAND	382.91		5		
			5		
		-45	9		
Gray Fine to Medium SAND, Trace Silt	380.41		8		
			15		
			22		
Gray Fine SAND, Trace Silt	377.91		7		
			12		
		-50	14		
Gray Fine to Medium SAND, Trace Silt	372.91		6		
			10		
		-55	15		
Gray Medium to Coarse SAND, Trace Silt	367.91		5		
			6		
		-60	5		
Gray Medium to Coarse SAND, Trace Silt (continued)					
Gray Fine to Coarse SAND, Trace Silt	362.91		7		
			9		
		-65	9		
			8		
			5		
		-70	8		
			8		
			11		
	351.41	-75	9		
		-80			

The Unconfined Compressive Strength (UCS) Failure Mode is indicated by (B-Bulge, S-Shear, P-Penetrometer)
The SPT (N value) is the sum of the last two blow values in each sampling zone (AASHTO T206)

BBS, from 137 (Rev. 8-99)

Illinois Department of Transportation
Division of Highways
Kaskaskia Engineering Group

SOIL BORING LOG

Page 1 of 2

Date 7/13/10

ROUTE I-270 DESCRIPTION I-270 CORC Retaining Wall LOGGED BY AOT

SECTION 60-1B-1 LOCATION SEC.29, TWP. 4N, RNG. 9W, PM

COUNTY Madison DRILLING METHOD HSA/Mud Rotary HAMMER TYPE Automatic

STRUCT. NO.
Station

BORING NO. RT-22
Station 11+00
Offset 25.00ft
Ground Surface Elev. 425.9 ft

Surface Water Elev. ft
Stream Bed Elev. ft

Groundwater Elev.:
First Encounter 407.9 ft ▼
Upon Completion N/A ft
After N/A Hrs. N/A ft

Description	Elev.	DEPTH (ft)	BLOWS (/6")	UCS Qu (tsf)	MOIST (%)
Brown SANDY SILT			3		
			4		17
			3		
Brown SANDY CLAY	422.35		4		
			3		14
		-5	2		
Brown SANDY SILT	419.85		2		
			1		14
			1		
Wet Density=99.4pcf, Dry Density=81.3pcf			ST	0.2 v	22
		-10			
Gray Lean CLAY	414.85		WH		
			1		36
			1		
Brown Fat CLAY	412.35		WH		
			1		34
		-15	1		
Gray SANDY SILT	409.85		WH		
			WH		32
			1		
Brown SILTY SAND Sand=68.6%, Silt/CL=31.4%, Gravel=0.0%	407.35		WH		
			1		
		-20	3		
Brown Fine SAND, with Silt	404.85		5		
			5		
			8		
Brown Fine SAND, Trace Silt	402.35		3		
			5		
		-25	9		
Gray Fine to Medium SAND, Trace Silt	399.85		6		
			6		
			8		
			3		
			3		
		-30	8		
Gray Fine to Coarse SAND	394.85		5		
			7		
			12		
Gray Fine SAND, Trace Gravel	392.35		7		
			10		
		-35	14		
			7		
			9		
			9		
Gray Fine to Medium SAND	387.35		6		
			9		
		-40	9		

The Unconfined Compressive Strength (UCS) Failure Mode is indicated by (B-Bulge, S-Shear, P-Penetrometer)
The SPT (N value) is the sum of the last two blow values in each sampling zone (AASHTO T206)

BBS, from 137 (Rev. 8-99)

Illinois Department of Transportation
Division of Highways
Kaskaskia Engineering Group

SOIL BORING LOG

Page 2 of 2

Date 7/13/10

ROUTE I-270 DESCRIPTION I-270 CORC Retaining Wall LOGGED BY AOT

SECTION 60-1B-1 LOCATION SEC.29, TWP. 4N, RNG. 9W, PM

COUNTY Madison DRILLING METHOD HSA/Mud Rotary HAMMER TYPE Automatic

STRUCT. NO.
Station

BORING NO. RT-22
Station 11+00
Offset 25.00ft
Ground Surface Elev. 425.9 ft

Surface Water Elev. ft
Stream Bed Elev. ft

Groundwater Elev.:
First Encounter 407.9 ft ▼
Upon Completion N/A ft
After N/A Hrs. N/A ft

Description	Elev.	DEPTH (ft)	BLOWS (/6")	UCS Qu (tsf)	MOIST (%)
Gray Fine to Medium SAND (continued)	384.85				
Gray Fine to Medium SAND, Trace Silt			4		
			6		
			12		
			7		
			8		
		-45	11		
Gray Fine SAND, Trace Silt	379.85		5		
			8		
			9		
			8		
			14		
		-50	16		
Gray-brown Fine to Medium SAND	372.35		5		
			5		
		-55	7		
Gray Fine to Coarse SAND	367.35		4		
			7		
		-60	6		
Gray Fine to Coarse SAND (continued)					
Gray Medium to Coarse SAND	362.35		7		
			9		
		-65	9		
			6		
			8		
Gray Medium to Coarse SAND, Trace Gravel	352.35		8		
			12		
	350.85	-75	16		
		-80			

The Unconfined Compressive Strength (UCS) Failure Mode is indicated by (B-Bulge, S-Shear, P-Penetrometer)
The SPT (N value) is the sum of the last two blow values in each sampling zone (AASHTO T206)

BBS, from 137 (Rev. 8-99)

McDonough Associates Inc.
Engineers / Architects
130 East Randolph Street, Chicago, Illinois 60601

FILE NAME = 060W008-76A91-018-Soil_Borings.dgn	USER NAME = jehrhart	DESIGNED - JCE	REVISED -
		CHECKED - PMH	REVISED -
	PLOT SCALE = 1:0.0833333	DRAWN - AMV	REVISED -
	PLOT DATE = 3/18/11	CHECKED - JCE	REVISED -

STATE OF ILLINOIS
DEPARTMENT OF TRANSPORTATION

SOIL BORING LOGS
STRUCTURE NO. 060-W008

SHEET NO. 18 OF 19 SHEETS

F.A.I. RTE.	SECTION	COUNTY	TOTAL SHEETS	SHEET NO.
270	60-1B-1	MADISON	712	530
		CONTRACT NO. 76A91		
		ILLINOIS FED. AID PROJECT		

Illinois Department of Transportation
Division of Highways
Kankakee Engineering Group

SOIL BORING LOG

Page 1 of 2

Date 7/14/10

ROUTE I-270 DESCRIPTION I-270 CORC Retaining Wall LOGGED BY AOT

SECTION 60-1B-1 LOCATION SEC.29, TWP. 4N, RNG. 9W, PM

COUNTY Madison DRILLING METHOD HSA/Mud Rotary HAMMER TYPE Automatic

STRUCT. NO.
Station

BORING NO. RT-23
Station 11+50
Offset 0.00ft
Ground Surface Elev. 420.0 ft

Surface Water Elev. ft
Stream Bed Elev. ft

Groundwater Elev.:
First Encounter 409.0 ft ▼
Upon Completion N/A ft
After N/A Hrs. N/A ft

Description	Elev.	DEPTH (ft)	BLOWS (/6")	UCS Qu (tsf)	MOIST (%)
Brown SANDY SILT			3		
			3		1709
			2		
			2		
			1		26
		-5	2		
Gray Fat CLAY Liquid Limit=50, Plastic Limit=23, Plastic Index=27	414.03		WH		
			2		36
			2		
Brown SILTY SAND	411.53		1		
			3		
		-10	3		
Brown Fine SAND	409.03 ▼		2		
			3		
			4		
Gray-brown SILTY SAND Sand=62.7%, Silt/CL=37.3%, Gravel=0.0%	406.53		WH		
			1		
		-15	1		
			3		
			7		
			8		
Brown Fine to Medium SAND, Trace Silt	401.53		5		
			8		
		-20	9		
Brown Fine to Medium SAND, Trace Silt *(continued)*	399.03		5		
			4		
			4		
Brown Fine to Coarse SAND, Trace Silt			6		
			12		
		-25	14		
Gray Fine to Medium SAND, Trace Gravel	394.03		7		
			9		
			10		
Gray Fine SAND, Trace Silt	391.53		2		
			4		
		-30	7		
Gray Fine to Medium SAND, Trace Gravel	389.03		6		
			11		
			12		
Gray Fine to Coarse SAND, Trace Silt, with Gravel Sand=93.0, Silt/CL=2.3, Gravel=4.71	386.53		5		
			7		
		-35	7		
Gray Fine to Coarse SAND, Trace Silt, Gravel	384.03		5		
			9		
			9		
Gray Fine to Medium SAND, Trace Gravel	381.53		7		
			7		
		-40	15		

The Unconfined Compressive Strength (UCS) Failure Mode is indicated by (B-Bulge, S-Shear, P-Penetrometer)
The SPT (N value) is the sum of the last two blow values in each sampling zone (AASHTO T206)

BBS, from 137 (Rev. 8-99)

Illinois Department of Transportation
Division of Highways
Kankakee Engineering Group

SOIL BORING LOG

Page 2 of 2

Date 7/14/10

ROUTE I-270 DESCRIPTION I-270 CORC Retaining Wall LOGGED BY AOT

SECTION 60-1B-1 LOCATION SEC.29, TWP. 4N, RNG. 9W, PM

COUNTY Madison DRILLING METHOD HSA/Mud Rotary HAMMER TYPE Automatic

STRUCT. NO.
Station

BORING NO. RT-23
Station 11+50
Offset 0.00ft
Ground Surface Elev. 420.0 ft

Surface Water Elev. ft
Stream Bed Elev. ft

Groundwater Elev.:
First Encounter 409.0 ft ▼
Upon Completion N/A ft
After N/A Hrs. N/A ft

Description	Elev.	DEPTH (ft)	BLOWS (/6")	UCS Qu (tsf)	MOIST (%)
Gray Fine to Medium SAND, Trace Gravel *(continued)*	379.03		5		
Gray Fine to Coarse SAND, Trace Gravel			9		
			11		
Gray Fine SAND	376.53		7		
			9		
		-45	12		
Gray Fine to Medium SAND	374.03		5		
			7		
			9		
Gray-brown Medium SAND	371.53		4		
			10		
		-50	9		
Gray Fine to Medium SAND	366.53		9		
			13		
		-55	15		
Gray Medium to Coarse SAND, Trace Gravel	361.53		8		
			8		
		-60	7		
Gray Medium to Coarse SAND, Trace Gravel *(continued)*					
Gray Fine to Medium SAND	356.53		7		
			8		
		-65	9		
Gray Fine to Coarse SAND, with Silt, Gravel	351.53		5		
			25		
		-70	23		
Gray Fine to Coarse SAND, Trace Gravel	346.53		4		
			4		
	345.03	-75	5		
		-80			

The Unconfined Compressive Strength (UCS) Failure Mode is indicated by (B-Bulge, S-Shear, P-Penetrometer)
The SPT (N value) is the sum of the last two blow values in each sampling zone (AASHTO T206)

BBS, from 137 (Rev. 8-99)

Illinois Department of Transportation
Division of Highways
Kankakee Engineering Group

SOIL BORING LOG

Page 1 of 2

Date 7/15/10

ROUTE I-270 DESCRIPTION I-270 CORC Retaining Wall LOGGED BY AOT

SECTION 60-1B-1 LOCATION SEC.29, TWP. 4N, RNG. 9W, PM

COUNTY Madison DRILLING METHOD HSA/Mud Rotary HAMMER TYPE Automatic

STRUCT. NO.
Station

BORING NO. RT-24
Station 12+00
Offset 0.00ft
Ground Surface Elev. 419.6 ft

Surface Water Elev. ft
Stream Bed Elev. ft

Groundwater Elev.:
First Encounter ft
Upon Completion ft
After Hrs. ft

Description	Elev.	DEPTH (ft)	BLOWS (/6")	UCS Qu (tsf)	MOIST (%)
Brown SANDY SILT			4		
			7		23
			6		
			3		
			3	0.75	27
		-5	2	P	
Brown Fat CLAY	413.57		1		
			1	0.75	37
			2	P	
Brown SILT, with SAND	411.07		WH		
			1		36
		-10	1		
			WH		
			WH		35
			1		
Brown SILTY SAND Sand=76.5%, Silt/CL=23.5%, Gravel=0.0%	406.07		2		
			3		33
		-15	3		
Brown Fine SAND, with Silt	403.57		3		
			4		
			8		
Brown Fine to Medium SAND, with Silt	401.07		1		
			5		
		-20	6		
Brown Fine to Medium SAND, with Silt *(continued)*	398.57		2		
Gray-brown Fine SAND, with Silt			6		
			8		
Gray Medium to Coarse SAND, Trace Silt	396.07		6		
			9		
		-25	9		
Gray Fine to Medium SAND, Trace Silt, Gravel	393.57		9		
			10		
			9		
Gray Fine to Coarse SAND, Trace Silt Sand=98.2%, Silt/CL=1.8%, Gravel=0.0%	391.07		2		
			4		
		-30	8		
			7		
			8		
			8		
Gray Fine to Coarse SAND, Trace Gravel	386.07		6		
			7		
		-35	4		
Gray Medium SAND	383.57		4		
			5		
			7		
Gray Fine SAND, Trace Silt	381.07		7		
			17		
		-40	12		

The Unconfined Compressive Strength (UCS) Failure Mode is indicated by (B-Bulge, S-Shear, P-Penetrometer)
The SPT (N value) is the sum of the last two blow values in each sampling zone (AASHTO T206)

BBS, from 137 (Rev. 8-99)

Illinois Department of Transportation
Division of Highways
Kankakee Engineering Group

SOIL BORING LOG

Page 2 of 2

Date 7/15/10

ROUTE I-270 DESCRIPTION I-270 CORC Retaining Wall LOGGED BY AOT

SECTION 60-1B-1 LOCATION SEC.29, TWP. 4N, RNG. 9W, PM

COUNTY Madison DRILLING METHOD HSA/Mud Rotary HAMMER TYPE Automatic

STRUCT. NO.
Station

BORING NO. RT-24
Station 12+00
Offset 0.00ft
Ground Surface Elev. 419.6 ft

Surface Water Elev. ft
Stream Bed Elev. ft

Groundwater Elev.:
First Encounter ft
Upon Completion ft
After Hrs. ft

Description	Elev.	DEPTH (ft)	BLOWS (/6")	UCS Qu (tsf)	MOIST (%)
Gray Fine SAND, Trace Silt *(continued)*	378.57		6		
Gray Fine to Medium SAND, Trace Silt			12		
			14		
Gray Medium to Coarse SAND, Trace Gravel	376.07		7		
			7		
		-45	12		
Gray Fine SAND, Trace Silt	373.57		7		
			10		
			12		
Gray Medium SAND	371.07		8		
			8		
		-50	6		
Gray Fine to Coarse SAND, Trace Silt	366.07		6		
			6		
		-55	10		
Gray Medium to Coarse SAND, Trace Gravel	361.07		5		
			6		
		-60	8		
Gray Medium to Coarse SAND, Trace Gravel *(continued)*					
Gray Fine to Coarse SAND, with Silt, Gravel	358.07		4		
			5		
		-65	6		
Brown GRAVEL	351.07		6		
			5		
		-70	7		
Gray Fine to Coarse SAND, Trace Silt, Gravel	346.07		5		
			8		
	344.57	-75	9		
		-80			

The Unconfined Compressive Strength (UCS) Failure Mode is indicated by (B-Bulge, S-Shear, P-Penetrometer)
The SPT (N value) is the sum of the last two blow values in each sampling zone (AASHTO T206)

BBS, from 137 (Rev. 8-99)

McDonough Associates Inc.
Engineers / Architects
130 East Randolph Street Chicago, Illinois 60601

FILE NAME = 060W008-76A91-019-Soil_Borings.dgn	USER NAME = jehrhart	DESIGNED - JCE	REVISED -	STATE OF ILLINOIS DEPARTMENT OF TRANSPORTATION	SOIL BORING LOGS STRUCTURE NO. 060-W008	F.A.I. RTE.	SECTION	COUNTY	TOTAL SHEETS / SHEET NO.
		CHECKED - PMH	REVISED -			270	60-1B-1	MADISON	712 / 531
	PLOT SCALE = 1:0.0833333	DRAWN - AMV	REVISED -					CONTRACT NO. 76A91	
	PLOT DATE = 3/18/11	CHECKED - JCE	REVISED -		SHEET NO. 19 OF 19 SHEETS		ILLINOIS	FED. AID PROJECT	

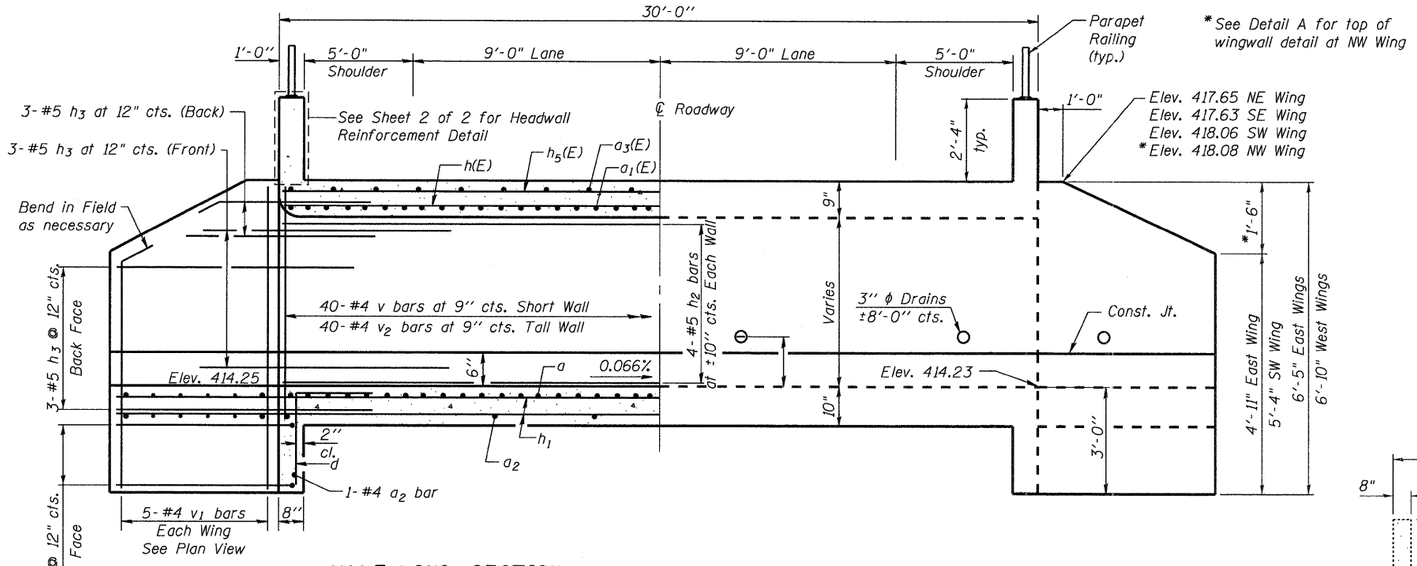

HALF LONG. SECTION

HALF ELEVATION

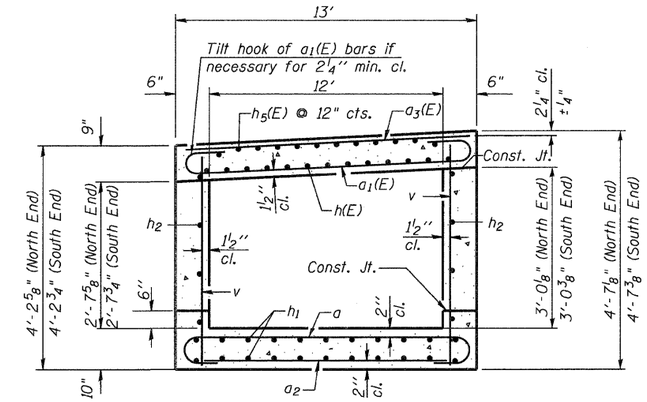

SECTION THRU BARREL
(Looking South)

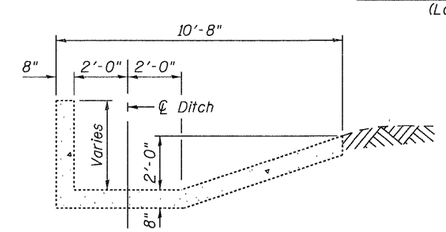

SECTION B-B

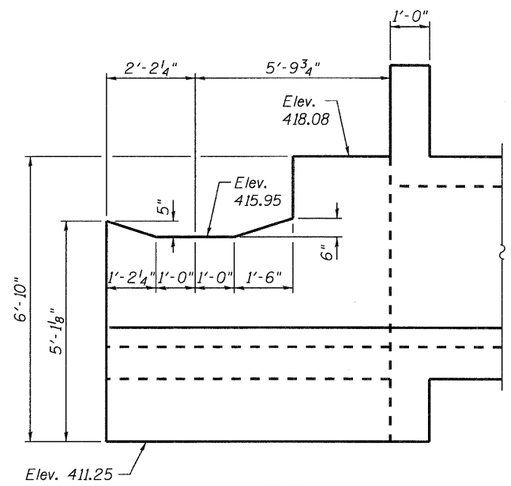

DETAIL A
(Showing NW wing dimensions)

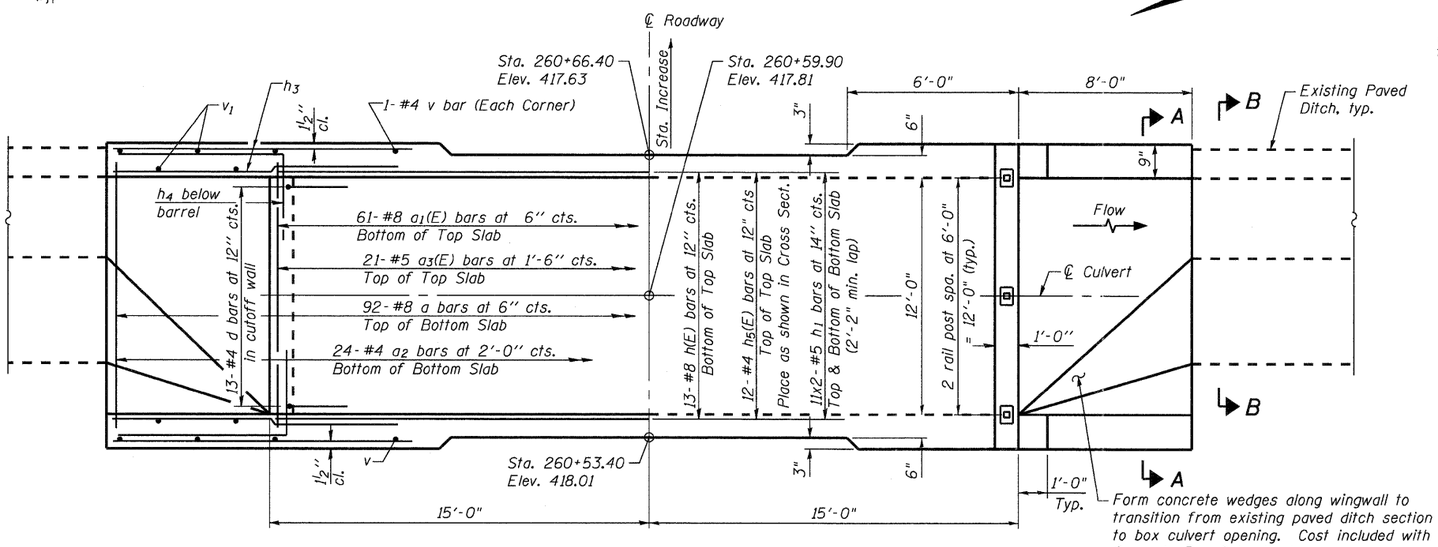

SHOWING REINFORCEMENT

SHOWING OUTLINES

PLAN

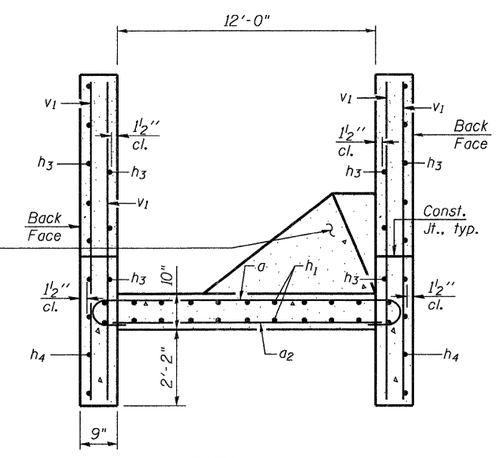

SECTION A-A

NOTES

A distance of half the length of the wingwall but not less than six feet of the barrel shall be poured monolithically with the wingwalls.

Reinforcement bars shall conform to the requirements of ASTM A 706 Gr 60. See Special Provisions.

See Sheet 2 of 2 for bar details and Bill of Material.

DESIGN STRESSES

fy = 60,000 psi
f'c = 3,500 psi

LOADING HS 20-44 & ALT.

Coombe-Bloxdorf P.C.
-CIVIL ENGINEERS-
-STRUCTURAL ENGINEERS-
-LAND SURVEYORS-
Design Firm License No. 184-002703

FILE NAME = ...\D876A91-532-culv_260.59.dgn	USER NAME = _MML_	DESIGNED - MCB	REVISED -
		CHECKED -	REVISED -
	PLOT SCALE = 0:1.000000 ':' / IN.	DRAWN - CFC/MML	REVISED -
CB PROJECT NO. 08029	PLOT DATE = 3/14/2011	CHECKED - MCB	REVISED -

STATE OF ILLINOIS
DEPARTMENT OF TRANSPORTATION

CULVERT PLAN
STATION 260+59.90 (LEVEE ACCESS RD.)
SHEET NO. 1 OF 2 SHEETS

F.A.I. RTE.	SECTION	COUNTY	TOTAL SHEETS	SHEET NO.
270	60-1B-1	MADISON	712	532
		CONTRACT NO. 76A91		
		ILLINOIS FED. AID PROJECT		

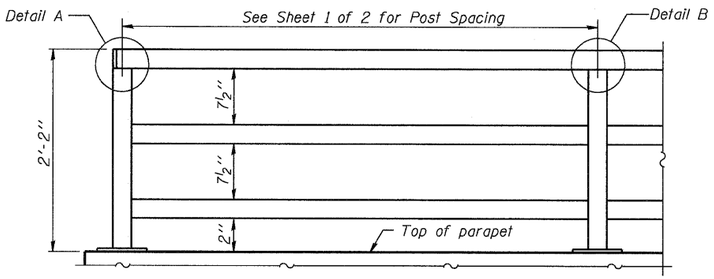

PARAPET RAILING ELEVATION
(Inside Face of Three Element Rail)

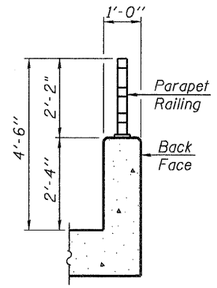

SECTION THRU DECK

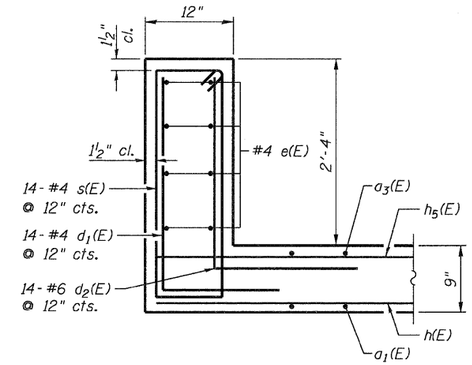

SOUTH HEADWALL REINFORCEMENT DETAIL

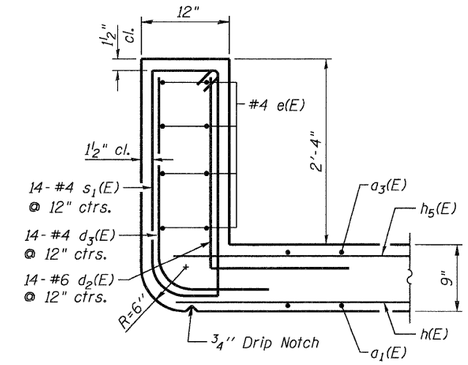

NORTH HEADWALL REINFORCEMENT DETAIL

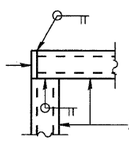

DETAIL A

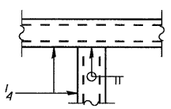

DETAIL B

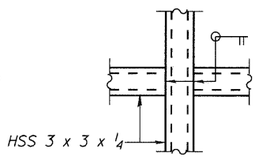

DETAIL C

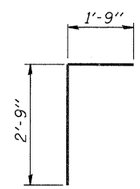

BAR d

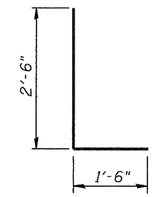

BAR d1(E)

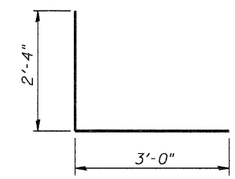

BAR d2(E)

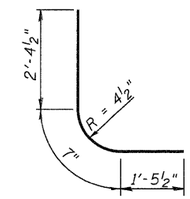

BAR d3(E)

Note:
All steel rail elements shall be galvanized according to Article 509.05 of the Standard Specifications.

BILL OF MATERIAL

Bar	No.	Size	Length	Shape
a	92	#8	14'-6"	
a1(E)	61	#8	14'-6"	
a2	26	#4	12'-3"	
a3(E)	21	#5	12'-3"	
d	26	#4	4'-6"	
d1(E)	14	#4	4'-0"	
d2(E)	28	#6	5'-4"	
d3(E)	14	#4	4'-5"	
e(E)	16	#4	13'-2"	
h(E)	13	#8	29'-9"	
h1	44	#5	23'-11"	
h2	8	#5	29'-9"	
h3	36	#5	11'-0"	
h4	12	#5	10'-8"	
h5(E)	12	#4	29'-9"	
v	42	#4	3'-9"	
v1	20	#4	6'-2"	
v2	42	#4	4'-3"	
s(E)	14	#4	7'-9"	
s1(E)	14	#4	7'-7"	
Concrete Box Culverts		Cu. Yd.	43.8	
Reinforcement Bars		Pound	6050	
Reinforcement Bars, Epoxy Coated		Pound	4490	
Parapet Railing		Foot	24	

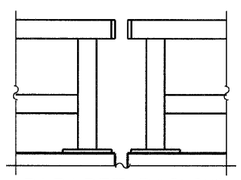

PARAPET RAILING ELEVATION AT EXPANSION JOINT
(Two Element Rail Shown - Three Element Rail Similar)

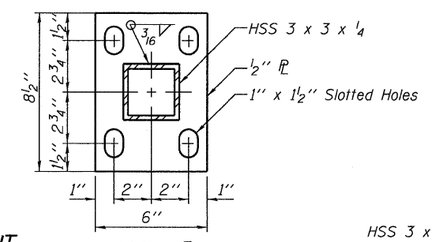

BASE PL

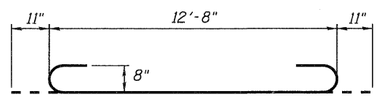

BAR a or a1(E)

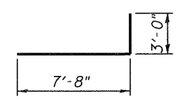

BAR h4

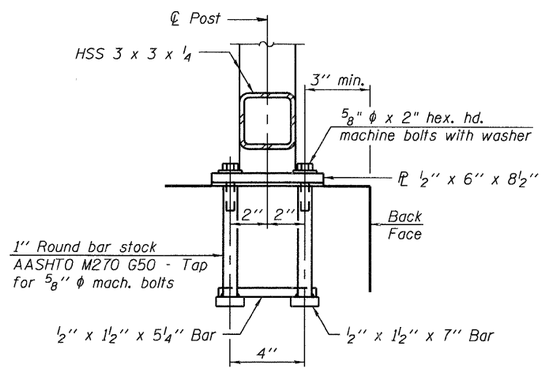

ANCHOR BOLT DETAILS

In lieu of the cast-in-place anchor device shown, the Contractor has the option of drilling and setting ⅝" ϕ anchor rods according to Article 509.06 of the Standard Specifications. Embedment shall be according to the manufacturer's specifications.

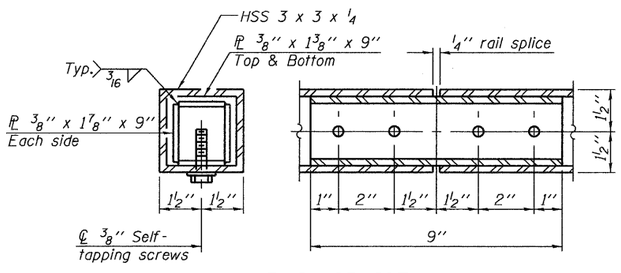

RAIL SPLICE

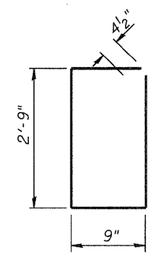

BAR s(E)

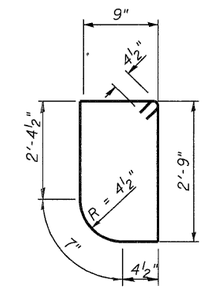

BAR s1(E)

Coombe-Bloxdorf P.C.
-CIVIL ENGINEERS-
-STRUCTURAL ENGINEERS-
-LAND SURVEYORS-
Design Firm License No. 184-002703

FILE NAME = ...\D876A91-533-culv_260.59.dgn	USER NAME = _MML_	DESIGNED -	REVISED -
		CHECKED -	REVISED -
	PLOT SCALE = 0:1.000000 ':' / IN.	DRAWN -	REVISED -
CB PROJECT NO. 08029	PLOT DATE = 3/14/2011	CHECKED -	REVISED -

STATE OF ILLINOIS
DEPARTMENT OF TRANSPORTATION

CULVERT DETAILS
STATION 260+59.90 (LEVEE ACCESS RD.)
SHEET NO. 2 OF 2 SHEETS

F.A.I. RTE.	SECTION	COUNTY	TOTAL SHEETS	SHEET NO.
270	60-1B-1	MADISON	712	533
		CONTRACT NO. 76A91		
		ILLINOIS FED. AID PROJECT		

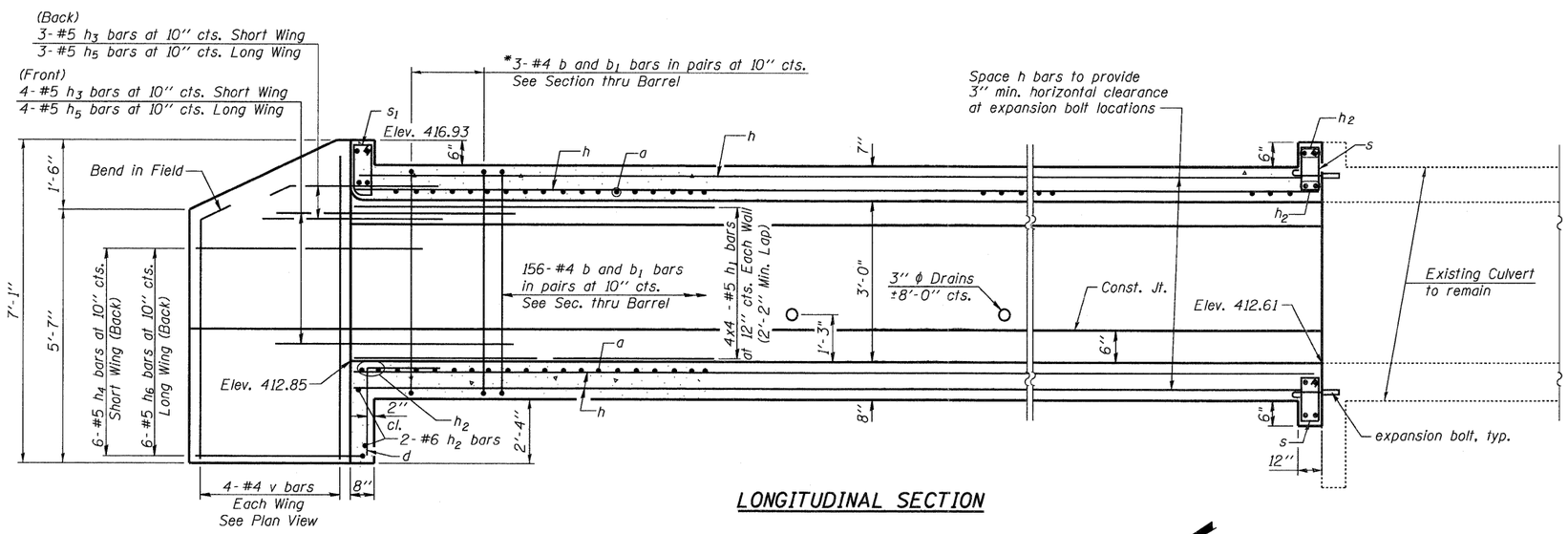

LONGITUDINAL SECTION

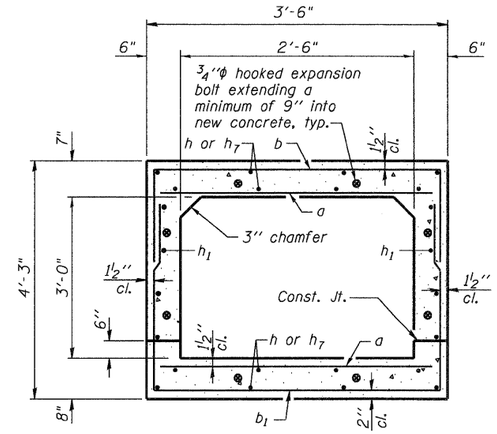

SECTION THRU BARREL

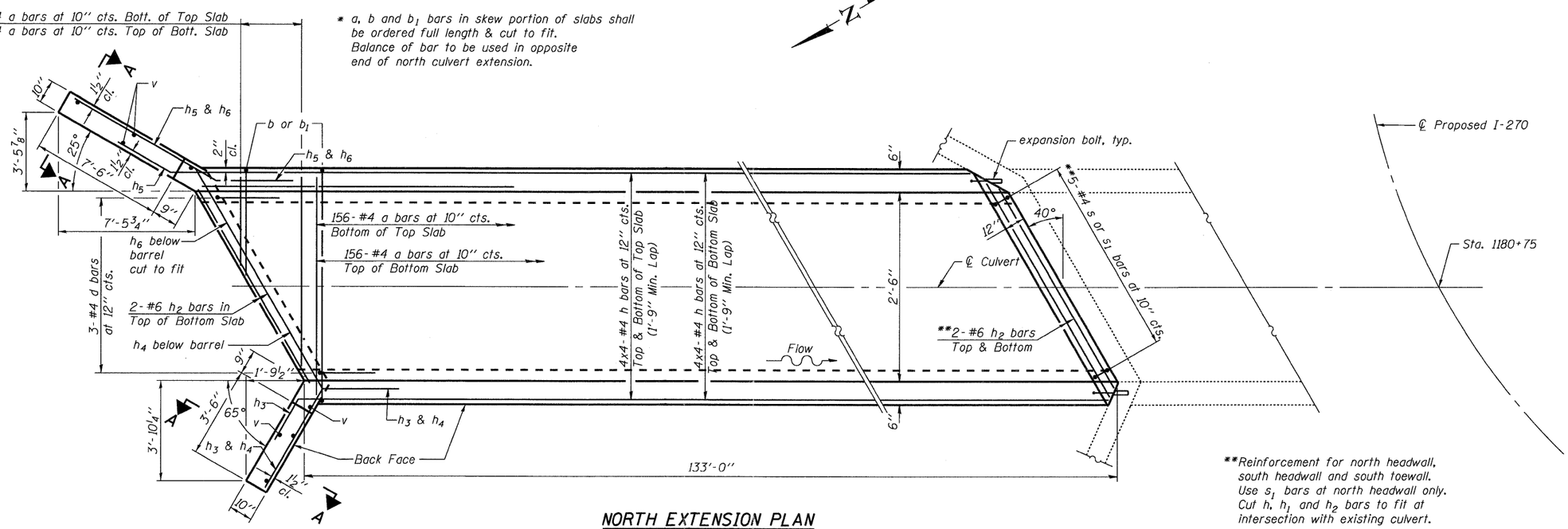

NORTH EXTENSION PLAN

**Reinforcement for north headwall, south headwall and south toewall. Use s_1 bars at north headwall only. Cut h, h_1 and h_2 bars to fit at intersection with existing culvert.

NOTES

A distance of half the length of the wingwall but not less than six feet of the barrel shall be poured monolithically with the wingwalls.

Reinforcement bars shall conform to the requirements of ASTM A 706 Gr 60. See Special Provisions.

Bars indicated thus 12 x 4-#5 etc. indicates 12 lines of bars with 4 lengths per line.

See Sheet 2 of 3 for Section A-A, Section thru Headwall, bar details and Bill of Material.

DESIGN STRESSES

fy = 60,000 psi
f'c = 3,500 psi

LOADING HS 20-44 & ALT.

Coombe-Bloxdorf P.C.
-CIVIL ENGINEERS-
-STRUCTURAL ENGINEERS-
-LAND SURVEYORS-
Design Firm License No. 184-002703

FILE NAME = ...\D876A91-534-culv_1180_75.dgn	USER NAME = _MML_	DESIGNED -	REVISED -	STATE OF ILLINOIS DEPARTMENT OF TRANSPORTATION	CULVERT EXTENSION DETAILS STATION 1180+75	F.A.I. RTE.	SECTION	COUNTY	TOTAL SHEETS	SHEET NO.
		CHECKED -	REVISED -			270	60-1B-1	MADISON	712	534
	PLOT SCALE = 0:1.000000 ':' / IN.	DRAWN -	REVISED -					CONTRACT NO. 76A91		
CB PROJECT NO. 00029	PLOT DATE = 3/14/2011	CHECKED -	REVISED -		SHEET NO. 1 OF 3 SHEETS		ILLINOIS FED. AID PROJECT			

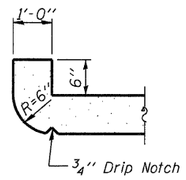

SECTION THRU HEADWALL
(Upstream End Only)

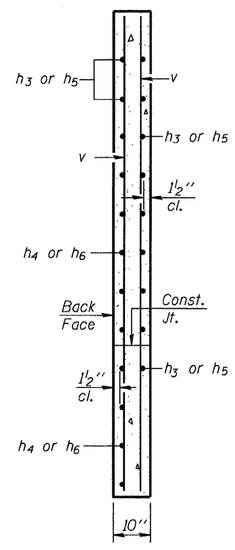

SECTION A-A

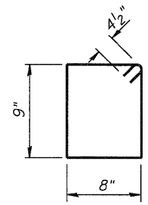

BAR s

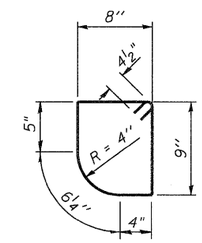

BAR s_1

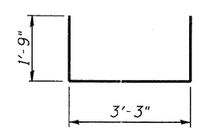

BAR b

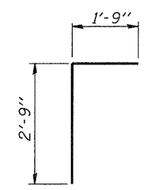

BAR d

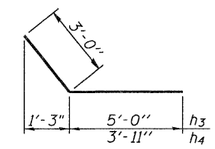

BARS h_3 & h_4

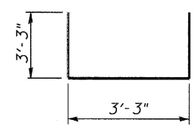

BAR b_1

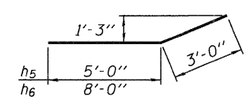

BARS h_5 & h_6

NORTH EXTENSION BILL OF MATERIAL

Bar	No.	Size	Length	Shape
a	318	#4	3'-3"	
b	159	#4	6'-9"	
b_1	159	#4	9'-9"	
d	3	#4	4'-6"	
h	64	#4	34'-6"	
h_1	32	#5	34'-10"	
h_2	16	#6	4'-3"	
h_3	7	#5	8'-0"	
h_4	6	#5	6'-11"	
h_5	7	#5	8'-0"	
h_6	6	#5	11'-0"	
s	10	#4	3'-7"	
s_1	5	#4	3'-6"	
v	8	#4	6'-1"	
Concrete Box Culverts			Cu. Yd.	39.6
Reinforcement Bars			Pound	5490
Expansion Bolts 3/4"			Each	8

Coombe-Bloxdorf P.C.
-CIVIL ENGINEERS-
-STRUCTURAL ENGINEERS-
-LAND SURVEYORS-
Design Firm License No. 184-002703

FILE NAME = ...\D876A91-535-culv_1180_75.dgn	USER NAME = _MML_	DESIGNED -	REVISED -
		CHECKED -	REVISED -
	PLOT SCALE = 01.000000 ':' / IN.	DRAWN -	REVISED -
CB PROJECT NO. 08029	PLOT DATE = 3/14/2011	CHECKED -	REVISED -

STATE OF ILLINOIS
DEPARTMENT OF TRANSPORTATION

CULVERT EXTENSION DETAILS
STATION 1180+75

SHEET NO. 2 OF 3 SHEETS

F.A.I. RTE.	SECTION	COUNTY	TOTAL SHEETS	SHEET NO.
270	60-1B-1	MADISON	712	535

CONTRACT NO. 76A91

ILLINOIS FED. AID PROJECT

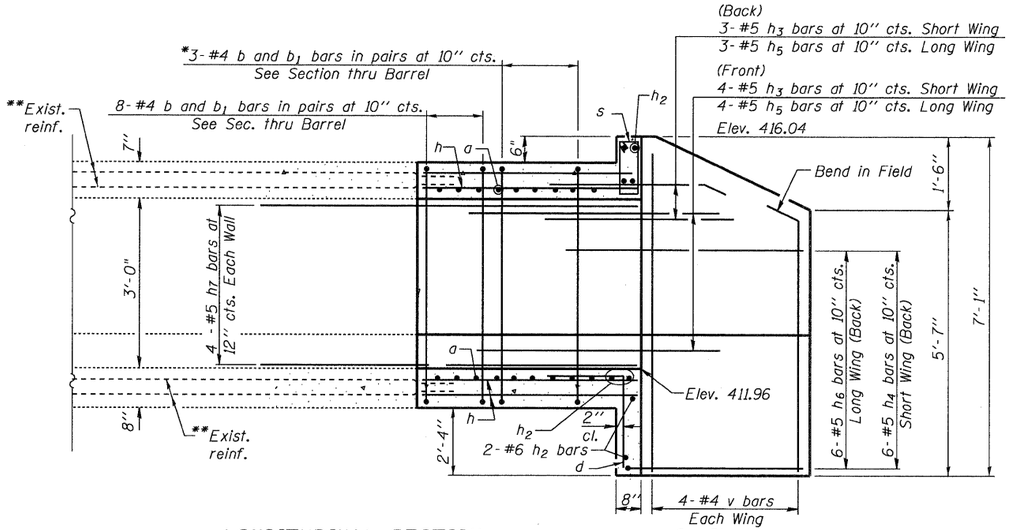

LONGITUDINAL SECTION

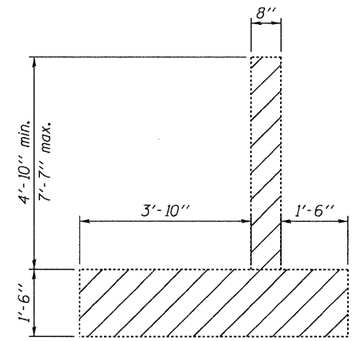

SECTION C-C

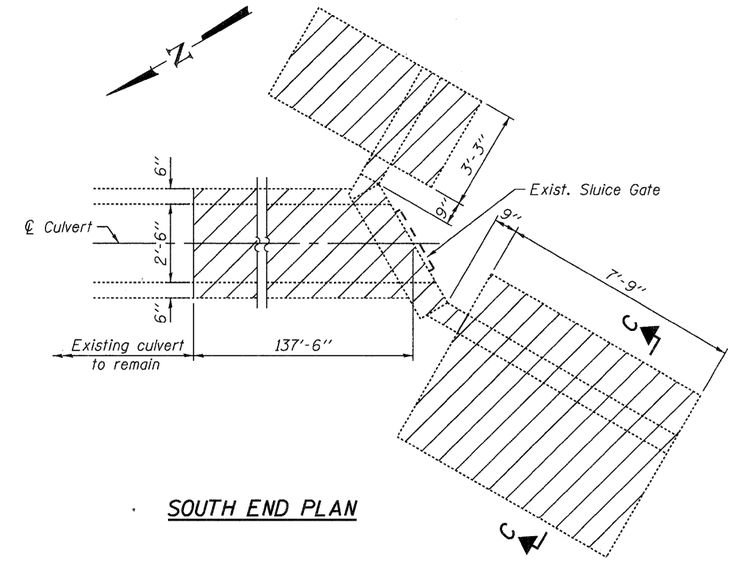

SOUTH END PLAN

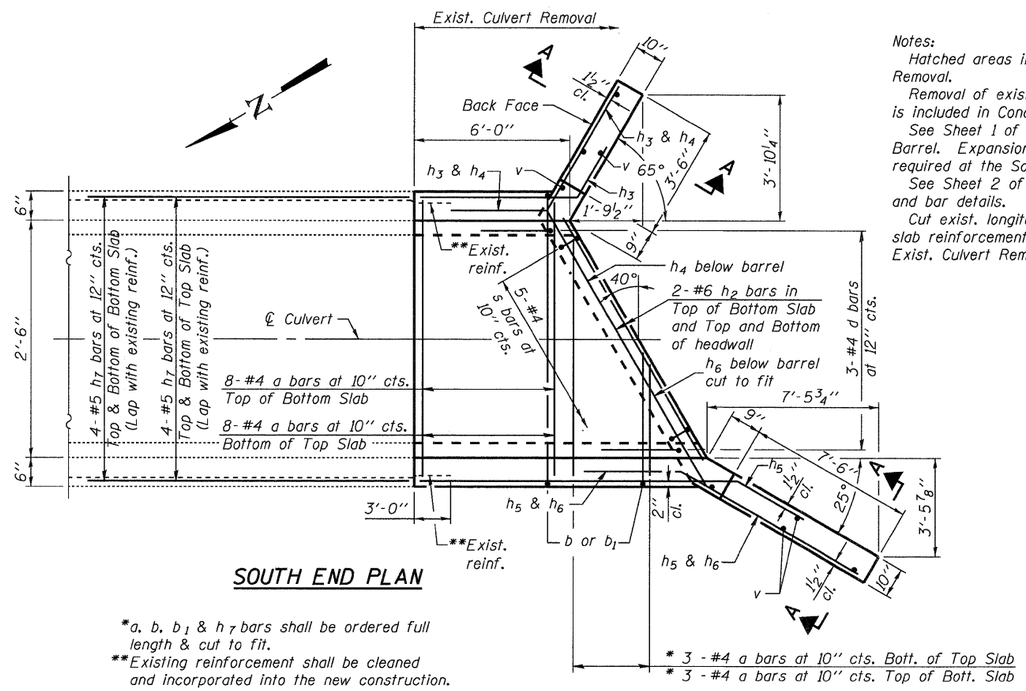

SOUTH END PLAN

Notes:
Hatched areas indicate Concrete Removal.
Removal of existing Sluice Gate is included in Concrete Removal.
See Sheet 1 of 3 for Section Thru Barrel. Expansion Bolts are not required at the South end.
See Sheet 2 of 3 for Section A-A and bar details.
Cut exist. longitudinal wall and slab reinforcement 3'-0" beyond Exist. Culvert Removal.

*a, b, b1 & h7 bars shall be ordered full length & cut to fit.
**Existing reinforcement shall be cleaned and incorporated into the new construction. Cost included with Concrete Removal. Any reinforcements bars that are damaged during concrete removal operations shall be repaired or replaced using an approved bar splicer or anchorage system. Cost incidental to "Concrete Removal".

* 3-#4 a bars at 10" cts. Bott. of Top Slab
* 3-#4 a bars at 10" cts. Top of Bott. Slab

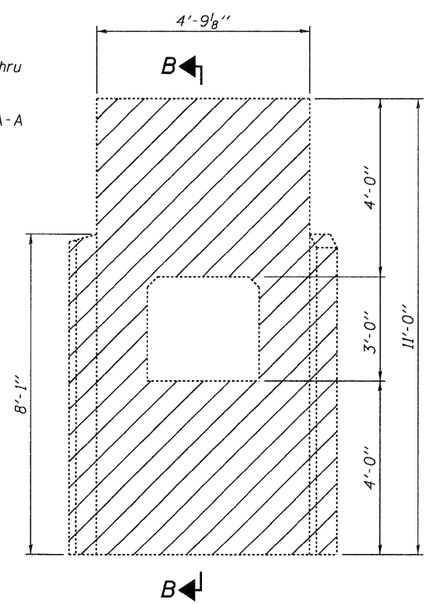

SOUTH END ELEVATION

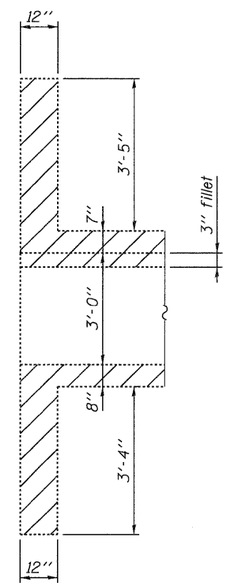

SECTION B-B

SOUTH END BILL OF MATERIAL

Bar	No.	Size	Length	Shape
a	22	#4	3'-3"	
b	22	#4	6'-9"	
b1	22	#4	9'-9"	
d	3	#4	4'-6"	
h2	8	#6	4'-3"	
h3	7	#5	8'-0"	
h4	6	#5	6'-11"	
h5	7	#5	8'-0"	
h6	6	#5	11'-0"	
h7	24	#5	8'-6"	
s	10	#4	3'-7"	
v	8	#4	6'-1"	
Concrete Box Culverts			Cu. Yd.	4.9
Reinforcement Bars			Pound	850
Concrete Removal			Cu. Yd.	44.8

Coombe-Bloxdorf P.C.
-CIVIL ENGINEERS-
-STRUCTURAL ENGINEERS-
-LAND SURVEYORS-
Design Firm License No. 184-002703

FILE NAME = ...\D876A91-536-culv_1180.75.dgn	USER NAME = _MML_	DESIGNED -	REVISED -
		CHECKED -	REVISED -
	PLOT SCALE = 0:1.000000 ':' / IN.	DRAWN -	REVISED -
CB PROJECT NO. 08029	PLOT DATE = 3/14/2011	CHECKED -	REVISED -

STATE OF ILLINOIS
DEPARTMENT OF TRANSPORTATION

CULVERT EXTENSION DETAILS
STATION 1180+75
SHEET NO. 3 OF 3 SHEETS

F.A.I. RTE.	SECTION	COUNTY	TOTAL SHEETS	SHEET NO.
270	60-1B-1	MADISON	712	536
		CONTRACT NO. 76A91		
		ILLINOIS FED. AID PROJECT		

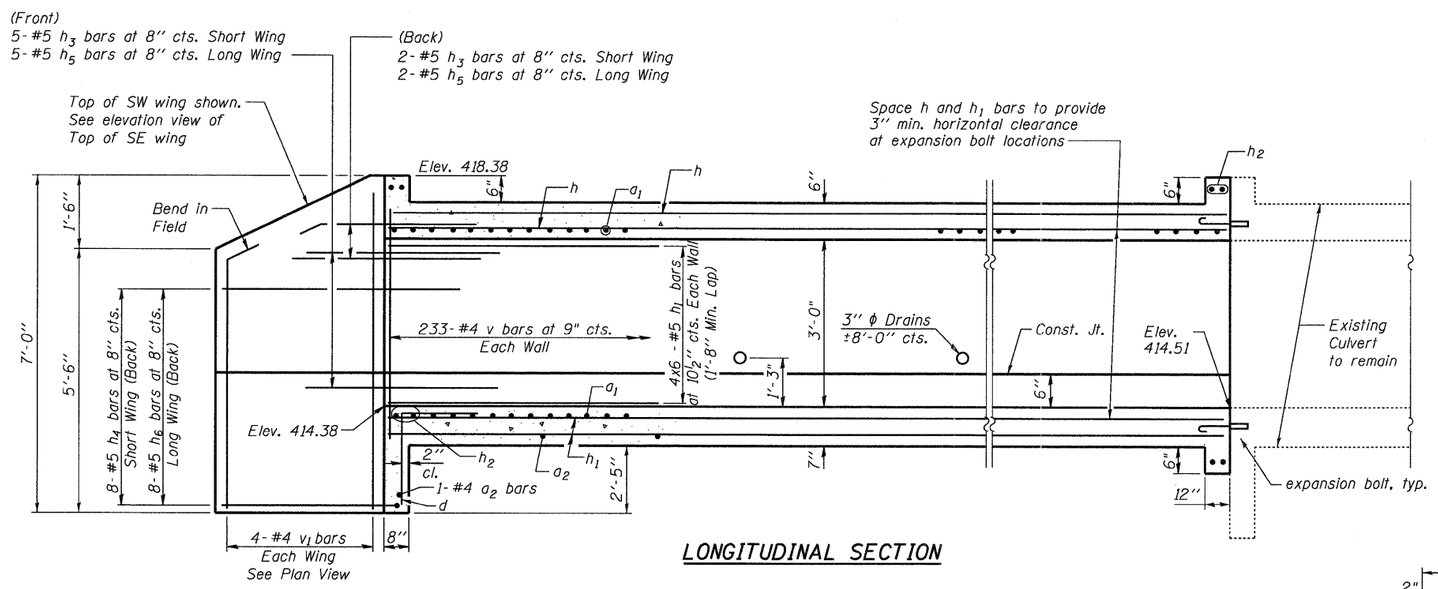

LONGITUDINAL SECTION

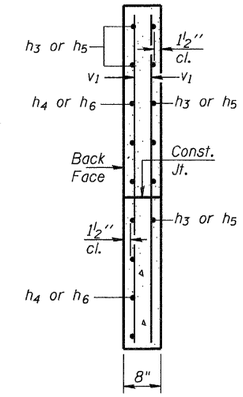

SECTION A-A

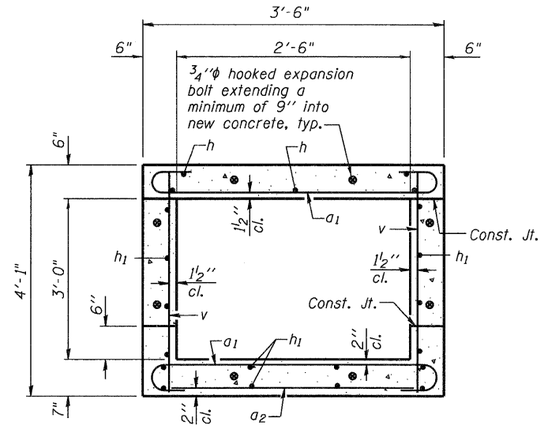

SECTION THRU BARREL

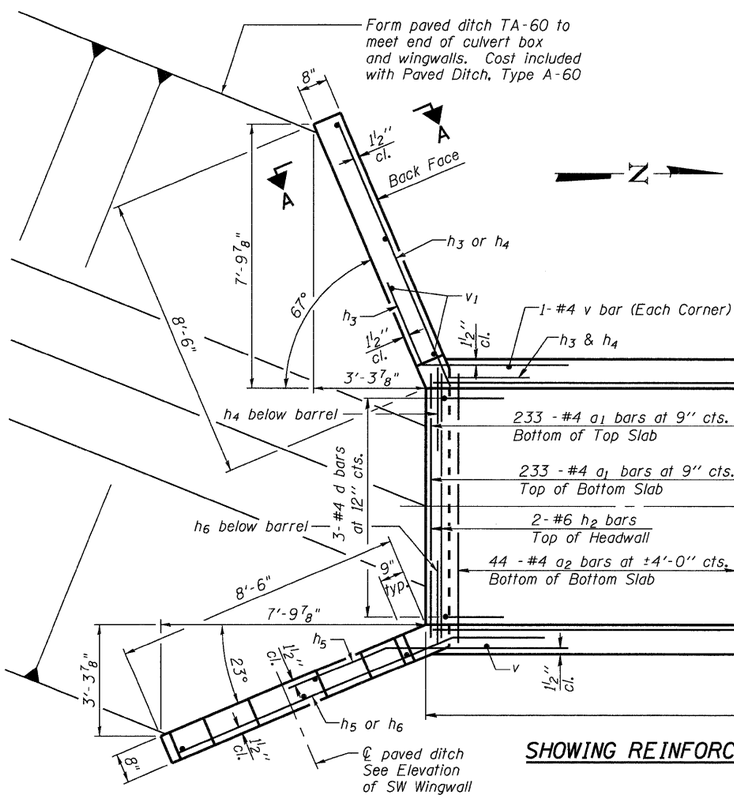

SHOWING REINFORCEMENT

SHOWING OUTLINES

PLAN

NOTES

A distance of half the length of the wingwall but not less than six feet of the barrel shall be poured monolithically with the wingwalls.

Reinforcement bars shall conform to the requirements of ASTM A 706 Gr 60. See Special Provisions.

Bars indicated thus 4 x 6-#5 etc. indicates 4 lines of bars with 6 lengths per line.

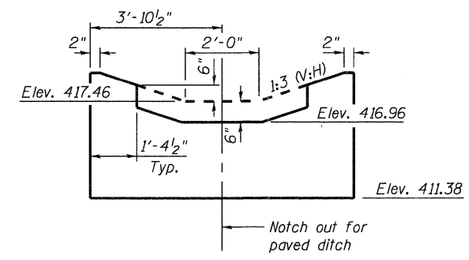

ELEVATION - SE WINGWALL

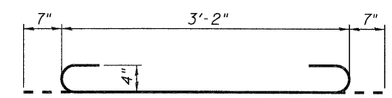

BAR a_1

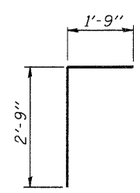

BAR d

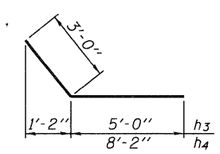

BARS h_3 & h_4

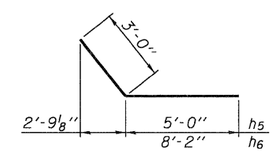

BARS h_5 & h_6

BILL OF MATERIAL

Bar	No.	Size	Length	Shape
a_1	466	#4	4'-4"	
a_2	45	#4	3'-2"	
d	3	#4	4'-6"	
h	30	#6	30'-10"	
h_1	96	#5	30'-6"	
h_2	8	#6	3'-2"	
h_3	7	#5	8'-0"	
h_4	8	#5	11'-2"	
h_5	7	#5	8'-0"	
h_6	8	#5	11'-2"	
v	468	#4	3'-9"	
v_1	8	#4	6'-8"	
Concrete Box Culverts			Cu. Yd.	46.9
Reinforcement Bars			Pound	7450
Expansion Bolts ¾"			Each	8

DESIGN STRESSES

fy = 60,000 psi
f'c = 3,500 psi

LOADING HS 20-44 & ALT.

Coombe-Bloxdorf P.C.
-CIVIL ENGINEERS-
-STRUCTURAL ENGINEERS-
-LAND SURVEYORS-
Design Firm License No. 184-002703

FILE NAME = ...\D876A91-537-culv_1211_00.dgn	USER NAME = _MML_	DESIGNED - MCB	REVISED -	STATE OF ILLINOIS DEPARTMENT OF TRANSPORTATION	CULVERT EXTENSION DETAILS STATION 1211+00
		CHECKED -	REVISED -		
	PLOT SCALE = 0:1.000000 ':' / IN.	DRAWN - MML	REVISED -		
CB PROJECT NO. 00029	PLOT DATE = 3/14/2011	CHECKED - MCB	REVISED -		SHEET NO. 1 OF 1 SHEETS

F.A.I. RTE.	SECTION	COUNTY	TOTAL SHEETS	SHEET NO.
270	60-1B-1	MADISON	712	537
		CONTRACT NO. 76A91		
		ILLINOIS FED. AID PROJECT		

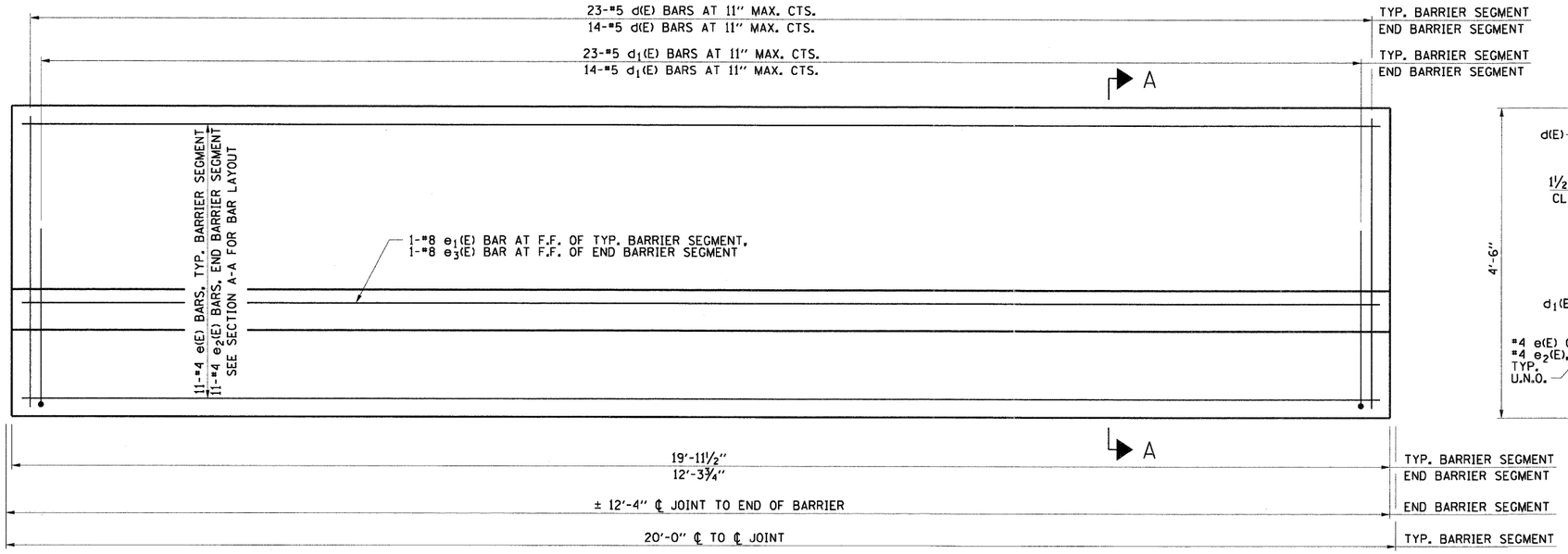

BARRIER ELEVATION – FRONT FACE

46 REQ'D: TYP. BARRIER SEGMENT, 20'-0" NOMINAL LENGTH
1 REQ'D: END BARRIER SEGMENT, ± 12'-4" NOMINAL LENGTH
SEE NOTE 1

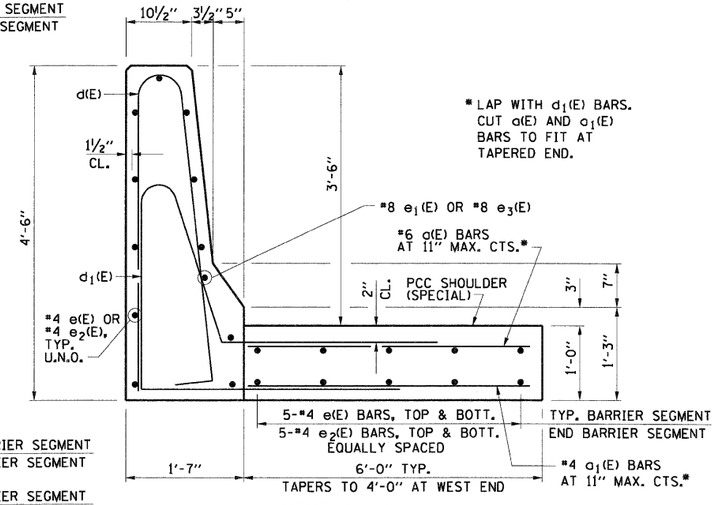

SECTION A–A

BILL OF MATERIAL

	BAR	NO.	SIZE	LENGTH	SHAPE
	a(E)	1,072	#6	5'-10"	——
	a1(E)	1,072	#4	5'-10"	——
	d(E)	1,072	#5	9'-2"	
	d1(E)	1,072	#5	12'-8"	
	e(E)	966	#4	19'-8"	——
	e1(E)	46	#8	19'-8"	——
	e2(E)	21	#4	12'-0"	——
	e3(E)	1	#8	12'-0"	——
*	CONCRETE BARRIER, SINGLE FACE, 42 INCH HEIGHT (SPECIAL)			FOOT	933
	PROTECTIVE COAT			SQ YD	934
	REINFORCEMENT BARS, EPOXY COATED			POUND	53,290
*	PORTLAND CEMENT CONCRETE SHOULDERS 12" (SPECIAL)			SQ YD	615

* SEE SPECIAL PROVISION

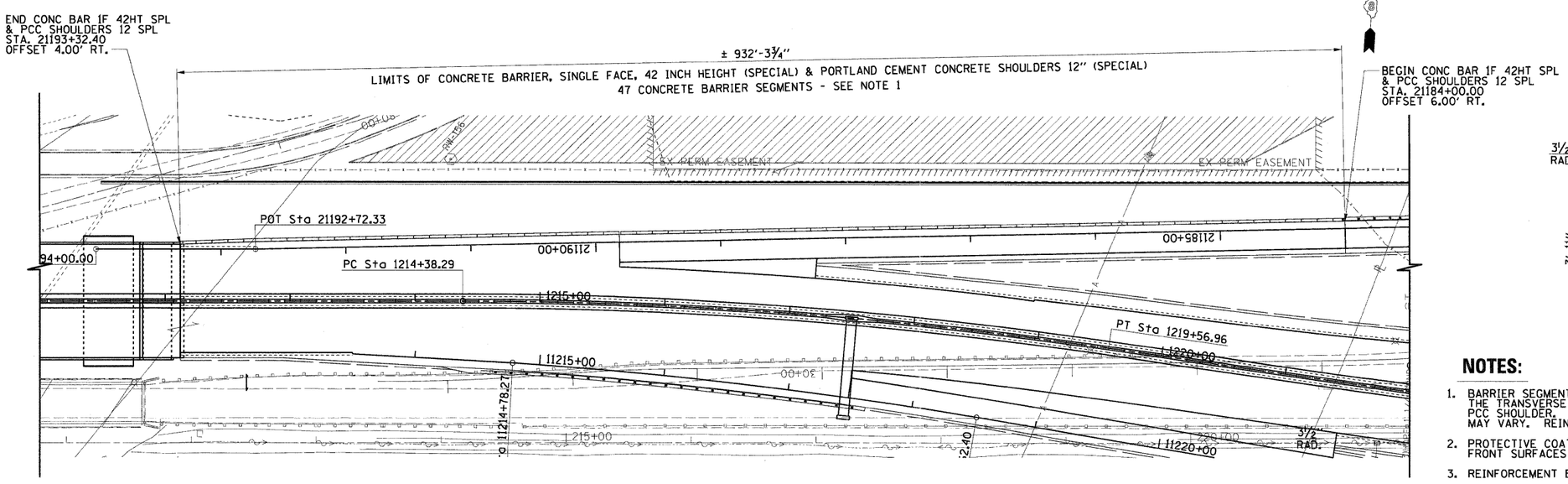

PLAN VIEW

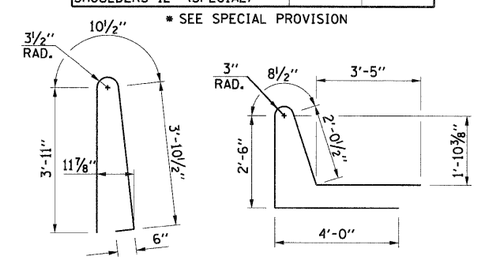

BAR d(E)

BAR d_1(E)

NOTES:

1. BARRIER SEGMENT LENGTHS SHALL BE ADJUSTED AS NEEDED TO MATCH THE TRANSVERSE CONTRACTION JOINT LOCATIONS IN THE ADJACENT PCC SHOULDER. ONE END SEGMENT IS DETAILED. ACTUAL END SEGMENTS MAY VARY. REINFORCEMENT DETAILING SHALL BE ADJUSTED ACCORDINGLY.
2. PROTECTIVE COAT SHALL BE APPLIED TO THE TOP SURFACE AND EXPOSED FRONT SURFACES OF THE BARRIER.
3. REINFORCEMENT BARS DESIGNATED (E) SHALL BE EPOXY COATED.
4. SPECIAL REINFORCEMENT REQUIREMENTS FOR PCC SHOULDER ARE DETAILED ON THIS SHEET AND ARE PAID FOR AS REINFORCEMENT BARS, EPOXY COATED. SEE IDOT STANDARD 483001 FOR DETAILS NOT SHOWN. SEE SPECIAL PROVISIONS FOR ADDITIONAL INFORMATION.
5. ONE LAYER OF ½" PREFORMED JOINT FILLER SHALL BE PROVIDED AT EACH JOINT BETWEEN CONCRETE BARRIER SEGMENTS. COST INCLUDED IN CONCRETE BARRIER, SINGLE FACE, 42 INCH HEIGHT (SPECIAL).

The Subsurface Utility Engineering Company
449 Munroe Falls Road
Tallmadge, OH 44278
(330) 794-4455

So-Deep Test Hole Certification Form

So-Deep, Corporate Office
8397 Euclid Avenue
Manassas Park, VA 20111
(703)361-6005

Control # SIMB922
Test Hole # 1
Plan Scale 1"=50'
Sheet # 8
Proposed BRIDGE REPLACEMENT
Date JULY 16, 2009

Condition of paving prior to work
NO PAVING

City, County, State MADISON CO., IL
Gen. Loc. I-270 E.B. @ CHAIN OF ROCKS CANAL
Recorded Size/Material/Type 14" (O.D.) COATED STEEL (EXPLORER) GAS LINE
Foreman/Truck#/Form By J. CLINE / 219 / P. REYNOLDS

B.M. 1 Elev. = 429.36'
is GIVEN

B.M. 2 Elev. = 429.36'
is CALCULATED

Benchmarks check BY 0.00'
Elevations are referenced to B.M.#1

Description: (BM 270-11) CHIS "[]" FOUND, CENTER OF CONC. PIER BASE FOR E.B. I-270, JUST E OF EAST BANK, CHAIN OF

Description: CHIS "X" SET NE CORNER OF CONC. PIER BASE FOR W.B. I-270, JUST E OF EAST BANK, CHAIN OF ROCKS CANAL

SO-DEEP will attempt to use the BM/HI most applicable to your design. If however, BMs differ by more than .05', resulting differences could cause design conflicts.

Recorded Size/Type of utility WAS FOUND

There WERE NOT additional utilities in the test hole

The utility WAS in good condition.

Paving Thickness and type NO PAVING

Color of ribbon installed YELLOW

Soil Type MOIST SAND

Field Condition GRASS R/W

T.H. tied to PEG

14" COATED STEEL (EXPLORER) GAS LINE
Size/Material/Type
Portion of pipe exposed
for O.D. measurement:
FULL

Remarks: NONE

Facing NORTH

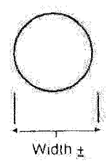

Existing Grade of GRASS R/W

Survey Mark PEG
(set by SO-DEEP)

Elev. 423.37'

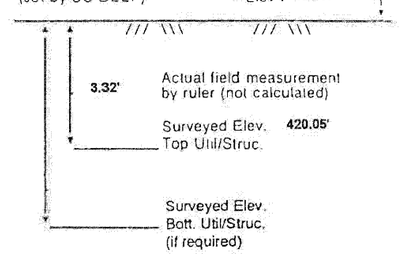

TH DUG 192.4'± RT OF CL STA 203+94.1±, I-270

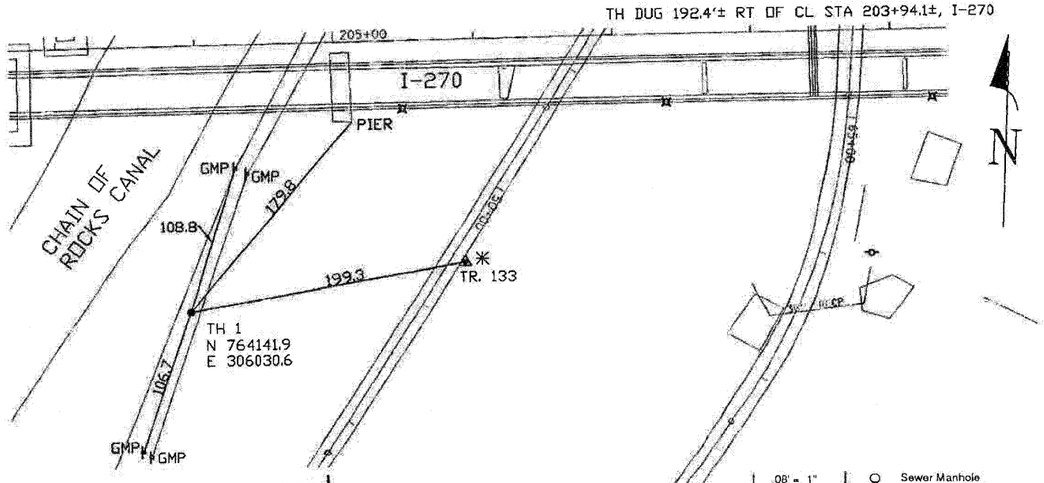

R/W = Rights of Way
N.T.S. = Not to Scale
✱ = Not Shown on Plan
PCC = Precast Concrete
COND. = Conduit
CONC. = Concrete
O.D. = Outside Diameter
C.I. = Cast Iron
D.I. = Ductile Iron
RPC = Rough Pour Concrete
CL = Centerline

T.C. = Terra Cotta
PLAS. = Plastic
BL = Base Line
ELEC. = Electric
TELE = Telephone
T.H. = Test Hole
SW = Sidewalk
DW = Driveway
BM = Benchmark
C.B. = Catch Basin
GV = Gas Valve

Performing out-of-sight work...with vision!™

Note: To Eliminate mistakes and check this work, So-Deep suggests you scale and plot all dimensions onto the plans and review all elevations carefully. So-Deep is responsible only for information shown on our forms.

.08' = 1"
.16' = 2"
.25' = 3"
.33' = 4"
.42' = 5"
.50' = 6"
.58' = 7"
.67' = 8"
.75' = 9"
.83' = 10"
.92' = 11"

Sewer Manhole
Test Hole
Fire Hydrant
Pole
Fence Line
Electric Manhole
= T.S. = Traverse Station
Valve
Water Meter
Telephone Manhole
Telephone Pedestal

The Subsurface Utility Engineering Company
449 Munroe Falls Road
Tallmadge, OH 44278
(330) 794-4455

So-Deep Test Hole Certification Form

So-Deep, Corporate Office
8397 Euclid Avenue
Manassas Park, VA 20111
(703)361-6005

Control # SIMB922
Test Hole # 2
Plan Scale 1"=50'
Sheet # 8
Proposed BRIDGE REPLACEMENT
Date JULY 16, 2009

Condition of paving prior to work
NO PAVING

City, County, State MADISON CO., IL
Gen. Loc. I-270 E.B. @ CHAIN OF ROCKS CANAL
Recorded Size/Material/Type 6" COATED STEEL (BUCKEYE) GAS LINE
Foreman/Truck#/Form By J. CLINE / 219 / P. REYNOLDS

B.M. 1 Elev. = 429.36'
is GIVEN

B.M. 2 Elev. = 429.36'
is CALCULATED

Benchmarks check BY 0.00'
Elevations are referenced to B.M.#1

Description: (BM 270-11) CHIS "[]" FOUND, CENTER OF CONC. PIER BASE FOR E.B. I-270, JUST E OF EAST BANK, CHAIN OF

Description: CHIS "X" SET NE CORNER OF CONC. PIER BASE FOR W.B. I-270, JUST E OF EAST BANK, CHAIN OF ROCKS CANAL

SO-DEEP will attempt to use the BM/HI most applicable to your design. If however, BMs differ by more than .05', resulting differences could cause design conflicts.

Recorded Size/Type of utility WAS FOUND

There WERE NOT additional utilities in the test hole

The utility WAS in good condition.

Paving Thickness and type NO PAVING

Color of ribbon installed YELLOW

Soil Type MOIST SAND

Field Condition GRASS R/W

T.H. tied to PEG

7" COATED STEEL (BUCKEYE) GAS LINE
Size/Material/Type
Portion of pipe exposed
for O.D. measurement:
FULL

Remarks: NONE

Facing NORTH

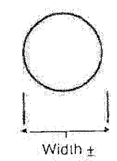

Existing Grade of GRASS R/W

Survey Mark PEG
(set by SO-DEEP)

Elev. 423.32'

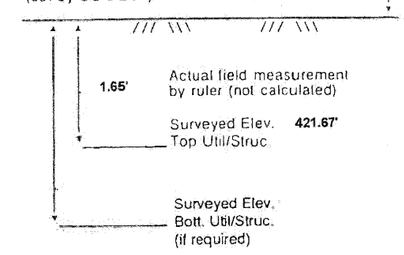

TH DUG 196.6'± RT OF CL STA 204+02.1±, I-270

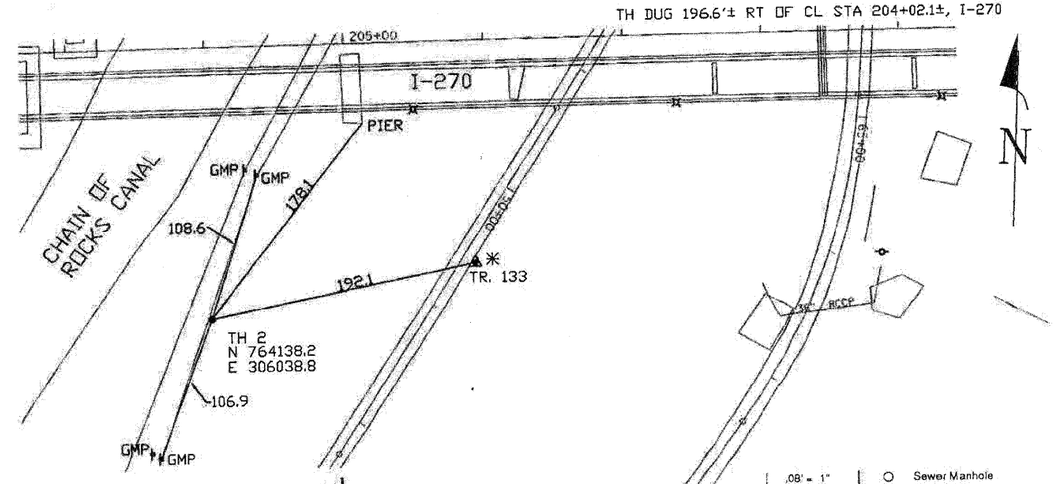

R/W = Rights of Way
N.T.S. = Not to Scale
✱ = Not Shown on Plan
PCC = Precast Concrete
COND. = Conduit
CONC. = Concrete
O.D. = Outside Diameter
C.I. = Cast Iron
D.I. = Ductile Iron
RPC = Rough Pour Concrete
CL = Centerline

T.C. = Terra Cotta
PLAS. = Plastic
BL = Base Line
ELEC. = Electric
TELE = Telephone
T.H. = Test Hole
SW = Sidewalk
DW = Driveway
BM = Benchmark
C.B. = Catch Basin
GV = Gas Valve

Performing out-of-sight work...with vision!™

Note: To Eliminate mistakes and check this work, So-Deep suggests you scale and plot all dimensions onto the plans and review all elevations carefully. So-Deep is responsible only for information shown on our forms.

.08' = 1"
.16' = 2"
.25' = 3"
.33' = 4"
.42' = 5"
.50' = 6"
.58' = 7"
.67' = 8"
.75' = 9"
.83' = 10"
.92' = 11"

Sewer Manhole
Test Hole
Fire Hydrant
Pole
Fence Line
Electric Manhole
= T.S. = Traverse Station
Valve
Water Meter
Telephone Manhole
Telephone Pedestal

FILE NAME = D876A91-Sht-DET02.DGN	USER NAME = melopez	DESIGNED - JAR	REVISED -
		DRAWN - JAR	REVISED -
	PLOT SCALE = $SCALE$	CHECKED - LGP	REVISED -
	PLOT DATE = 3/17/2011	DATE -	REVISED -

STATE OF ILLINOIS
DEPARTMENT OF TRANSPORTATION

MISCELLANEOUS DETAILS
SO-DEEP TEST HOLE CERTIFICATION FORM

SCALE: | SHEET NO. OF SHEETS | STA. TO STA.

F.A.I. RTE.	SECTION	COUNTY	TOTAL SHEETS	SHEET NO.
270	60-1B-1	MADISON	712	538A

CONTRACT NO. 76A91

ILLINOIS FED. AID PROJECT

The Subsurface Utility Engineering Company
449 Munroe Falls Road
Tallmadge, OH 44278
(330) 794-4455

So-Deep Test Hole Certification Form

© So-Deep 1988, 1991

So-Deep, Corporate Office
8397 Euclid Avenue
Manassas Park, VA 20111
(703)361-6005

Control # **SIMB922**
Test Hole # **3**
Plan Scale **1"=50'**
Sheet # **11**
Proposed **BRIDGE REPLACEMENT**
Date **JULY 16, 2009**

Condition of paving prior to work **NO PAVING**

City, County, State **MADISON CO., IL**
Gen. Loc. **I-270 W.B. @ CHAIN OF ROCKS CANAL**
Recorded Size/Material/Type **14" (O.D.) COATED STEEL (EXPLORER) GAS LINE**
Foreman/Truck#/Form By **J. CLINE / 219 / P. REYNOLDS**

B.M. 1 Elev. = **429.36'**
IS **GIVEN**

Description: **(BM 270-11) CHIS "[]" FOUND, CENTER OF CONC. PIER BASE FOR E.B. I-270, JUST E OF EAST BANK, CHAIN OF**

B.M. 2 Elev. = **429.36'**
IS **CALCULATED**

Description: **CHIS "X" SET NE CORNER OF CONC. PIER BASE FOR W.B. I-270, JUST E OF EAST BANK, CHAIN OF ROCKS CANAL**

Benchmarks check **BY 0.00'**
Elevations are referenced to **B.M.#1**

SO-DEEP will attempt to use the BM/HI most applicable to your design. If however, BMs differ by more than .05', resulting differences could cause design conflicts.

Recorded Size/Type of utility **WAS FOUND**

There **WERE NOT** additional utilities in the test hole

The utility **WAS** in good condition.

Paving Thickness and type **NO PAVING**

Color of ribbon installed **YELLOW**

Soil Type **MOIST SAND**

Field Condition **GRASS R/W**

T.H. tied to **PEG**

14" COATED STEEL (EXPLORER) GAS LINE
Size/Material/Type
Portion of pipe exposed for O.D. measurement:
FULL

Remarks: NONE

Facing **NORTHEAST**

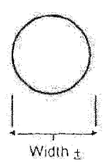

Existing Grade of **GRASS R/W**

Survey Mark **PEG**
(set by SO-DEEP)
Elev. **423.03'**

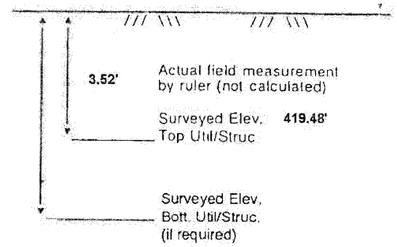

TH DUG 190.8'± LT OF CL STA 206+53.3±, I-270

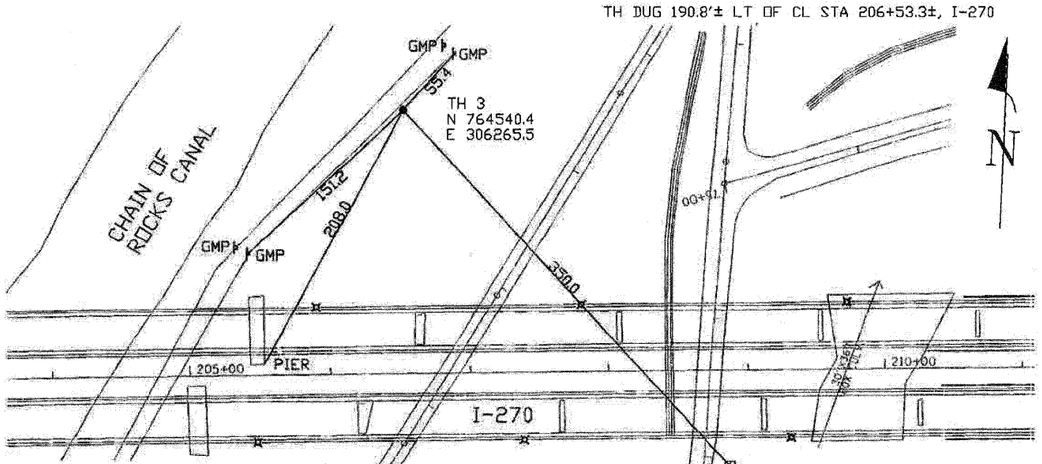

R/W	= Rights of Way	T.C.	= Terra Cotta
N.T.S.	= Not to Scale	PLAS.	= Plastic
✳	= Not Shown on Plan	BL	= Base Line
PCC	= Precast Concrete	ELEC.	= Electric
COND.	= Conduit	TELE	= Telephone
CONC.	= Concrete	T.H.	= Test Hole
O.D.	= Outside Diameter	SW	= Sidewalk
C.I.	= Cast Iron	DW	= Driveway
D.I.	= Ductile Iron	BM	= Benchmark
RPC	= Rough Pour Concrete	C.B.	= Catch Basin
CL	= Centerline	GV	= Gas Valve

Performing out-of-sight work...with vision!™

Note: To Eliminate mistakes and check this work, So-Deep suggests you scale and plot all dimensions onto the plans and review all elevations carefully. So-Deep is responsible only for information shown on our forms.

.08' = 1"	Sewer Manhole
.16' = 2"	Test Hole
.25' = 3"	Fire Hydrant
.33' = 4"	Pole
.42' = 5"	Fence Line
.50' = 6"	Electric Manhole
.58' = 7"	= T.S. = Traverse Station
.67' = 8"	Valve
.75' = 9"	Water Meter
.83' = 10"	Telephone Manhole
.92' = 11"	Telephone Pedestal

The Subsurface Utility Engineering Company
449 Munroe Falls Road
Tallmadge, OH 44278
(330) 794-4455

So-Deep Test Hole Certification Form

© So-Deep 1988, 1991

So-Deep, Corporate Office
8397 Euclid Avenue
Manassas Park, VA 20111
(703)361-6005

Control # **SIMB922**
Test Hole # **4**
Plan Scale **1"=50'**
Sheet # **11**
Proposed **BRIDGE REPLACEMENT**
Date **JULY 16, 2009**

Condition of paving prior to work **NO PAVING**

City, County, State **MADISON CO., IL**
Gen. Loc. **I-270 W.B. @ CHAIN OF ROCKS CANAL**
Recorded Size/Material/Type **6" COATED STEEL (BUCKEYE) GAS LINE**
Foreman/Truck#/Form By **J. CLINE / 219 / P. REYNOLDS**

B.M. 1 Elev. = **429.36'**
IS **GIVEN**

Description: **(BM 270-11) CHIS "[]" FOUND, CENTER OF CONC. PIER BASE FOR E.B. I-270, JUST E OF EAST BANK, CHAIN OF**

B.M. 2 Elev. = **429.36'**
IS **CALCULATED**

Description: **CHIS "X" SET NE CORNER OF CONC. PIER BASE FOR W.B. I-270, JUST E OF EAST BANK, CHAIN OF ROCKS CANAL**

Benchmarks check **BY 0.00'**
Elevations are referenced to **B.M.#1**

SO-DEEP will attempt to use the BM/HI most applicable to your design. If however, BMs differ by more than .05', resulting differences could cause design conflicts.

Recorded Size/Type of utility **WAS FOUND**

There **WERE NOT** additional utilities in the test hole

The utility **WAS** in good condition.

Paving Thickness and type **NO PAVING**

Color of ribbon installed **YELLOW**

Soil Type **MOIST SAND**

Field Condition **GRASS R/W**

T.H. tied to **PEG**

7" COATED STEEL (BUCKEYE) GAS LINE
Size/Material/Type
Portion of pipe exposed for O.D. measurement:
FULL

Remarks: NONE

Facing **NORTHEAST**

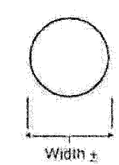

Existing Grade of **GRASS R/W**

Survey Mark **PEG**
(set by SO-DEEP)
Elev. **423.08'**

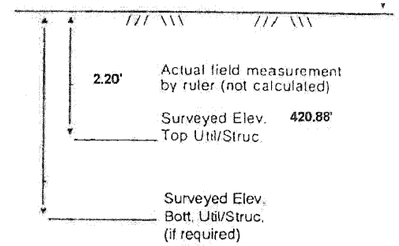

TH DUG 196.6'± LT OF CL STA 206+40.6±, I-270

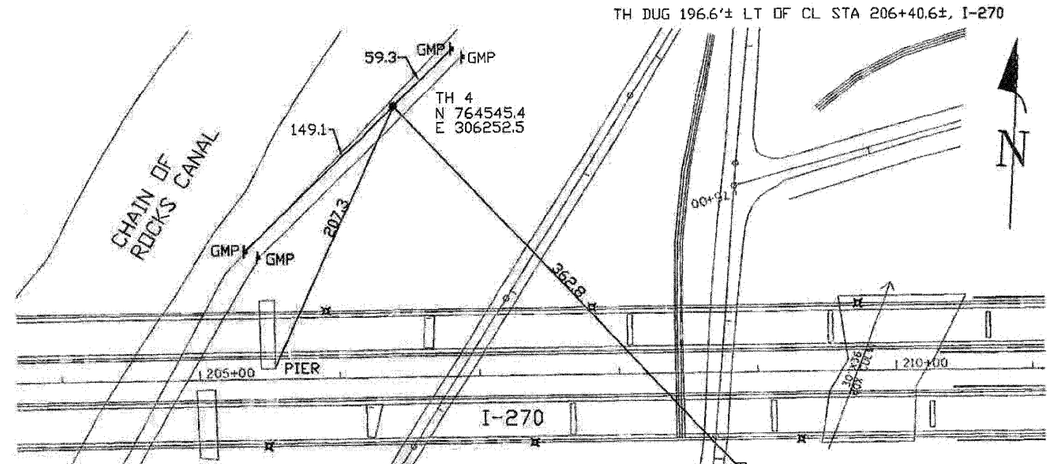

R/W	= Rights of Way	T.C.	= Terra Cotta
N.T.S.	= Not to Scale	PLAS.	= Plastic
✳	= Not Shown on Plan	BL	= Base Line
PCC	= Precast Concrete	ELEC.	= Electric
COND.	= Conduit	TELE	= Telephone
CONC.	= Concrete	T.H.	= Test Hole
O.D.	= Outside Diameter	SW	= Sidewalk
C.I.	= Cast Iron	DW	= Driveway
D.I.	= Ductile Iron	BM	= Benchmark
RPC	= Rough Pour Concrete	C.B.	= Catch Basin
CL	= Centerline	GV	= Gas Valve

Performing out-of-sight work...with vision!™

Note: To Eliminate mistakes and check this work, So-Deep suggests you scale and plot all dimensions onto the plans and review all elevations carefully. So-Deep is responsible only for information shown on our forms.

.08' = 1"	Sewer Manhole
.16' = 2"	Test Hole
.25' = 3"	Fire Hydrant
.33' = 4"	Pole
.42' = 5"	Fence Line
.50' = 6"	Electric Manhole
.58' = 7"	= T.S. = Traverse Station
.67' = 8"	Valve
.75' = 9"	Water Meter
.83' = 10"	Telephone Manhole
.92' = 11"	Telephone Pedestal

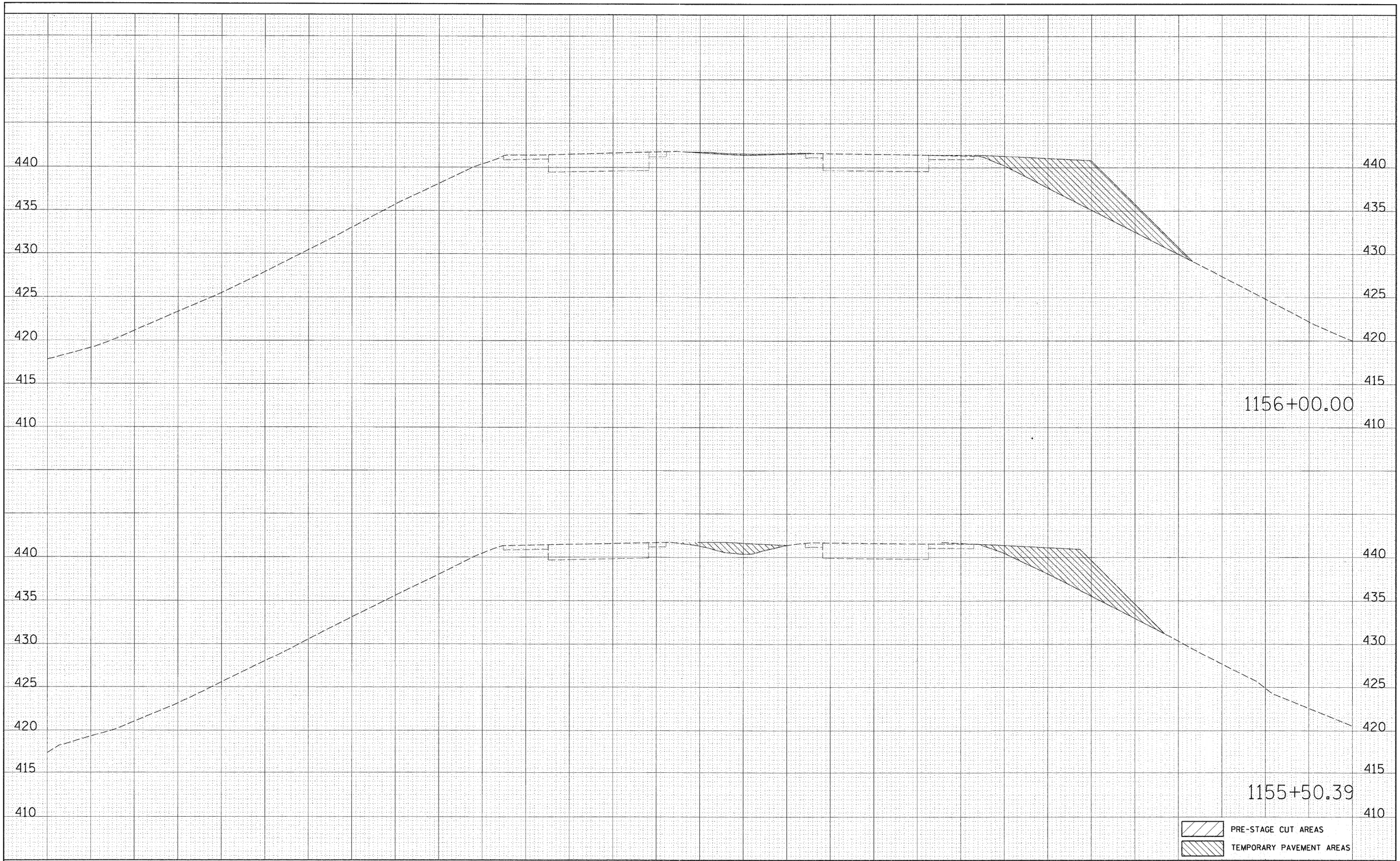

FINAL SURVEY	BY	DATE
SURVEYED		
PLOTTED		
TEMPLATE		
AREAS		
AREAS CHECKED		
NOTE BOOK NO.		

ORIGINAL SURVEY	BY	DATE
SURVEYED		
PLOTTED		
TEMPLATE		
AREAS		
AREAS CHECKED		
NOTE BOOK NO.		

FILE NAME = D876D91-sht-xs-270.dgn	USER NAME = malopez	DESIGNED SJM	REVISED -
		DRAWN BAH	REVISED -
	PLOT SCALE = $SCALE$	CHECKED -	REVISED -
	PLOT DATE = 3/17/2011	DATE -	REVISED -

STATE OF ILLINOIS
DEPARTMENT OF TRANSPORTATION

CROSS SECTIONS
INTERSTATE I-270

SCALE: | SHEET NO. OF SHEETS | STA. 1155+50.39 TO STA. 1156+00.00

F.A.I. RTE.	SECTION	COUNTY	TOTAL SHEETS	SHEET NO.
270	60-1B-1	MADISON	712	539

CONTRACT NO. 76A91

ILLINOIS FED. AID PROJECT

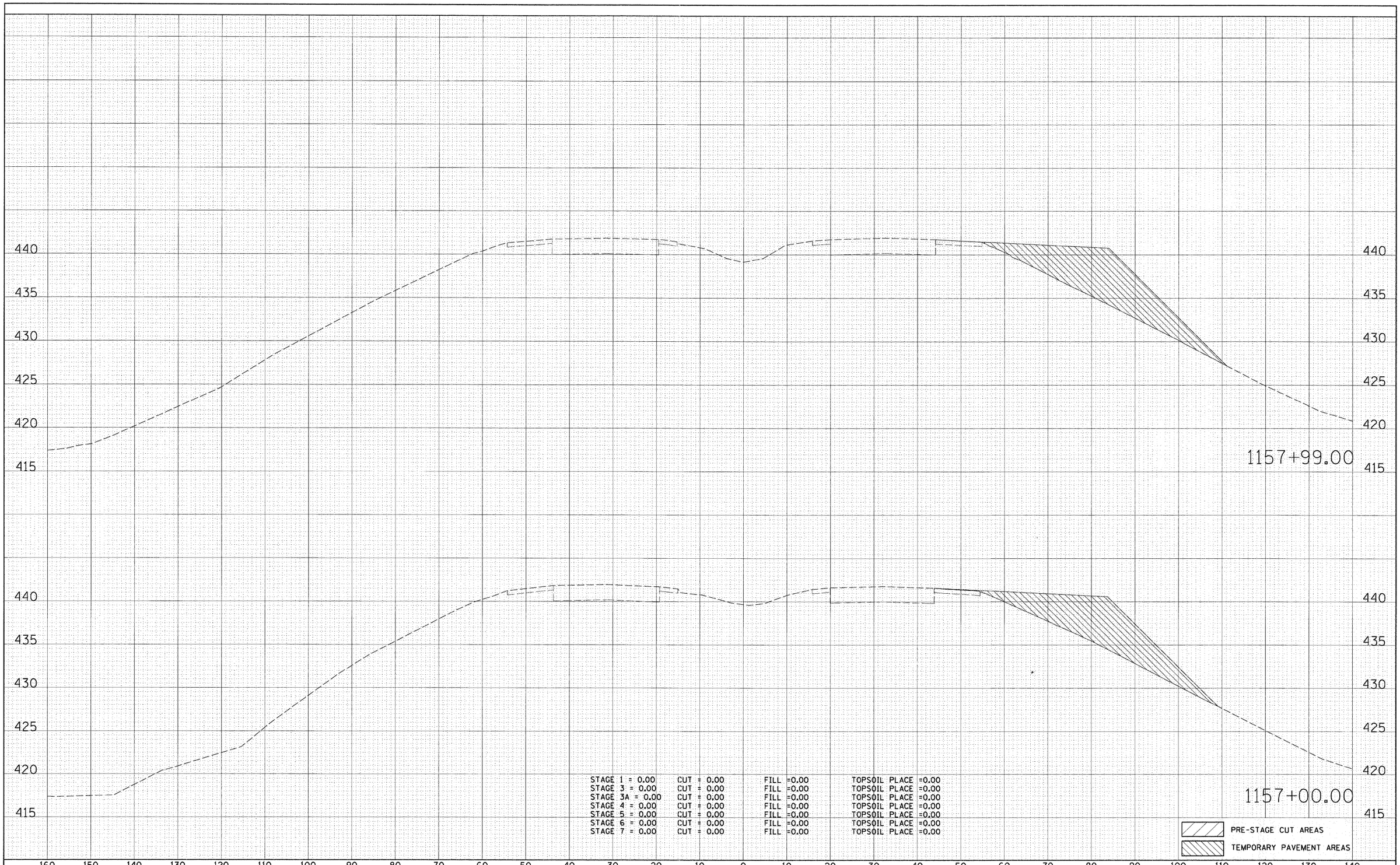

	CUT	FILL	TOPSOIL PLACE
STAGE 1 = 0.00	CUT = 0.00	FILL =0.00	TOPSOIL PLACE =0.00
STAGE 3 = 0.00	CUT = 0.00	FILL =0.00	TOPSOIL PLACE =0.00
STAGE 3A = 0.00	CUT = 0.00	FILL =0.00	TOPSOIL PLACE =0.00
STAGE 4 = 0.00	CUT = 0.00	FILL =0.00	TOPSOIL PLACE =0.00
STAGE 5 = 0.00	CUT = 0.00	FILL =0.00	TOPSOIL PLACE =0.00
STAGE 6 = 0.00	CUT = 0.00	FILL =0.00	TOPSOIL PLACE =0.00
STAGE 7 = 0.00	CUT = 0.00	FILL =0.00	TOPSOIL PLACE =0.00

FINAL SURVEY	BY	DATE
SURVEYED		
PLOTTED		
TEMPLATE		
AREAS		
AREAS CHECKED		
NOTE BOOK NO.		

ORIGINAL SURVEY	BY	DATE
SURVEYED		
PLOTTED		
TEMPLATE		
AREAS		
AREAS CHECKED		
NOTE BOOK NO.		

FILE NAME = D876D91-sht-xs-270.dgn

USER NAME = malopez

PLOT SCALE = $SCALE$

PLOT DATE = 3/17/2011

DESIGNED SJM	REVISED -	
DRAWN BAH	REVISED -	
CHECKED -	REVISED -	
DATE -	REVISED -	

STATE OF ILLINOIS
DEPARTMENT OF TRANSPORTATION

CROSS SECTIONS
INTERSTATE I-270

SCALE: | SHEET NO. OF SHEETS | STA. 1157+00.00 TO STA. 1157+99.00

F.A.I. RTE.	SECTION	COUNTY	TOTAL SHEETS	SHEET NO.
270	60-1B-1	MADISON	712	540
		CONTRACT NO. 76A91		
		ILLINOIS FED. AID PROJECT		

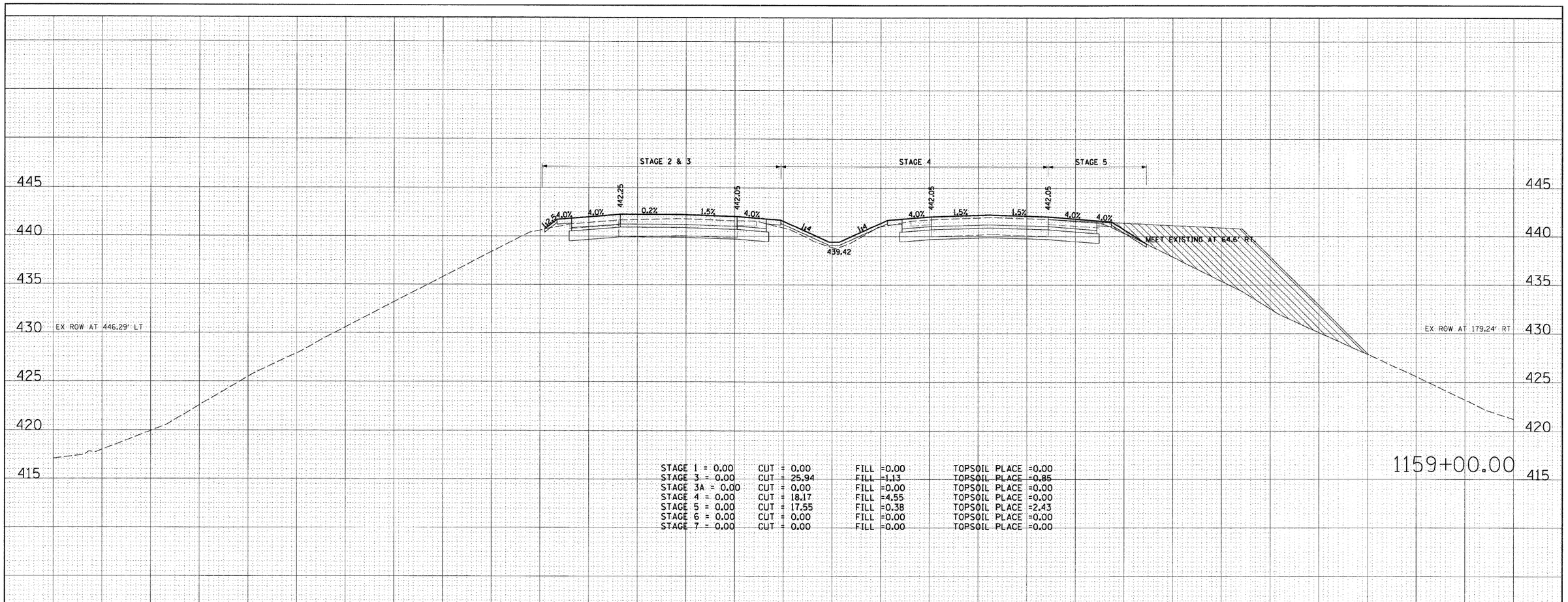

STAGE 1 = 0.00	CUT = 0.00	FILL =0.00	TOPSOIL PLACE =0.00
STAGE 3 = 0.00	CUT = 25.94	FILL =1.13	TOPSOIL PLACE =0.85
STAGE 3A = 0.00	CUT = 0.00	FILL =0.00	TOPSOIL PLACE =0.00
STAGE 4 = 0.00	CUT = 18.17	FILL =4.55	TOPSOIL PLACE =0.00
STAGE 5 = 0.00	CUT = 17.55	FILL =0.38	TOPSOIL PLACE =2.43
STAGE 6 = 0.00	CUT = 0.00	FILL =0.00	TOPSOIL PLACE =0.00
STAGE 7 = 0.00	CUT = 0.00	FILL =0.00	TOPSOIL PLACE =0.00

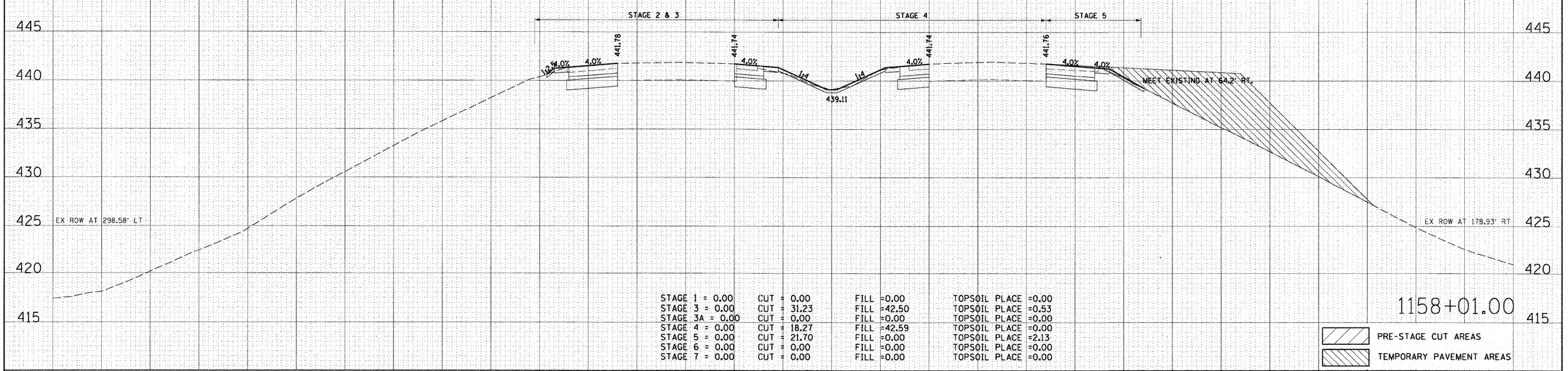

STAGE 1 = 0.00	CUT = 0.00	FILL =0.00	TOPSOIL PLACE =0.00
STAGE 3 = 0.00	CUT = 31.23	FILL =42.50	TOPSOIL PLACE =0.53
STAGE 3A = 0.00	CUT = 0.00	FILL =0.00	TOPSOIL PLACE =0.00
STAGE 4 = 0.00	CUT = 18.27	FILL =42.59	TOPSOIL PLACE =0.00
STAGE 5 = 0.00	CUT = 21.70	FILL =0.00	TOPSOIL PLACE =2.13
STAGE 6 = 0.00	CUT = 0.00	FILL =0.00	TOPSOIL PLACE =0.00
STAGE 7 = 0.00	CUT = 0.00	FILL =0.00	TOPSOIL PLACE =0.00

PRE-STAGE CUT AREAS

TEMPORARY PAVEMENT AREAS

160 150 140 130 120 110 100 90 80 70 60 50 40 30 20 10 0 10 20 30 40 50 60 70 80 90 100 110 120 130 140

FILE NAME = D876D91-sht-xs-270.dgn	USER NAME = malopez	DESIGNED SJM	REVISED -
		DRAWN BAH	REVISED -
	PLOT SCALE = $SCALE$	CHECKED -	REVISED -
	PLOT DATE = 3/17/2011	DATE -	REVISED -

STATE OF ILLINOIS
DEPARTMENT OF TRANSPORTATION

CROSS SECTIONS
INTERSTATE I-270

SCALE: | SHEET NO. OF SHEETS | STA. 1158+01.00 TO STA. 1159+00.00

F.A.I. RTE.	SECTION	COUNTY	TOTAL SHEETS	SHEET NO.
270	60-1B-1	MADISON	712	541
		CONTRACT NO. 76A91		
		ILLINOIS FED. AID PROJECT		

FINAL SURVEY — NOTE BOOK NO. — SURVEYED / PLOTTED / TEMPLATE / AREAS / AREAS CHECKED — BY — DATE

ORIGINAL SURVEY — NOTE BOOK NO. — SURVEYED / PLOTTED / TEMPLATE / AREAS / AREAS CHECKED — BY — DATE

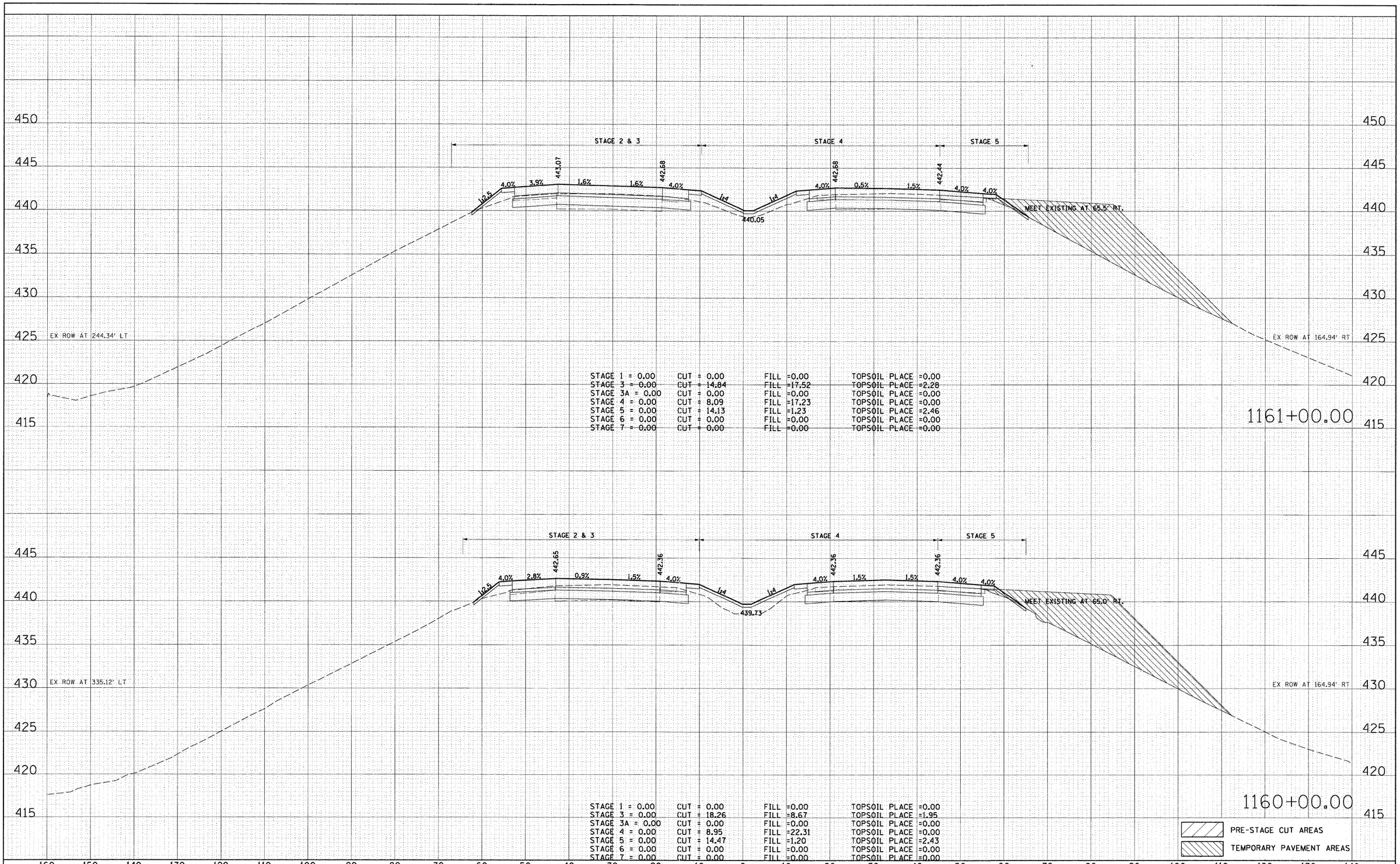

STAGE 1 = 0.00	CUT = 0.00	FILL =0.00	TOPSOIL PLACE =0.00
STAGE 3 = 0.00	CUT = 14.84	FILL =17.52	TOPSOIL PLACE =2.28
STAGE 3A = 0.00	CUT = 0.00	FILL =0.00	TOPSOIL PLACE =0.00
STAGE 4 = 0.00	CUT = 8.09	FILL =17.23	TOPSOIL PLACE =0.00
STAGE 5 = 0.00	CUT = 14.13	FILL =1.23	TOPSOIL PLACE =2.46
STAGE 6 = 0.00	CUT = 0.00	FILL =0.00	TOPSOIL PLACE =0.00
STAGE 7 = 0.00	CUT = 0.00	FILL =0.00	TOPSOIL PLACE =0.00

STAGE 1 = 0.00	CUT = 0.00	FILL =0.00	TOPSOIL PLACE =0.00
STAGE 3 = 0.00	CUT = 18.26	FILL =8.67	TOPSOIL PLACE =1.95
STAGE 3A = 0.00	CUT = 0.00	FILL =0.00	TOPSOIL PLACE =0.00
STAGE 4 = 0.00	CUT = 8.95	FILL =22.31	TOPSOIL PLACE =0.00
STAGE 5 = 0.00	CUT = 14.47	FILL =1.20	TOPSOIL PLACE =2.43
STAGE 6 = 0.00	CUT = 0.00	FILL =0.00	TOPSOIL PLACE =0.00
STAGE 7 = 0.00	CUT = 0.00	FILL =0.00	TOPSOIL PLACE =0.00

FINAL SURVEY	BY	DATE
SURVEYED		
PLOTTED		
TEMPLATE		
AREAS		
AREAS CHECKED		
NOTE BOOK NO.		

ORIGINAL SURVEY	BY	DATE
SURVEYED		
PLOTTED		
TEMPLATE		
AREAS		
AREAS CHECKED		
NOTE BOOK NO.		

FILE NAME = D876091-sht-xs-270.dgn	USER NAME = malopez	DESIGNED SJM	REVISED -
		DRAWN BAH	REVISED -
	PLOT SCALE = $SCALE$	CHECKED -	REVISED -
	PLOT DATE = 3/17/2011	DATE -	REVISED -

STATE OF ILLINOIS
DEPARTMENT OF TRANSPORTATION

CROSS SECTIONS
INTERSTATE I-270

SCALE: | SHEET NO. OF SHEETS | STA. 1160+00.00 TO STA. 1161+00.00

F.A.I. RTE.	SECTION	COUNTY	TOTAL SHEETS	SHEET NO.
270	60-1B-1	MADISON	712	542
		CONTRACT NO. 76A91		
		ILLINOIS FED. AID PROJECT		

FINAL SURVEY		BY	DATE
NOTE BOOK NO.	SURVEYED		
	PLOTTED		
	TEMPLATE		
	AREAS		
	AREAS CHECKED		

ORIGINAL SURVEY		BY	DATE
NOTE BOOK NO.	SURVEYED		
	PLOTTED		
	TEMPLATE		
	AREAS		
	AREAS CHECKED		

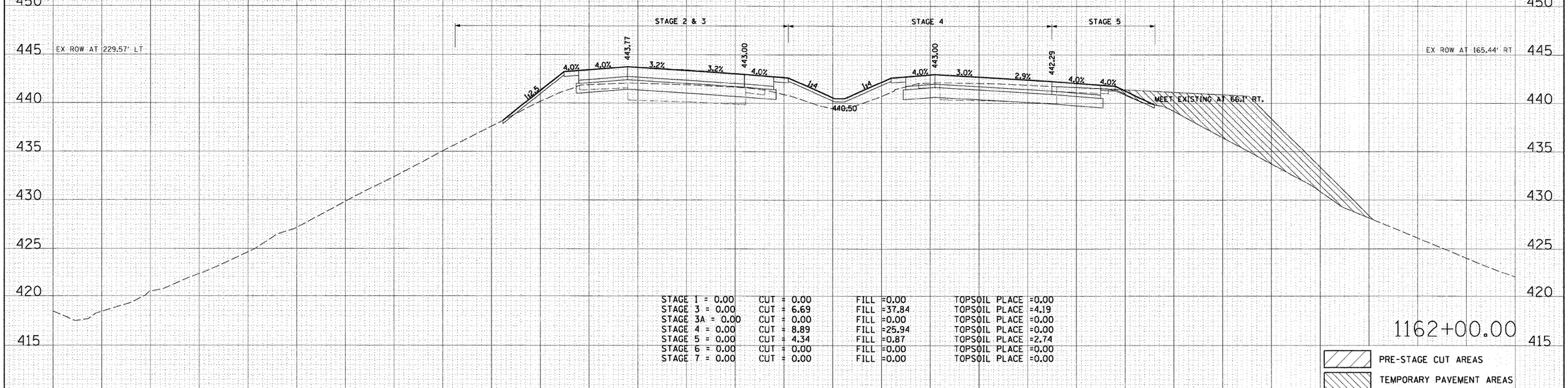

STAGE 1 = 0.00	CUT = 0.00	FILL =0.00	TOPSOIL PLACE =0.00
STAGE 3 = 0.00	CUT = 6.69	FILL =37.84	TOPSOIL PLACE =4.19
STAGE 3A = 0.00	CUT = 0.00	FILL =0.00	TOPSOIL PLACE =0.00
STAGE 4 = 0.00	CUT = 8.89	FILL =25.94	TOPSOIL PLACE =0.00
STAGE 5 = 0.00	CUT = 4.34	FILL =0.87	TOPSOIL PLACE =2.74
STAGE 6 = 0.00	CUT = 0.00	FILL =0.00	TOPSOIL PLACE =0.00
STAGE 7 = 0.00	CUT = 0.00	FILL =0.00	TOPSOIL PLACE =0.00

1162+00.00

PRE-STAGE CUT AREAS

TEMPORARY PAVEMENT AREAS

FILE NAME = D876091-sht-xs-270.dgn	USER NAME = malopez	DESIGNED SJM	REVISED -
		DRAWN BAH	REVISED -
	PLOT SCALE = $SCALE$	CHECKED -	REVISED -
	PLOT DATE = 3/17/2011	DATE -	REVISED -

STATE OF ILLINOIS
DEPARTMENT OF TRANSPORTATION

CROSS SECTIONS
INTERSTATE I-270

SCALE: | SHEET NO. OF SHEETS | STA. 1162+00.00 TO STA. 1162+00.00

F.A.I. RTE.	SECTION	COUNTY	TOTAL SHEETS	SHEET NO.
270	60-1B-1	MADISON	712	543

CONTRACT NO. 76A91

ILLINOIS FED. AID PROJECT

FINAL SURVEY		BY	DATE
NOTE BOOK NO.	SURVEYED		
	PLOTTED		
	TEMPLATE		
	AREAS		
	AREAS CHECKED		

ORIGINAL SURVEY		BY	DATE
NOTE BOOK NO.	SURVEYED		
	PLOTTED		
	TEMPLATE		
	AREAS		
	AREAS CHECKED		

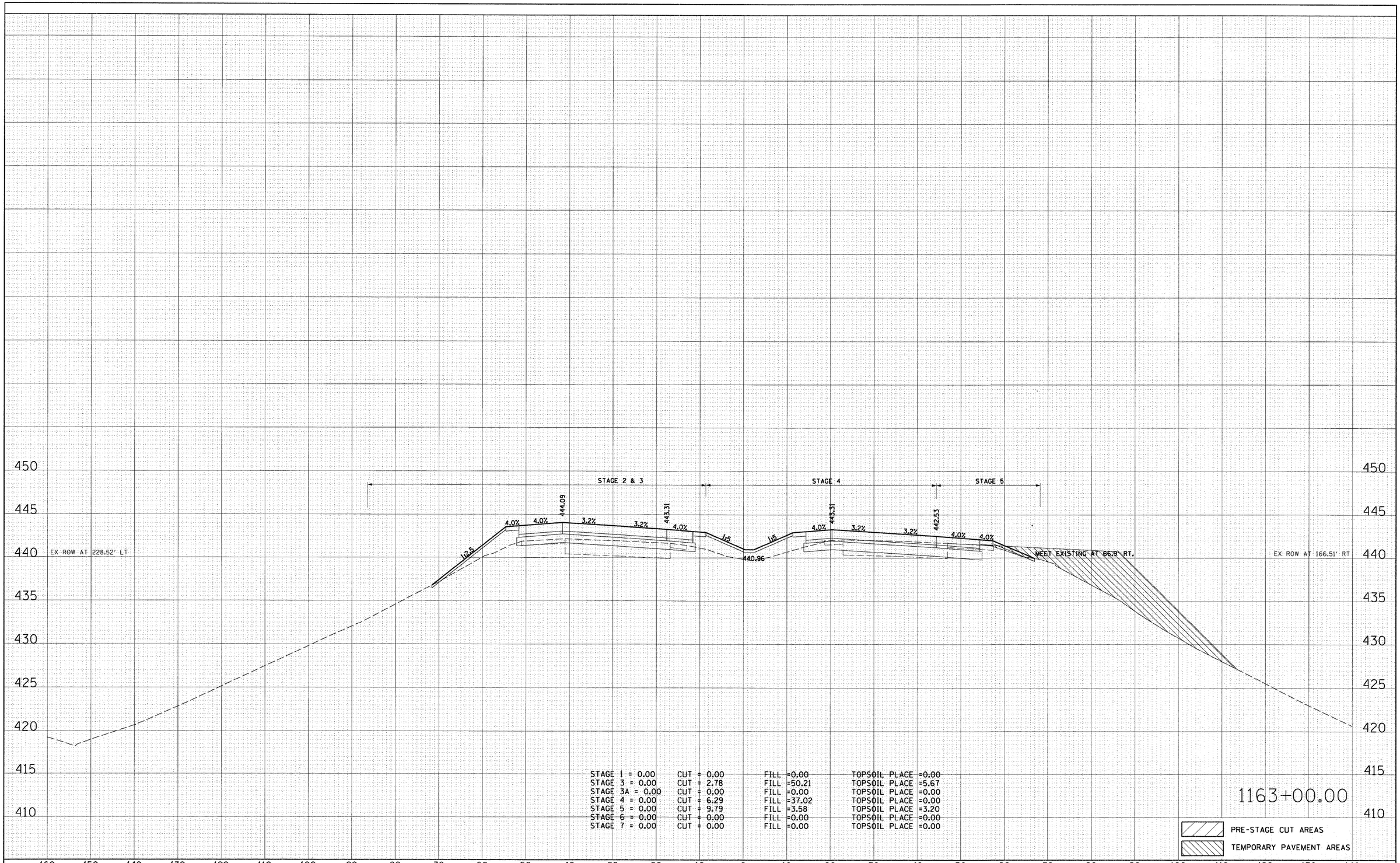

STAGE 1 = 0.00 CUT = 0.00 FILL =0.00 TOPSOIL PLACE =0.00
STAGE 3 = 0.00 CUT = 2.78 FILL =50.21 TOPSOIL PLACE =5.67
STAGE 3A = 0.00 CUT = 0.00 FILL =0.00 TOPSOIL PLACE =0.00
STAGE 4 = 0.00 CUT = 6.29 FILL =37.02 TOPSOIL PLACE =0.00
STAGE 5 = 0.00 CUT = 9.79 FILL =3.58 TOPSOIL PLACE =3.20
STAGE 6 = 0.00 CUT = 0.00 FILL =0.00 TOPSOIL PLACE =0.00
STAGE 7 = 0.00 CUT = 0.00 FILL =0.00 TOPSOIL PLACE =0.00

FILE NAME = D876D91-sht-xs-270.dgn	USER NAME = malopez	DESIGNED SJM	REVISED -
		DRAWN BAH	REVISED -
	PLOT SCALE = $SCALE$	CHECKED -	REVISED -
	PLOT DATE = 3/17/2011	DATE -	REVISED -

STATE OF ILLINOIS
DEPARTMENT OF TRANSPORTATION

CROSS SECTIONS
INTERSTATE I-270

SCALE: SHEET NO. OF SHEETS STA. 1163+00.00 TO STA. 1163+00.00

F.A.I. RTE.	SECTION	COUNTY	TOTAL SHEETS	SHEET NO.
270	60-1B-1	MADISON	712	544

CONTRACT NO. 76A91

ILLINOIS FED. AID PROJECT

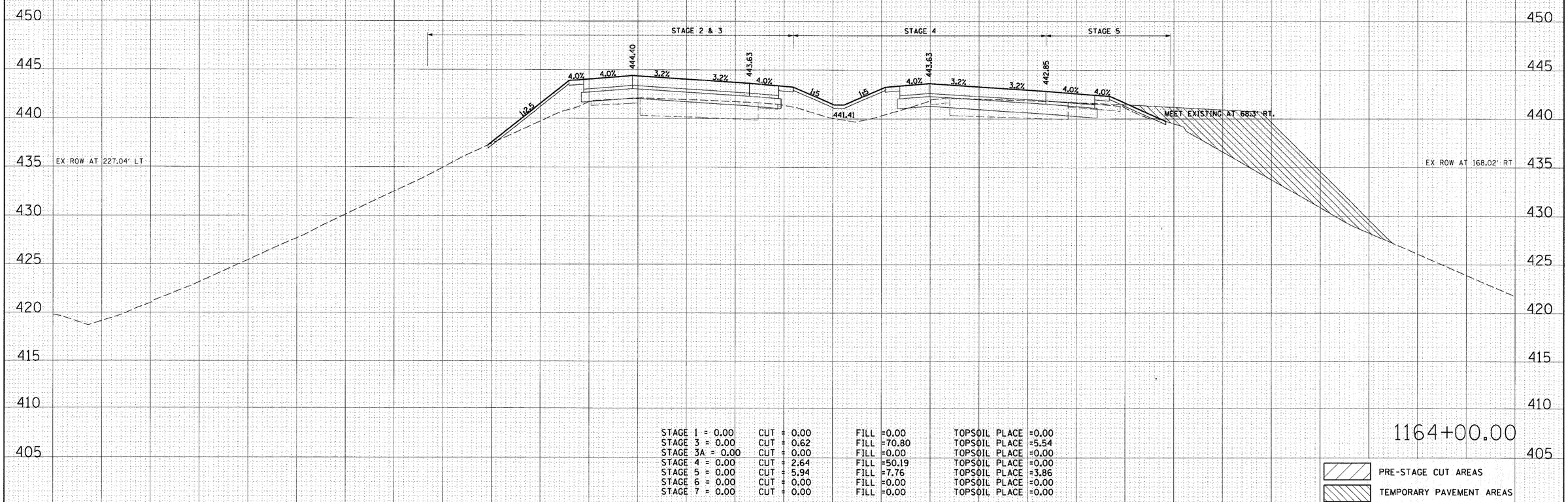

STAGE 1 = 0.00 CUT = 0.00 FILL =0.00 TOPSOIL PLACE =0.00
STAGE 3 = 0.00 CUT = 0.62 FILL =70.80 TOPSOIL PLACE =5.54
STAGE 3A = 0.00 CUT = 0.00 FILL =0.00 TOPSOIL PLACE =0.00
STAGE 4 = 0.00 CUT = 2.64 FILL =50.19 TOPSOIL PLACE =0.00
STAGE 5 = 0.00 CUT = 5.94 FILL =7.76 TOPSOIL PLACE =3.86
STAGE 6 = 0.00 CUT = 0.00 FILL =0.00 TOPSOIL PLACE =0.00
STAGE 7 = 0.00 CUT = 0.00 FILL =0.00 TOPSOIL PLACE =0.00

1164+00.00

PRE-STAGE CUT AREAS

TEMPORARY PAVEMENT AREAS

FINAL SURVEY	BY	DATE
SURVEYED		
PLOTTED		
TEMPLATE		
AREAS		
AREAS CHECKED		
NOTE BOOK NO.		

ORIGINAL SURVEY	BY	DATE
SURVEYED		
PLOTTED		
TEMPLATE		
AREAS		
AREAS CHECKED		
NOTE BOOK NO.		

FILE NAME = D876091-sht-xs-270.dgn	USER NAME = malopez	DESIGNED SJM	REVISED -
		DRAWN BAH	REVISED -
	PLOT SCALE = $SCALE$	CHECKED -	REVISED -
	PLOT DATE = 3/17/2011	DATE -	REVISED -

STATE OF ILLINOIS
DEPARTMENT OF TRANSPORTATION

CROSS SECTIONS
INTERSTATE I-270

SCALE: | SHEET NO. OF SHEETS | STA. 1164+00.00 TO STA. 1164+00.00

F.A.I. RTE.	SECTION	COUNTY	TOTAL SHEETS	SHEET NO.
270	60-1B-1	MADISON	712	545
		CONTRACT NO. 76A91		
		ILLINOIS FED. AID PROJECT		

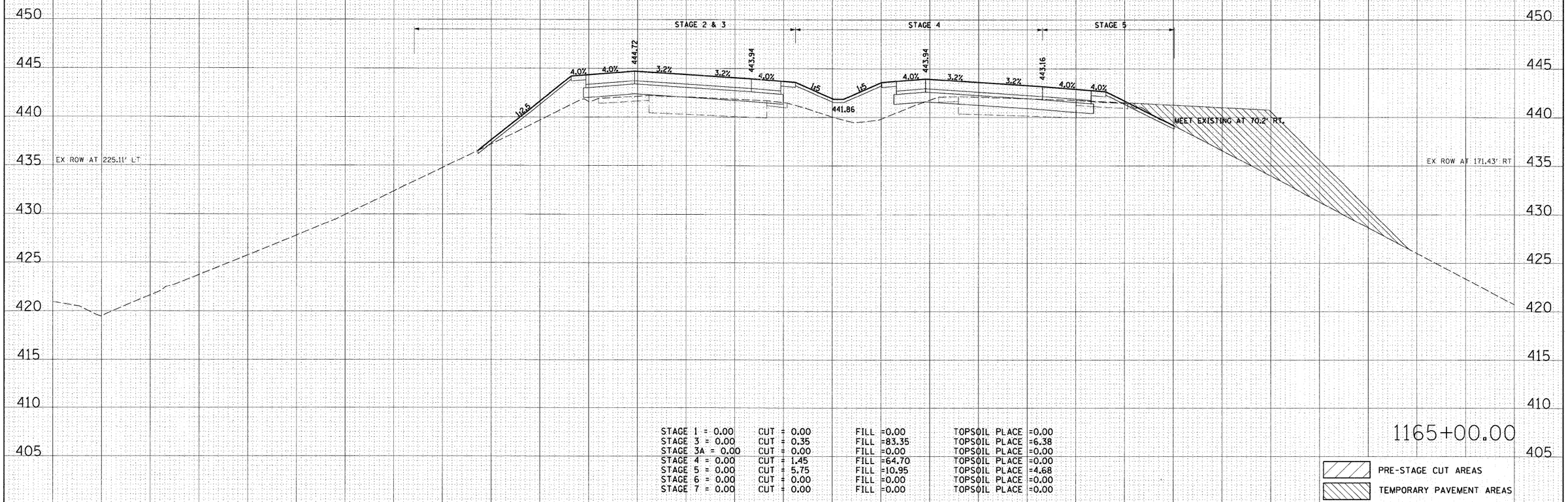

1165+00.00

STAGE 1 = 0.00	CUT = 0.00	FILL =0.00	TOPSOIL PLACE =0.00	
STAGE 3 = 0.00	CUT = 0.35	FILL =83.35	TOPSOIL PLACE =6.38	
STAGE 3A = 0.00	CUT = 0.00	FILL =0.00	TOPSOIL PLACE =0.00	
STAGE 4 = 0.00	CUT = 1.45	FILL =64.70	TOPSOIL PLACE =0.00	
STAGE 5 = 0.00	CUT = 5.75	FILL =10.95	TOPSOIL PLACE =4.68	
STAGE 6 = 0.00	CUT = 0.00	FILL =0.00	TOPSOIL PLACE =0.00	
STAGE 7 = 0.00	CUT = 0.00	FILL =0.00	TOPSOIL PLACE =0.00	

PRE-STAGE CUT AREAS

TEMPORARY PAVEMENT AREAS

FINAL SURVEY	BY	DATE
SURVEYED		
PLOTTED		
TEMPLATE		
AREAS		
AREAS CHECKED		
NOTE BOOK NO.		

ORIGINAL SURVEY	BY	DATE
SURVEYED		
PLOTTED		
TEMPLATE		
AREAS		
AREAS CHECKED		
NOTE BOOK NO.		

FILE NAME = D876091-sht-xs-270.dgn	USER NAME = malopez	DESIGNED SJM	REVISED -
		DRAWN BAH	REVISED -
	PLOT SCALE = $SCALE$	CHECKED -	REVISED -
	PLOT DATE = 3/17/2011	DATE -	REVISED -

STATE OF ILLINOIS
DEPARTMENT OF TRANSPORTATION

CROSS SECTIONS
INTERSTATE I-270

SCALE: | SHEET NO. OF SHEETS | STA. 1165+00.00 TO STA. 1165+00.00

F.A.I. RTE.	SECTION	COUNTY	TOTAL SHEETS	SHEET NO.
270	60-1B-1	MADISON	712	546

CONTRACT NO. 76A91

ILLINOIS FED. AID PROJECT

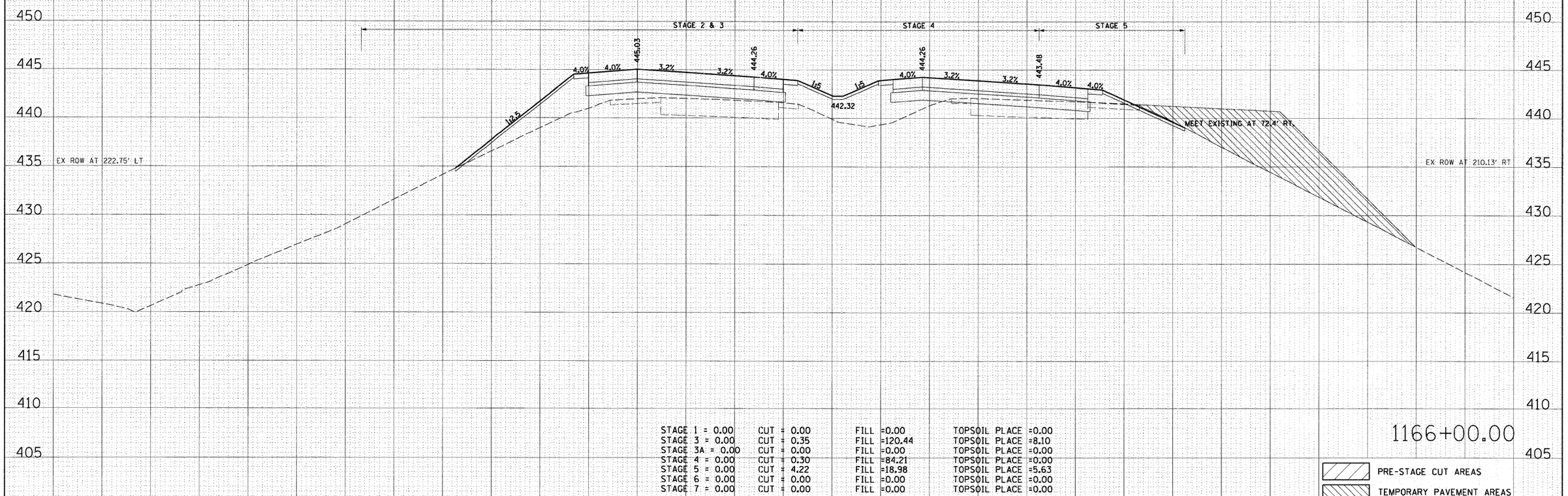

FINAL SURVEY	BY	DATE
SURVEYED		
PLOTTED		
TEMPLATE		
AREAS		
AREAS CHECKED		
NOTE BOOK NO.		

ORIGINAL SURVEY	BY	DATE
SURVEYED		
PLOTTED		
TEMPLATE		
AREAS		
AREAS CHECKED		
NOTE BOOK NO.		

FILE NAME = D876091-sht-xs-270.dgn	USER NAME = malopez	DESIGNED SJM	REVISED -
		DRAWN BAH	REVISED -
	PLOT SCALE = $SCALE$	CHECKED -	REVISED -
	PLOT DATE = 3/17/2011	DATE -	REVISED -

STATE OF ILLINOIS
DEPARTMENT OF TRANSPORTATION

CROSS SECTIONS
INTERSTATE I-270

SCALE: SHEET NO. OF SHEETS STA. 1166+00.00 TO STA. 1166+00.00

F.A.I. RTE.	SECTION	COUNTY	TOTAL SHEETS	SHEET NO.
270	60-1B-1	MADISON	712	547

CONTRACT NO. 76A91

ILLINOIS FED. AID PROJECT

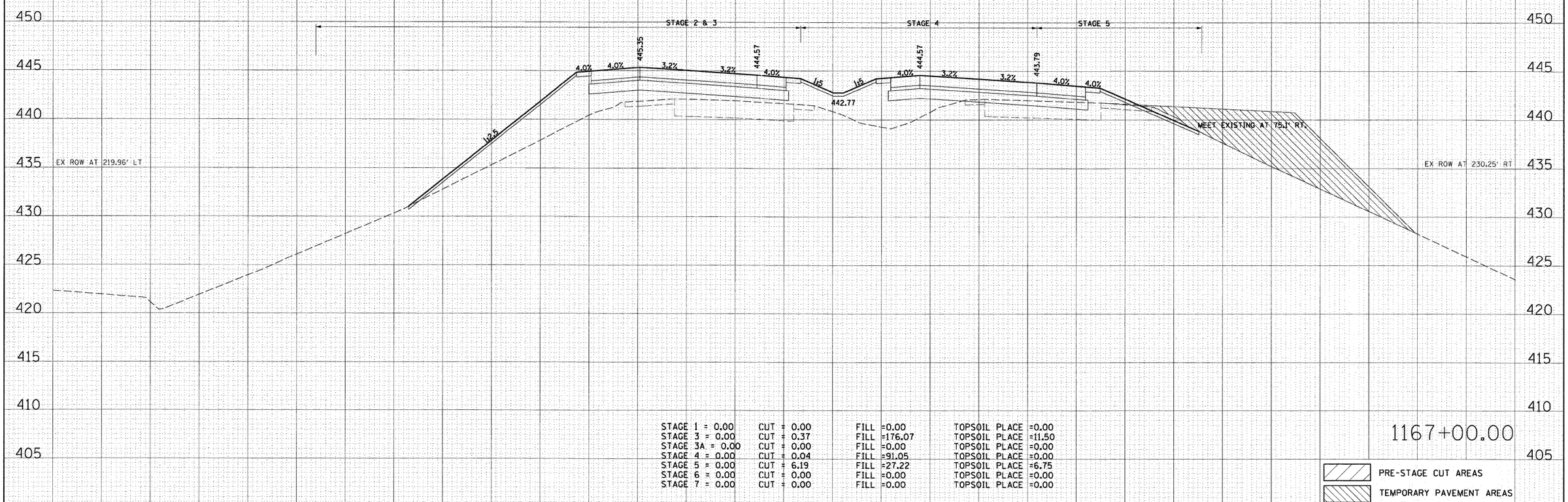

STAGE 1 = 0.00	CUT = 0.00	FILL =0.00	TOPSOIL PLACE =0.00
STAGE 3 = 0.00	CUT = 0.37	FILL =176.07	TOPSOIL PLACE =11.50
STAGE 3A = 0.00	CUT = 0.00	FILL =0.00	TOPSOIL PLACE =0.00
STAGE 4 = 0.00	CUT = 0.04	FILL =91.05	TOPSOIL PLACE =0.00
STAGE 5 = 0.00	CUT = 6.19	FILL =27.22	TOPSOIL PLACE =6.75
STAGE 6 = 0.00	CUT = 0.00	FILL =0.00	TOPSOIL PLACE =0.00
STAGE 7 = 0.00	CUT = 0.00	FILL =0.00	TOPSOIL PLACE =0.00

1167+00.00

PRE-STAGE CUT AREAS

TEMPORARY PAVEMENT AREAS

FINAL SURVEY	BY	DATE
SURVEYED		
PLOTTED		
TEMPLATE		
AREAS		
AREAS CHECKED		
NOTE BOOK NO.		

ORIGINAL SURVEY	BY	DATE
SURVEYED		
PLOTTED		
TEMPLATE		
AREAS		
AREAS CHECKED		
NOTE BOOK NO.		

FILE NAME = D876091-sht-xs-270.dgn	USER NAME = malopez	DESIGNED SJM	REVISED -
		DRAWN BAH	REVISED -
	PLOT SCALE = $SCALE$	CHECKED -	REVISED -
	PLOT DATE = 3/17/2011	DATE -	REVISED -

STATE OF ILLINOIS
DEPARTMENT OF TRANSPORTATION

CROSS SECTIONS
INTERSTATE I-270

SCALE: | SHEET NO. OF SHEETS | STA. 1167+00.00 TO STA. 1167+00.00

F.A.I. RTE.	SECTION	COUNTY	TOTAL SHEETS	SHEET NO.
270	60-IB-1	MADISON	712	548

CONTRACT NO. 76A91

ILLINOIS FED. AID PROJECT

FINAL SURVEY		BY	DATE
NOTE BOOK NO.	SURVEYED		
	PLOTTED		
	TEMPLATE		
	AREAS		
	AREAS CHECKED		

ORIGINAL SURVEY		BY	DATE
NOTE BOOK NO.	SURVEYED		
	PLOTTED		
	TEMPLATE		
	AREAS		
	AREAS CHECKED		

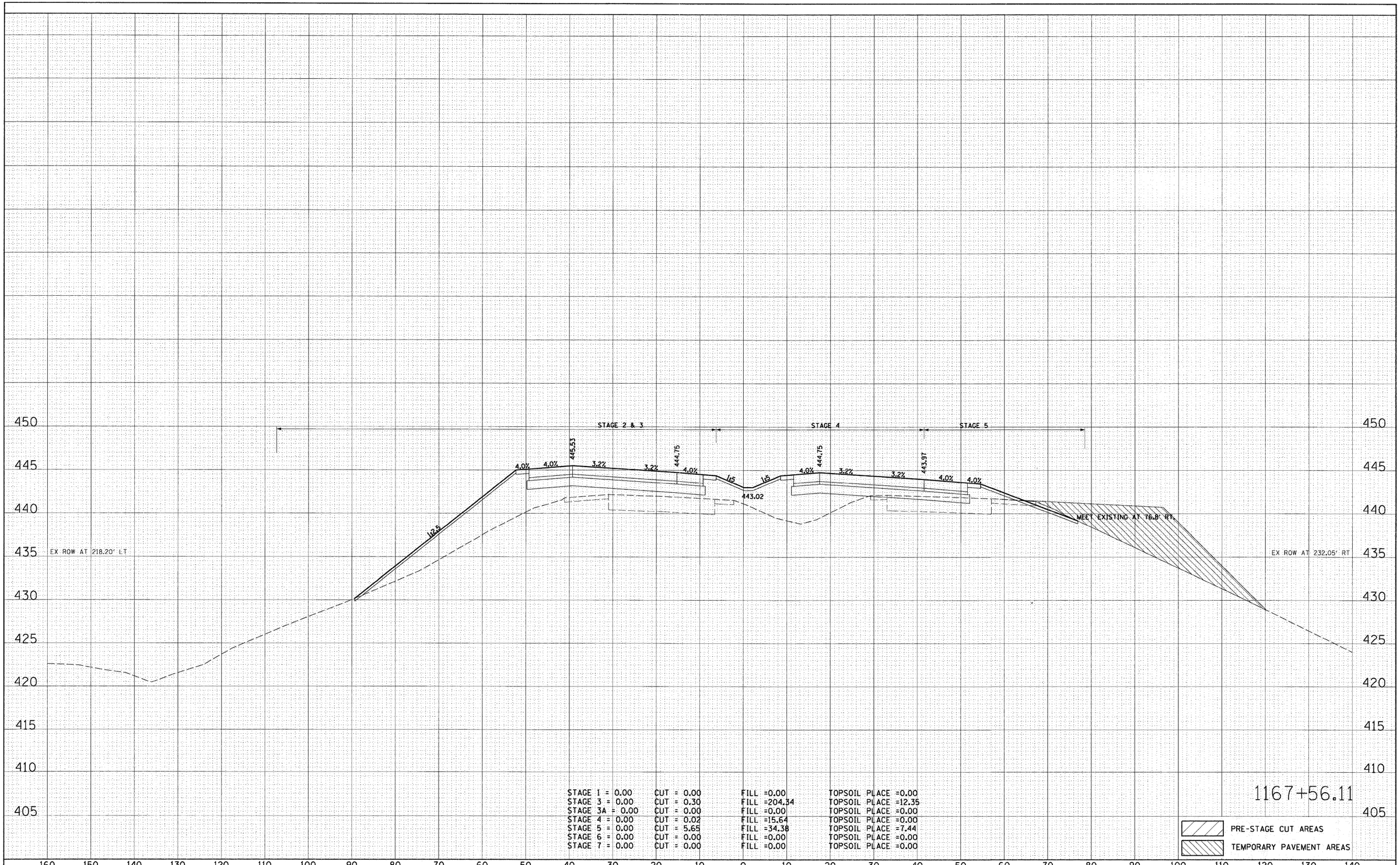

STAGE 1 = 0.00	CUT = 0.00	FILL =0.00	TOPSOIL PLACE =0.00
STAGE 3 = 0.00	CUT = 0.30	FILL =204.34	TOPSOIL PLACE =12.35
STAGE 3A = 0.00	CUT = 0.00	FILL =0.00	TOPSOIL PLACE =0.00
STAGE 4 = 0.00	CUT = 0.02	FILL =15.64	TOPSOIL PLACE =0.00
STAGE 5 = 0.00	CUT = 5.65	FILL =34.38	TOPSOIL PLACE =7.44
STAGE 6 = 0.00	CUT = 0.00	FILL =0.00	TOPSOIL PLACE =0.00
STAGE 7 = 0.00	CUT = 0.00	FILL =0.00	TOPSOIL PLACE =0.00

FILE NAME = D876D91-sht-xs-270.dgn	USER NAME = malopez	DESIGNED SJM	REVISED -
		DRAWN BAH	REVISED -
	PLOT SCALE = $SCALE$	CHECKED -	REVISED -
	PLOT DATE = 3/17/2011	DATE -	REVISED -

STATE OF ILLINOIS
DEPARTMENT OF TRANSPORTATION

CROSS SECTIONS
INTERSTATE I-270

SCALE: | SHEET NO. OF SHEETS | STA. 1167+56.11 TO STA. 1167+56.11

F.A.I. RTE.	SECTION	COUNTY	TOTAL SHEETS	SHEET NO.
270	60-1B-1	MADISON	712	549
		CONTRACT NO. 76A91		
		ILLINOIS FED. AID PROJECT		

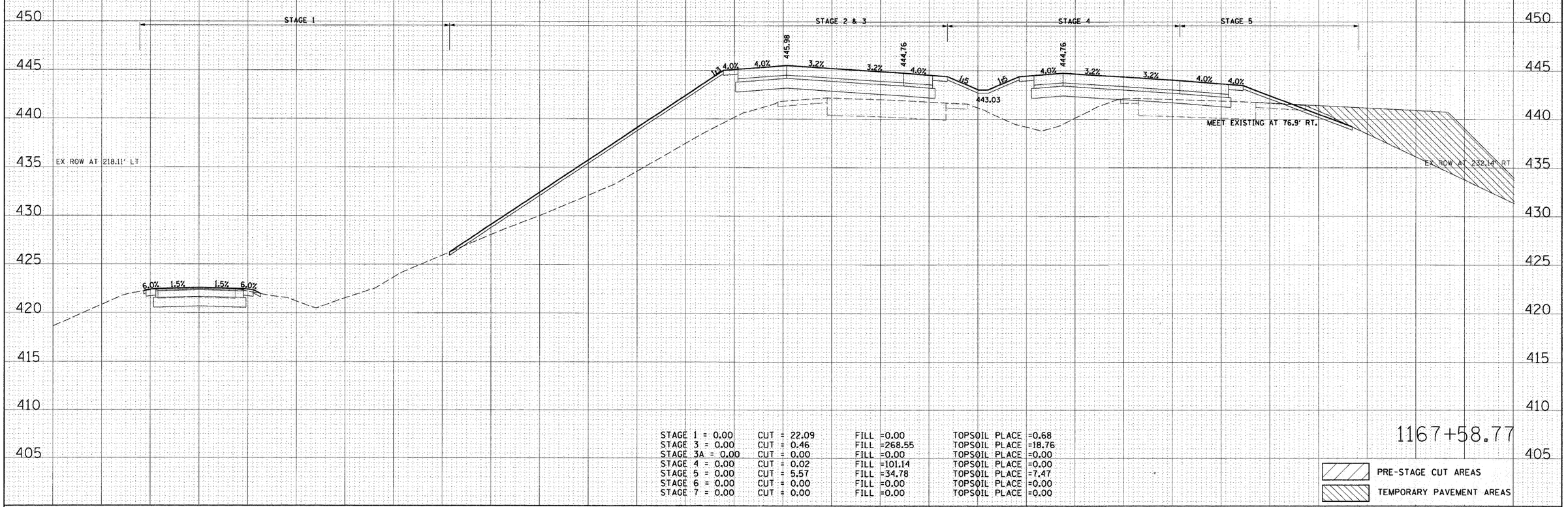

STAGE 1 = 0.00	CUT = 22.09	FILL =0.00	TOPSOIL PLACE =0.68		
STAGE 3 = 0.00	CUT = 0.46	FILL =268.55	TOPSOIL PLACE =18.76		
STAGE 3A = 0.00	CUT = 0.00	FILL =0.00	TOPSOIL PLACE =0.00		
STAGE 4 = 0.00	CUT = 0.02	FILL =101.14	TOPSOIL PLACE =0.00		
STAGE 5 = 0.00	CUT = 5.57	FILL =34.78	TOPSOIL PLACE =7.47		
STAGE 6 = 0.00	CUT = 0.00	FILL =0.00	TOPSOIL PLACE =0.00		
STAGE 7 = 0.00	CUT = 0.00	FILL =0.00	TOPSOIL PLACE =0.00		

FINAL SURVEY	BY	DATE
SURVEYED		
PLOTTED		
TEMPLATE		
AREAS		
AREAS CHECKED		
NOTE BOOK NO.		

ORIGINAL SURVEY	BY	DATE
SURVEYED		
PLOTTED		
TEMPLATE		
AREAS		
AREAS CHECKED		
NOTE BOOK NO.		

FILE NAME = D876D91-sht-xs-270.dgn	USER NAME = malopez	DESIGNED SJM	REVISED -
		DRAWN BAH	REVISED -
	PLOT SCALE = $SCALE$	CHECKED -	REVISED -
	PLOT DATE = 3/17/2011	DATE -	REVISED -

STATE OF ILLINOIS
DEPARTMENT OF TRANSPORTATION

CROSS SECTIONS
INTERSTATE I-270

SCALE: | SHEET NO. OF SHEETS | STA. 1167+58.77 TO STA. 1167+58.77

F.A.I. RTE.	SECTION	COUNTY	TOTAL SHEETS	SHEET NO.
270	60-1B-1	MADISON	712	550

CONTRACT NO. 76A91

ILLINOIS FED. AID PROJECT

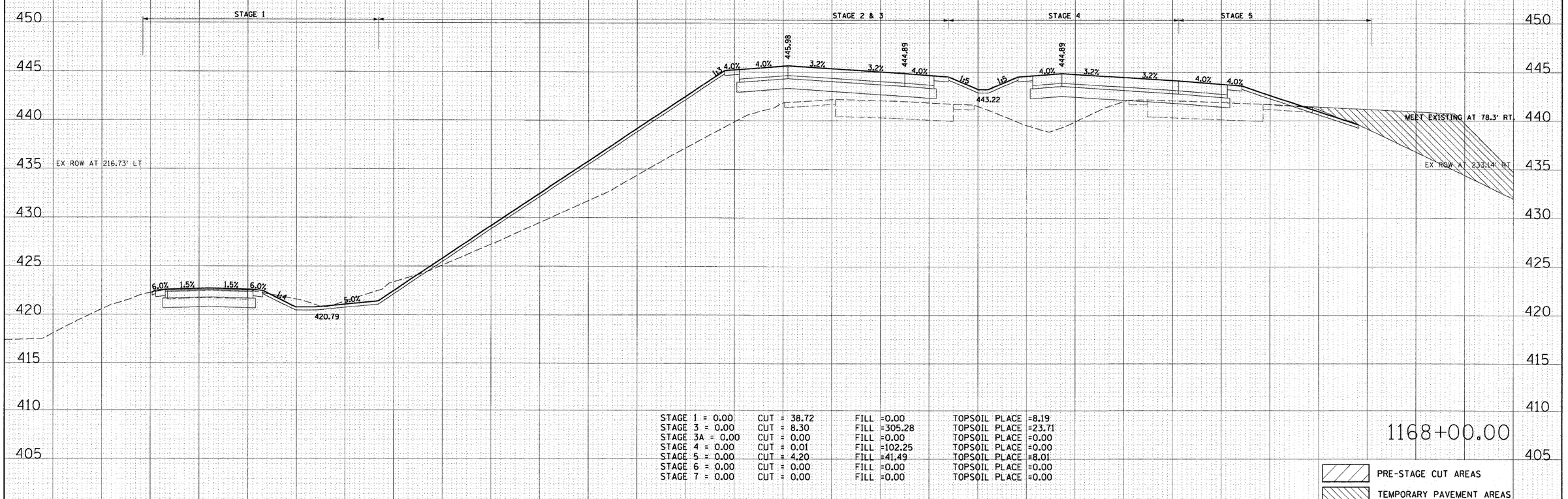

STAGE 1 = 0.00	CUT = 38.72	FILL =0.00	TOPSOIL PLACE =8.19		
STAGE 3 = 0.00	CUT = 8.30	FILL =305.28	TOPSOIL PLACE =23.71		
STAGE 3A = 0.00	CUT = 0.00	FILL =0.00	TOPSOIL PLACE =0.00		
STAGE 4 = 0.00	CUT = 0.01	FILL =102.25	TOPSOIL PLACE =0.00		
STAGE 5 = 0.00	CUT = 4.20	FILL =41.49	TOPSOIL PLACE =8.01		
STAGE 6 = 0.00	CUT = 0.00	FILL =0.00	TOPSOIL PLACE =0.00		
STAGE 7 = 0.00	CUT = 0.00	FILL =0.00	TOPSOIL PLACE =0.00		

1168+00.00

PRE-STAGE CUT AREAS

TEMPORARY PAVEMENT AREAS

FINAL SURVEY	BY	DATE
SURVEYED		
PLOTTED		
TEMPLATE		
AREAS		
AREAS CHECKED		
NOTE BOOK NO.		

ORIGINAL SURVEY	BY	DATE
SURVEYED		
PLOTTED		
TEMPLATE		
AREAS		
AREAS CHECKED		
NOTE BOOK NO.		

FILE NAME = D876D91-sht-xs-270.dgn	USER NAME = malopez	DESIGNED SJM	REVISED -
		DRAWN BAH	REVISED -
	PLOT SCALE = $SCALE$	CHECKED -	REVISED -
	PLOT DATE = 3/17/2011	DATE -	REVISED -

STATE OF ILLINOIS
DEPARTMENT OF TRANSPORTATION

CROSS SECTIONS
INTERSTATE I-270

SCALE: | SHEET NO. OF SHEETS | STA. 1168+00.00 TO STA. 1168+00.00

F.A.I. RTE.	SECTION	COUNTY	TOTAL SHEETS	SHEET NO.
270	60-1B-1	MADISON	712	551
		CONTRACT NO. 76A91		

ILLINOIS FED. AID PROJECT

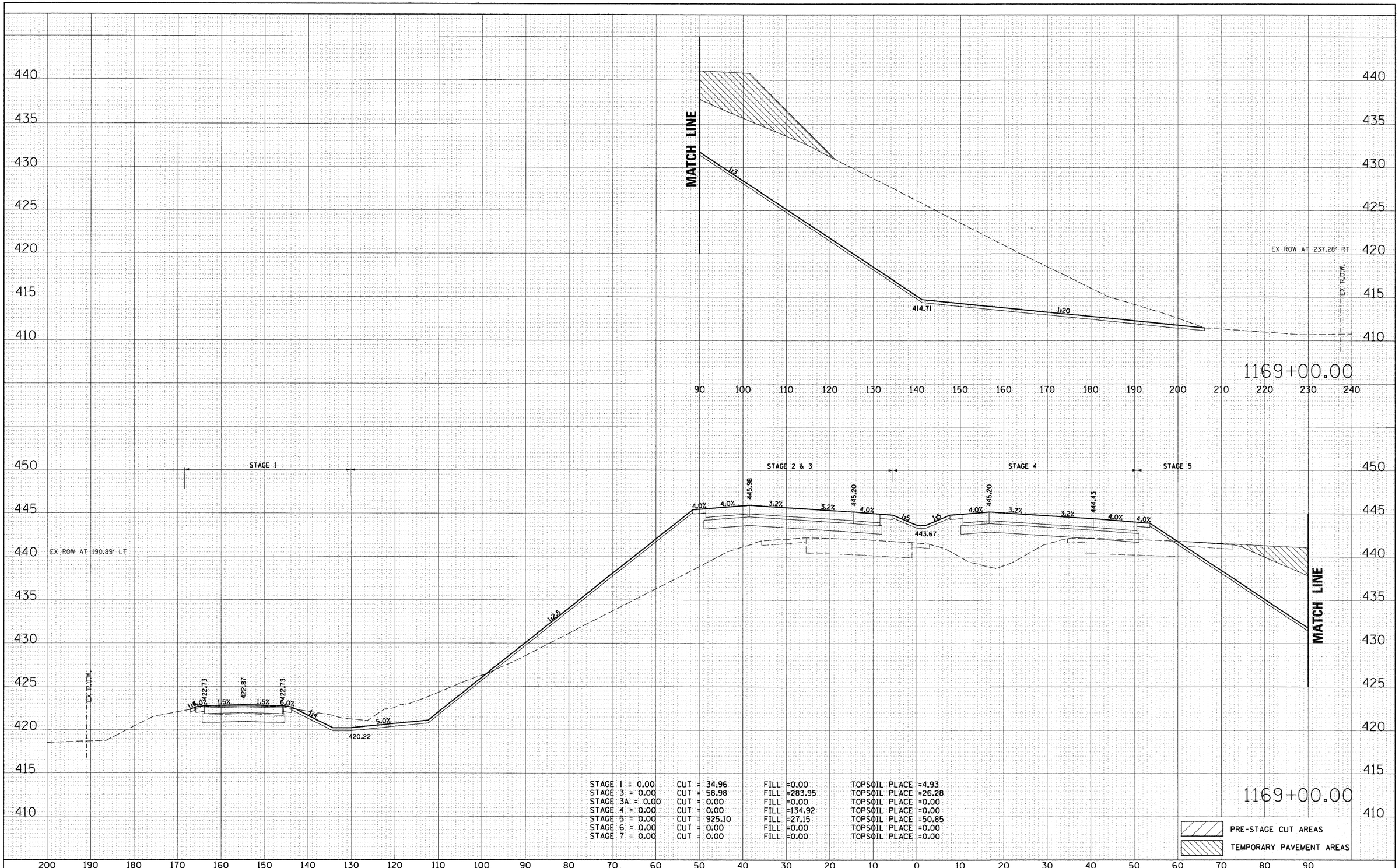

STAGE 1 = 0.00	CUT = 34.96	FILL =0.00	TOPSOIL PLACE =4.93
STAGE 3 = 0.00	CUT = 58.98	FILL =283.95	TOPSOIL PLACE =26.28
STAGE 3A = 0.00	CUT = 0.00	FILL =0.00	TOPSOIL PLACE =0.00
STAGE 4 = 0.00	CUT = 0.00	FILL =134.92	TOPSOIL PLACE =0.00
STAGE 5 = 0.00	CUT = 925.10	FILL =27.15	TOPSOIL PLACE =50.85
STAGE 6 = 0.00	CUT = 0.00	FILL =0.00	TOPSOIL PLACE =0.00
STAGE 7 = 0.00	CUT = 0.00	FILL =0.00	TOPSOIL PLACE =0.00

FINAL SURVEY — NOTE BOOK NO. — SURVEYED / PLOTTED / TEMPLATE / AREAS / AREAS CHECKED — BY — DATE

ORIGINAL SURVEY — NOTE BOOK NO. — SURVEYED / PLOTTED / TEMPLATE / AREAS / AREAS CHECKED — BY — DATE

FILE NAME = D876091-sht-xs-270.dgn	USER NAME = malopez	DESIGNED SJM	REVISED -
		DRAWN BAH	REVISED -
	PLOT SCALE = $SCALE$	CHECKED -	REVISED -
	PLOT DATE = 3/17/2011	DATE -	REVISED -

STATE OF ILLINOIS
DEPARTMENT OF TRANSPORTATION

CROSS SECTIONS
INTERSTATE I-270

SCALE: | SHEET NO. OF SHEETS | STA. 1169+00.00 TO STA. 1169+00.00

F.A.I. RTE.	SECTION	COUNTY	TOTAL SHEETS	SHEET NO.
270	60-1B-1	MADISON	712	552

CONTRACT NO. 76A91

ILLINOIS FED. AID PROJECT

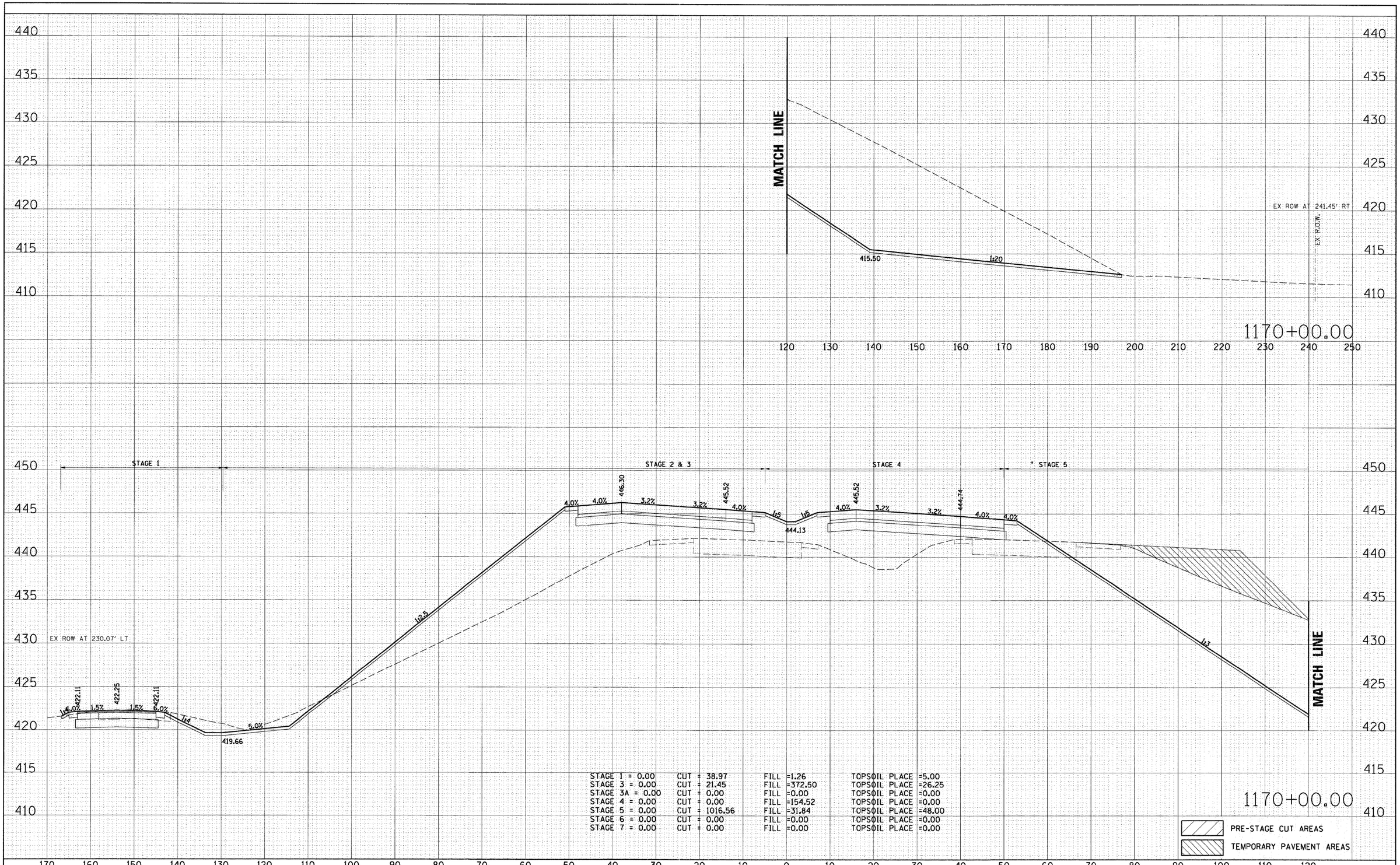

STAGE 1 = 0.00	CUT = 38.97	FILL =1.26	TOPSOIL PLACE =5.00
STAGE 3 = 0.00	CUT = 21.45	FILL =372.50	TOPSOIL PLACE =26.25
STAGE 3A = 0.00	CUT = 0.00	FILL =0.00	TOPSOIL PLACE =0.00
STAGE 4 = 0.00	CUT = 0.00	FILL =154.52	TOPSOIL PLACE =0.00
STAGE 5 = 0.00	CUT = 1016.56	FILL =31.84	TOPSOIL PLACE =48.00
STAGE 6 = 0.00	CUT = 0.00	FILL =0.00	TOPSOIL PLACE =0.00
STAGE 7 = 0.00	CUT = 0.00	FILL =0.00	TOPSOIL PLACE =0.00

FINAL SURVEY	BY	DATE
SURVEYED		
PLOTTED		
TEMPLATE		
AREAS		
AREAS CHECKED		
NOTE BOOK NO.		

ORIGINAL SURVEY	BY	DATE
SURVEYED		
PLOTTED		
TEMPLATE		
AREAS		
AREAS CHECKED		
NOTE BOOK NO.		

FILE NAME = D876D91-sht-xs-270.dgn	USER NAME = malopez	DESIGNED SJM	REVISED -
		DRAWN BAH	REVISED -
	PLOT SCALE = $SCALE$	CHECKED -	REVISED -
	PLOT DATE = 3/17/2011	DATE -	REVISED -

STATE OF ILLINOIS
DEPARTMENT OF TRANSPORTATION

CROSS SECTIONS
INTERSTATE I-270

SCALE: | SHEET NO. OF SHEETS | STA. 1170+00.00 TO STA. 1170+00.00

F.A.I. RTE.	SECTION	COUNTY	TOTAL SHEETS	SHEET NO.
270	60-1B-1	MADISON	712	553

CONTRACT NO. 76A91

ILLINOIS FED. AID PROJECT

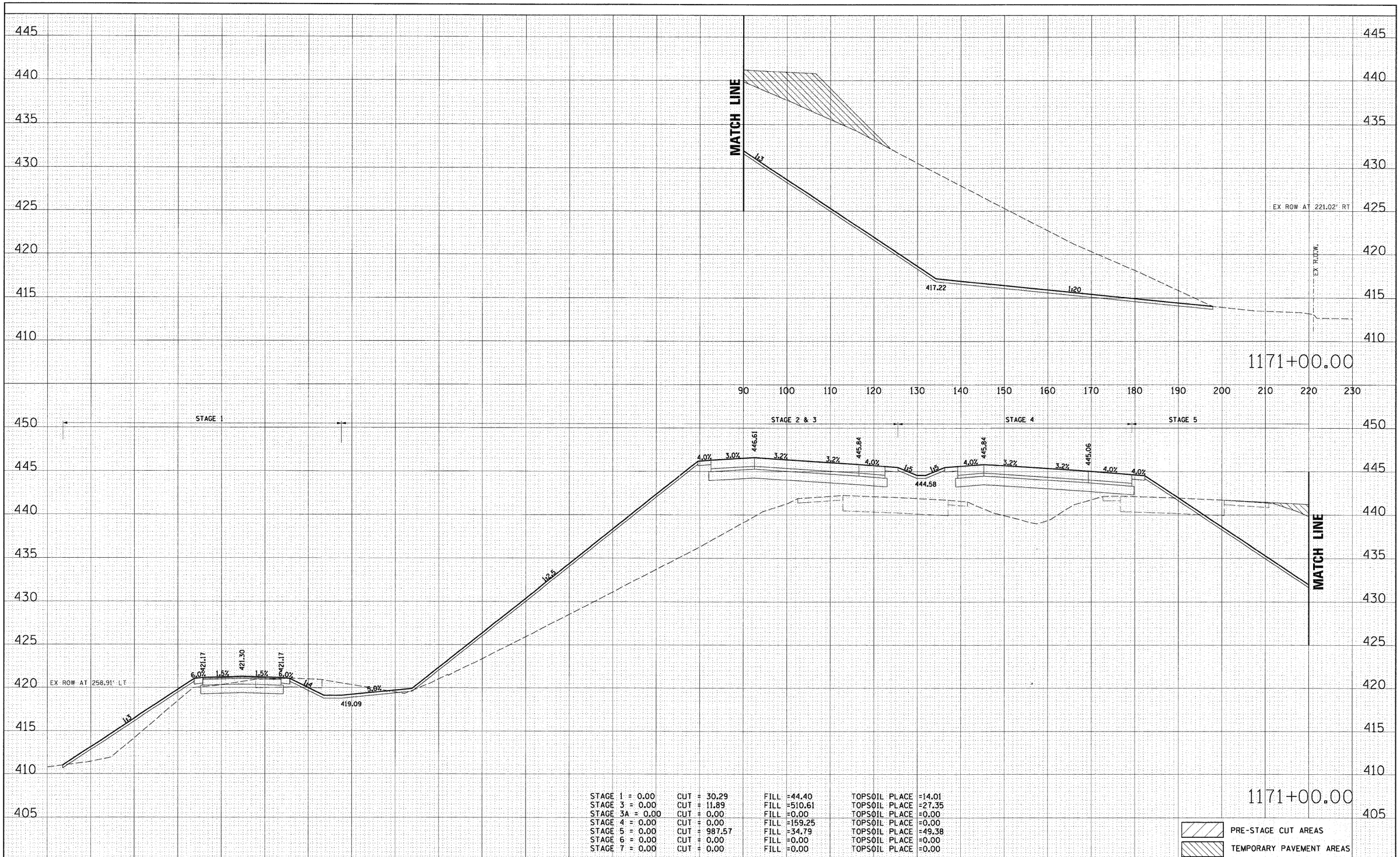

STAGE 1 = 0.00	CUT = 30.29	FILL =44.40	TOPSOIL PLACE =14.01
STAGE 3 = 0.00	CUT = 11.89	FILL =510.61	TOPSOIL PLACE =27.35
STAGE 3A = 0.00	CUT = 0.00	FILL =0.00	TOPSOIL PLACE =0.00
STAGE 4 = 0.00	CUT = 0.00	FILL =159.25	TOPSOIL PLACE =0.00
STAGE 5 = 0.00	CUT = 987.57	FILL =34.79	TOPSOIL PLACE =49.38
STAGE 6 = 0.00	CUT = 0.00	FILL =0.00	TOPSOIL PLACE =0.00
STAGE 7 = 0.00	CUT = 0.00	FILL =0.00	TOPSOIL PLACE =0.00

FINAL SURVEY	BY	DATE
SURVEYED		
PLOTTED		
TEMPLATE		
AREAS		
AREAS CHECKED		
NOTE BOOK NO.		

ORIGINAL SURVEY	BY	DATE
SURVEYED		
PLOTTED		
TEMPLATE		
AREAS		
AREAS CHECKED		
NOTE BOOK NO.		

FILE NAME = D876D91-sht-xs-270.dgn	USER NAME = malopez	DESIGNED SJM	REVISED -
		DRAWN BAH	REVISED -
	PLOT SCALE = $SCALE$	CHECKED -	REVISED -
	PLOT DATE = 3/17/2011	DATE -	REVISED -

STATE OF ILLINOIS
DEPARTMENT OF TRANSPORTATION

CROSS SECTIONS
INTERSTATE I-270

SCALE: | SHEET NO. OF SHEETS | STA. 1171+00.00 TO STA. 1171+00.00

F.A.I. RTE.	SECTION	COUNTY	TOTAL SHEETS	SHEET NO.
270	60-IB-1	MADISON	712	554

CONTRACT NO. 76A91

ILLINOIS FED. AID PROJECT

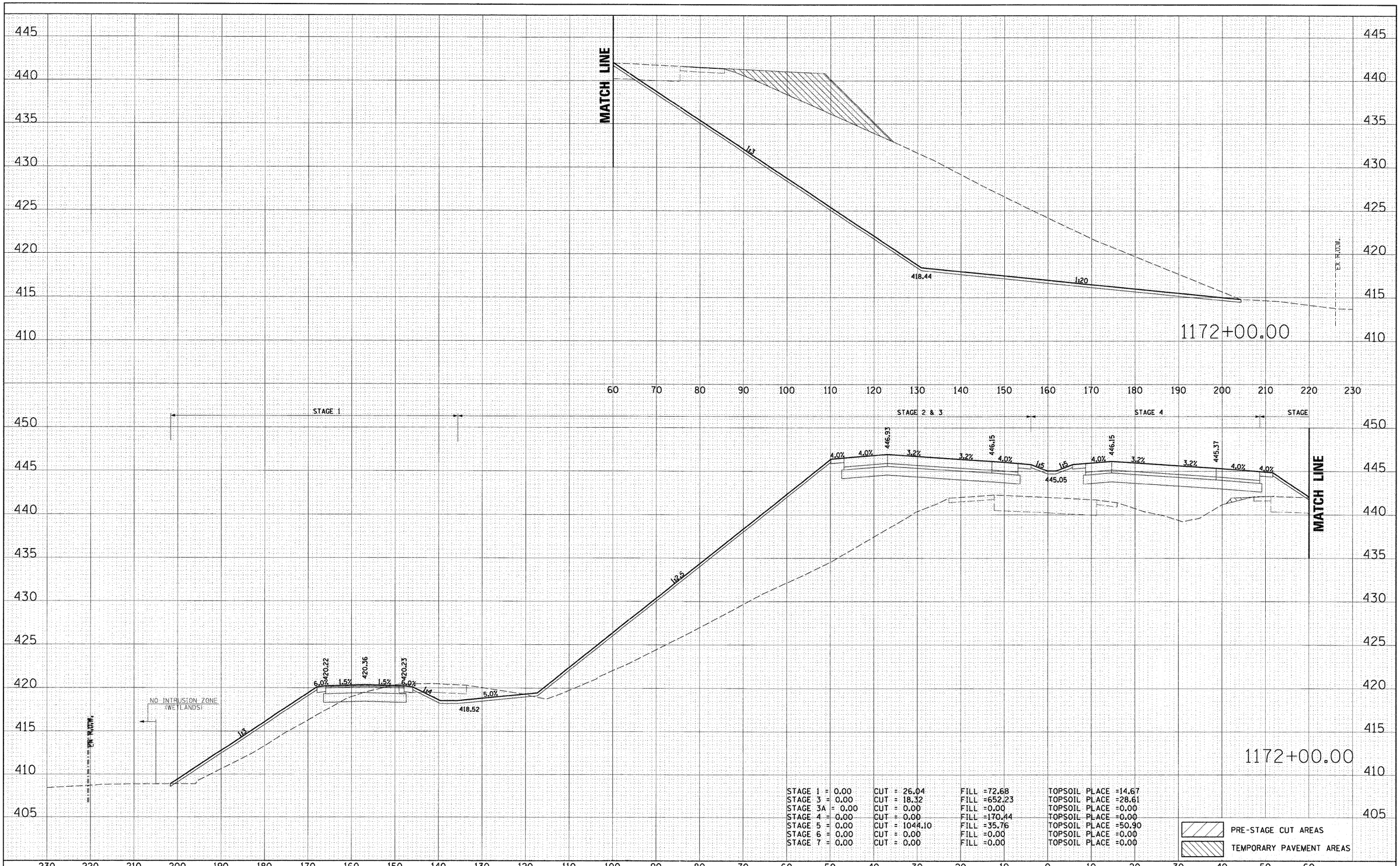

STAGE 1 = 0.00	CUT = 26.04	FILL =72.68	TOPSOIL PLACE =14.67
STAGE 3 = 0.00	CUT = 18.32	FILL =652.23	TOPSOIL PLACE =28.61
STAGE 3A = 0.00	CUT = 0.00	FILL =0.00	TOPSOIL PLACE =0.00
STAGE 4 = 0.00	CUT = 0.00	FILL =170.44	TOPSOIL PLACE =0.00
STAGE 5 = 0.00	CUT = 1044.10	FILL =35.76	TOPSOIL PLACE =50.90
STAGE 6 = 0.00	CUT = 0.00	FILL =0.00	TOPSOIL PLACE =0.00
STAGE 7 = 0.00	CUT = 0.00	FILL =0.00	TOPSOIL PLACE =0.00

PRE-STAGE CUT AREAS

TEMPORARY PAVEMENT AREAS

FINAL SURVEY — NOTE BOOK NO. — SURVEYED / PLOTTED / TEMPLATE / AREAS / AREAS CHECKED — BY — DATE

ORIGINAL SURVEY — NOTE BOOK NO. — SURVEYED / PLOTTED / TEMPLATE / AREAS / AREAS CHECKED — BY — DATE

FILE NAME = D876091-sht-xs-270.dgn	USER NAME = malopez	DESIGNED SJM	REVISED -
		DRAWN BAH	REVISED -
	PLOT SCALE = $SCALE$	CHECKED -	REVISED -
	PLOT DATE = 3/17/2011	DATE -	REVISED -

STATE OF ILLINOIS
DEPARTMENT OF TRANSPORTATION

CROSS SECTIONS
INTERSTATE I-270

SCALE: | SHEET NO. OF SHEETS | STA. 1172+00.00 TO STA. 1172+00.00

F.A.I. RTE.	SECTION	COUNTY	TOTAL SHEETS	SHEET NO.
270	60-1B-1	MADISON	712	555

CONTRACT NO. 76A91

ILLINOIS FED. AID PROJECT

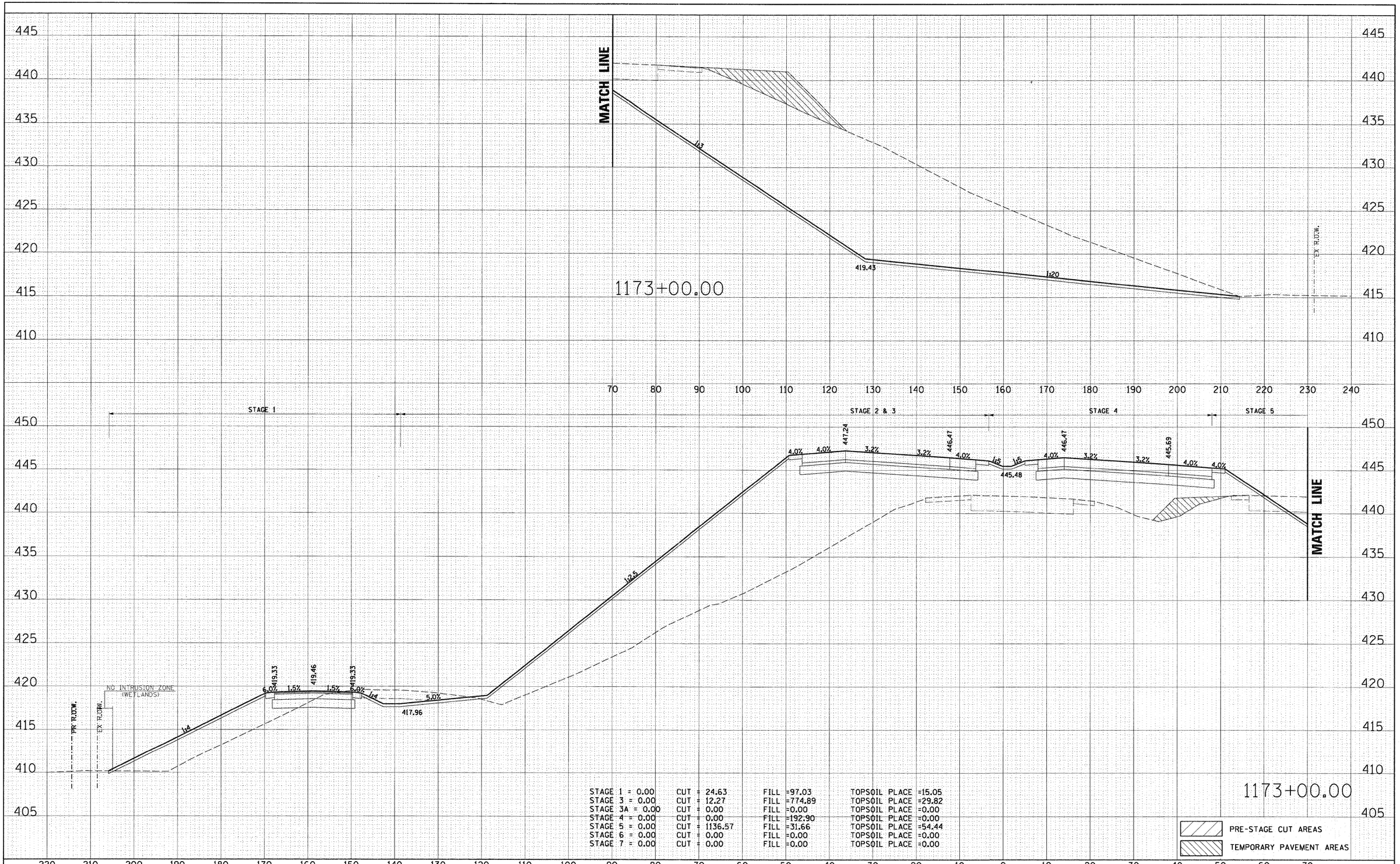

STAGE 1 = 0.00	CUT = 24.63	FILL =97.03	TOPSOIL PLACE =15.05
STAGE 3 = 0.00	CUT = 12.27	FILL =774.89	TOPSOIL PLACE =29.82
STAGE 3A = 0.00	CUT = 0.00	FILL =0.00	TOPSOIL PLACE =0.00
STAGE 4 = 0.00	CUT = 0.00	FILL =192.90	TOPSOIL PLACE =0.00
STAGE 5 = 0.00	CUT = 1136.57	FILL =31.66	TOPSOIL PLACE =54.44
STAGE 6 = 0.00	CUT = 0.00	FILL =0.00	TOPSOIL PLACE =0.00
STAGE 7 = 0.00	CUT = 0.00	FILL =0.00	TOPSOIL PLACE =0.00

FINAL SURVEY	BY	DATE
SURVEYED		
PLOTTED		
TEMPLATE		
AREAS		
AREAS CHECKED		
NOTE BOOK NO.		

ORIGINAL SURVEY	BY	DATE
SURVEYED		
PLOTTED		
TEMPLATE		
AREAS		
AREAS CHECKED		
NOTE BOOK NO.		

FILE NAME = D876D91-sht-xs-270.dgn	USER NAME = malopez	DESIGNED SJM	REVISED -
		DRAWN BAH	REVISED -
	PLOT SCALE = $SCALE$	CHECKED -	REVISED -
	PLOT DATE = 3/17/2011	DATE -	REVISED -

STATE OF ILLINOIS
DEPARTMENT OF TRANSPORTATION

CROSS SECTIONS
INTERSTATE I-270

SCALE: | SHEET NO. OF SHEETS | STA. 1173+00.00 TO STA. 1173+00.00

F.A.I. RTE.	SECTION	COUNTY	TOTAL SHEETS	SHEET NO.
270	60-IB-1	MADISON	712	556

CONTRACT NO. 76A91

ILLINOIS FED. AID PROJECT

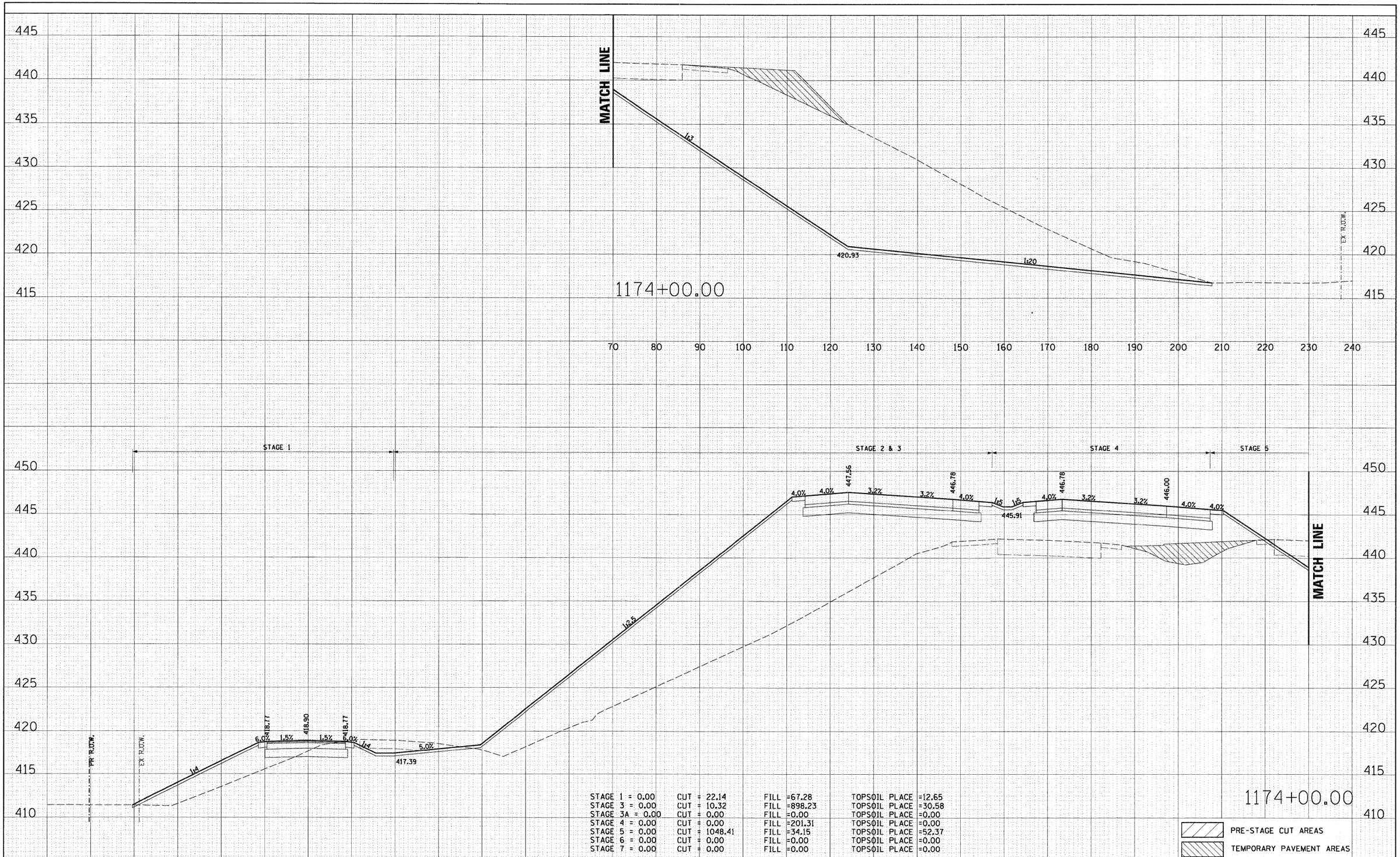

STAGE 1 = 0.00	CUT = 22.14	FILL =67.28	TOPSOIL PLACE =12.65
STAGE 3 = 0.00	CUT = 10.32	FILL =898.23	TOPSOIL PLACE =30.58
STAGE 3A = 0.00	CUT = 0.00	FILL =0.00	TOPSOIL PLACE =0.00
STAGE 4 = 0.00	CUT = 0.00	FILL =201.31	TOPSOIL PLACE =0.00
STAGE 5 = 0.00	CUT = 1048.41	FILL =34.15	TOPSOIL PLACE =52.37
STAGE 6 = 0.00	CUT = 0.00	FILL =0.00	TOPSOIL PLACE =0.00
STAGE 7 = 0.00	CUT = 0.00	FILL =0.00	TOPSOIL PLACE =0.00

FINAL SURVEY	BY	DATE
SURVEYED		
PLOTTED		
TEMPLATE		
AREAS		
AREAS CHECKED		
NOTE BOOK NO.		

ORIGINAL SURVEY	BY	DATE
SURVEYED		
PLOTTED		
TEMPLATE		
AREAS		
AREAS CHECKED		
NOTE BOOK NO.		

FILE NAME = D876D91-sht-xs-270.dgn	USER NAME = malopez	DESIGNED SJM	REVISED -
		DRAWN BAH	REVISED -
	PLOT SCALE = $SCALE$	CHECKED -	REVISED -
	PLOT DATE = 3/17/2011	DATE -	REVISED -

STATE OF ILLINOIS
DEPARTMENT OF TRANSPORTATION

CROSS SECTIONS
INTERSTATE I-270

SCALE: | SHEET NO. OF SHEETS | STA. 1174+00.00 TO STA. 1174+00.00

F.A.I. RTE.	SECTION	COUNTY	TOTAL SHEETS	SHEET NO.
270	60-1B-1	MADISON	712	557

CONTRACT NO. 76A91

ILLINOIS FED. AID PROJECT

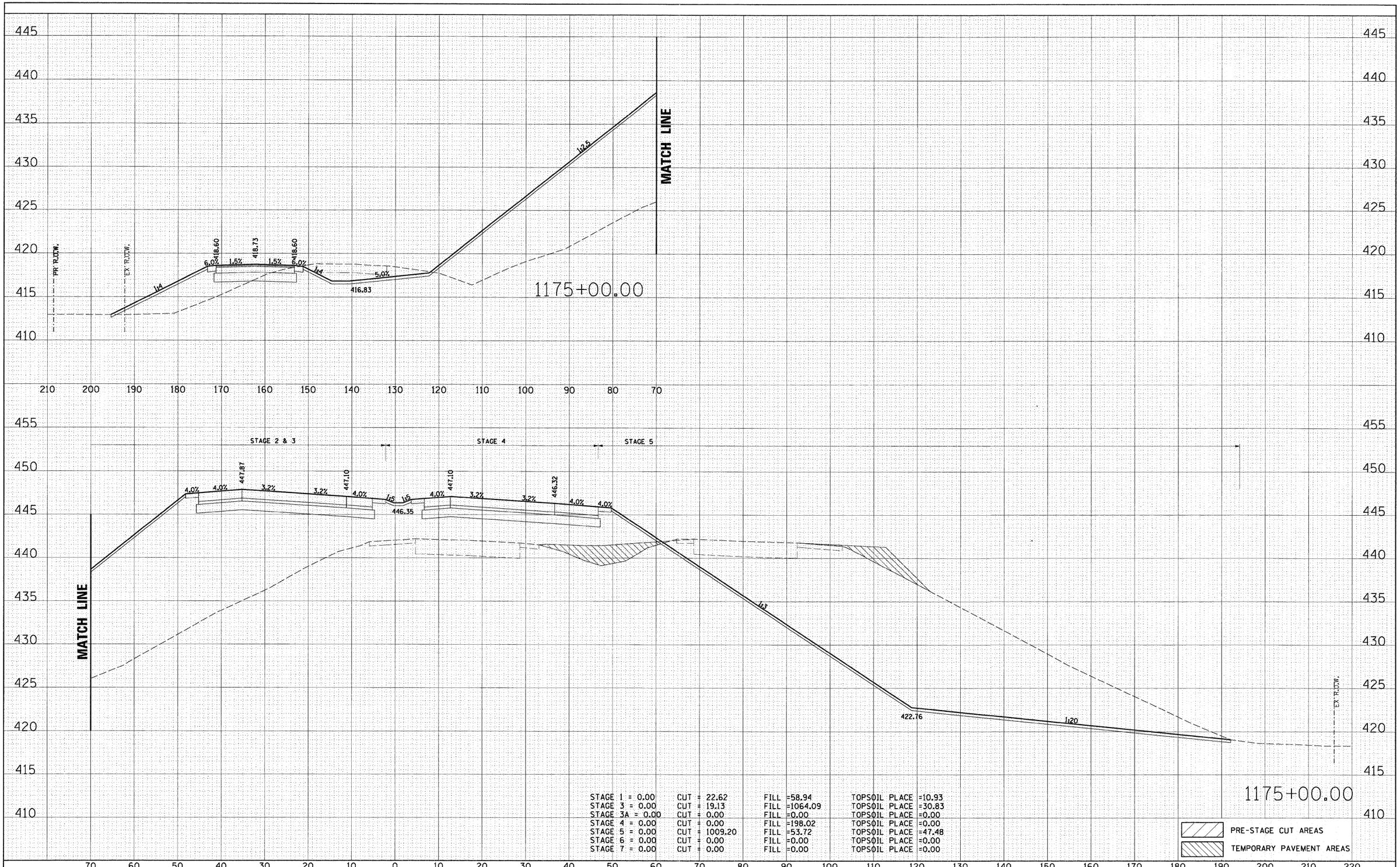

STAGE 1 = 0.00	CUT = 22.62	FILL =58.94	TOPSOIL PLACE =10.93
STAGE 3 = 0.00	CUT = 19.13	FILL =1064.09	TOPSOIL PLACE =30.83
STAGE 3A = 0.00	CUT = 0.00	FILL =0.00	TOPSOIL PLACE =0.00
STAGE 4 = 0.00	CUT = 0.00	FILL =198.02	TOPSOIL PLACE =0.00
STAGE 5 = 0.00	CUT = 1009.20	FILL =53.72	TOPSOIL PLACE =47.48
STAGE 6 = 0.00	CUT = 0.00	FILL =0.00	TOPSOIL PLACE =0.00
STAGE 7 = 0.00	CUT = 0.00	FILL =0.00	TOPSOIL PLACE =0.00

FINAL SURVEY — NOTE BOOK NO. — SURVEYED / PLOTTED / TEMPLATE / AREAS / AREAS CHECKED — BY — DATE

ORIGINAL SURVEY — NOTE BOOK NO. — SURVEYED / PLOTTED / TEMPLATE / AREAS / AREAS CHECKED — BY — DATE

FILE NAME = 0876091-sht-xs-270.dgn	USER NAME = malopez	DESIGNED SJM	REVISED -
		DRAWN BAH	REVISED -
	PLOT SCALE = $SCALE$	CHECKED -	REVISED -
	PLOT DATE = 3/17/2011	DATE -	REVISED -

STATE OF ILLINOIS
DEPARTMENT OF TRANSPORTATION

CROSS SECTIONS
INTERSTATE I-270

SCALE: | SHEET NO. OF SHEETS | STA. 1175+00.00 TO STA. 1175+00.00

F.A.I. RTE.	SECTION	COUNTY	TOTAL SHEETS	SHEET NO.
270	60-1B-1	MADISON	712	558

CONTRACT NO. 76A91

ILLINOIS FED. AID PROJECT

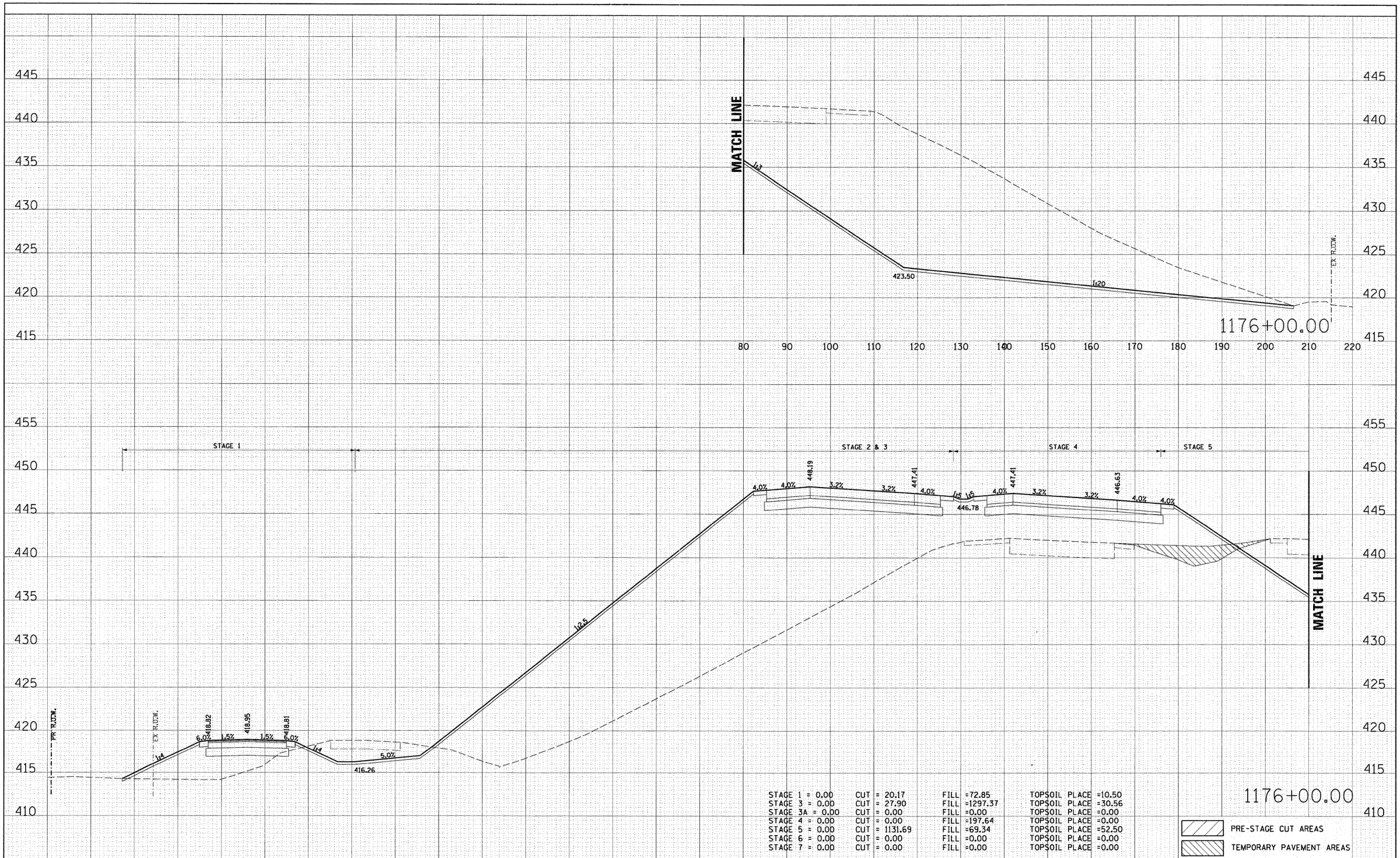

STAGE 1 = 0.00	CUT = 20.17	FILL =72.85	TOPSOIL PLACE =10.50
STAGE 3 = 0.00	CUT = 27.90	FILL =1297.37	TOPSOIL PLACE =30.56
STAGE 3A = 0.00	CUT = 0.00	FILL =0.00	TOPSOIL PLACE =0.00
STAGE 4 = 0.00	CUT = 0.00	FILL =197.64	TOPSOIL PLACE =0.00
STAGE 5 = 0.00	CUT = 1131.69	FILL =69.34	TOPSOIL PLACE =52.50
STAGE 6 = 0.00	CUT = 0.00	FILL =0.00	TOPSOIL PLACE =0.00
STAGE 7 = 0.00	CUT = 0.00	FILL =0.00	TOPSOIL PLACE =0.00

FINAL SURVEY	BY	DATE
SURVEYED		
PLOTTED		
TEMPLATE		
AREAS		
AREAS CHECKED		
NOTE BOOK NO.		

ORIGINAL SURVEY	BY	DATE
SURVEYED		
PLOTTED		
TEMPLATE		
AREAS		
AREAS CHECKED		
NOTE BOOK NO.		

FILE NAME = D876091-sht-xs-270.dgn	USER NAME = malopez	DESIGNED SJM	REVISED -
		DRAWN BAH	REVISED -
	PLOT SCALE = $SCALE$	CHECKED -	REVISED -
	PLOT DATE = 3/17/2011	DATE -	REVISED -

STATE OF ILLINOIS
DEPARTMENT OF TRANSPORTATION

CROSS SECTIONS
INTERSTATE I-270

SCALE: | SHEET NO. OF SHEETS | STA. 1176+00.00 TO STA. 1176+00.00

F.A.I. RTE.	SECTION	COUNTY	TOTAL SHEETS	SHEET NO.
270	60-IB-1	MADISON	712	559

CONTRACT NO. 76A91

ILLINOIS FED. AID PROJECT

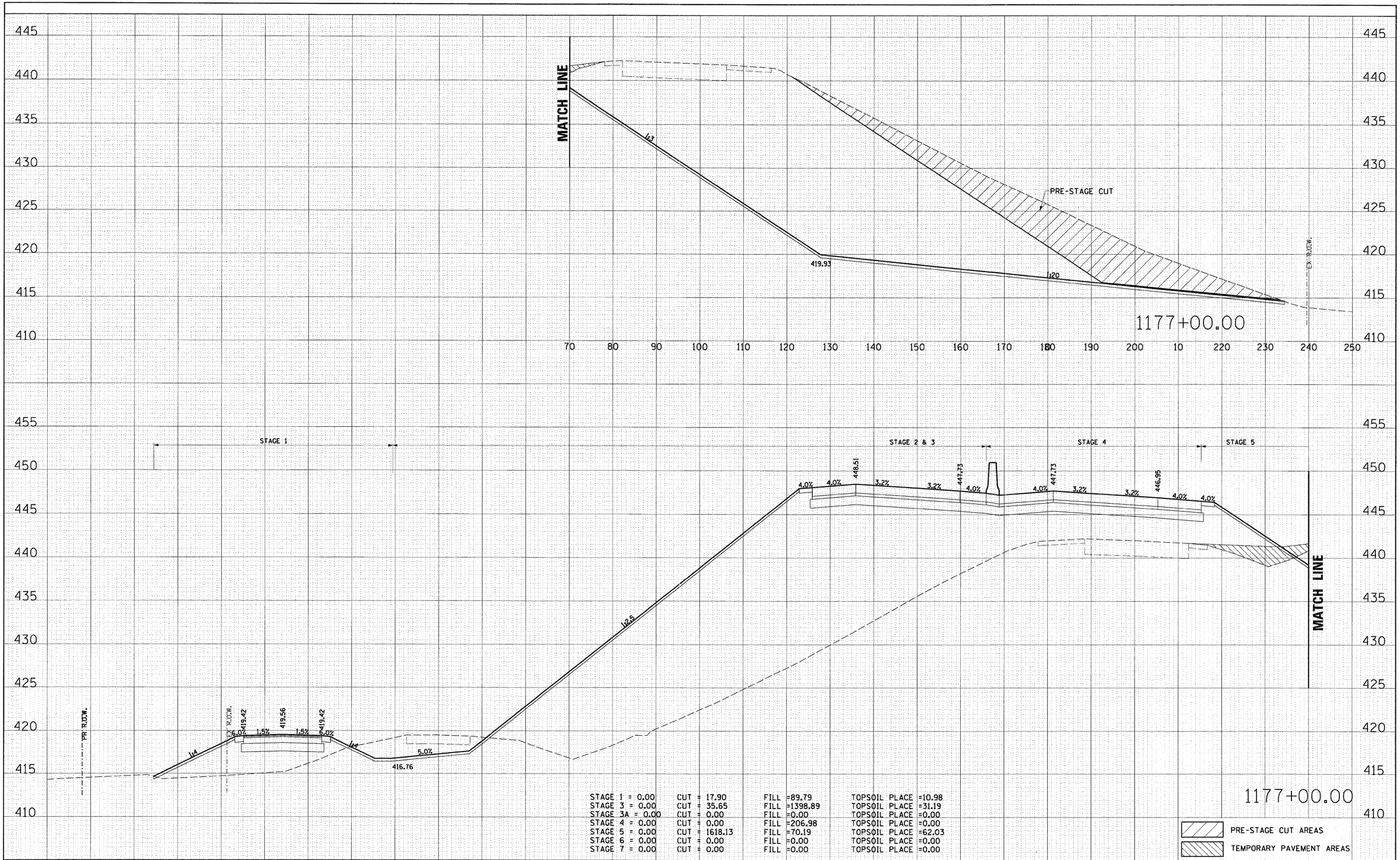

STAGE 1 = 0.00	CUT = 17.90	FILL =89.79	TOPSOIL PLACE =10.98
STAGE 3 = 0.00	CUT = 35.65	FILL =1398.89	TOPSOIL PLACE =31.19
STAGE 3A = 0.00	CUT = 0.00	FILL =0.00	TOPSOIL PLACE =0.00
STAGE 4 = 0.00	CUT = 0.00	FILL =206.98	TOPSOIL PLACE =0.00
STAGE 5 = 0.00	CUT = 1618.13	FILL =70.19	TOPSOIL PLACE =62.03
STAGE 6 = 0.00	CUT = 0.00	FILL =0.00	TOPSOIL PLACE =0.00
STAGE 7 = 0.00	CUT = 0.00	FILL =0.00	TOPSOIL PLACE =0.00

FILE NAME = D876D91-sht-xs-270.dgn	USER NAME = malopez	DESIGNED SJM	REVISED -
		DRAWN BAH	REVISED -
	PLOT SCALE = $SCALE$	CHECKED -	REVISED -
	PLOT DATE = 3/17/2011	DATE -	REVISED -

STATE OF ILLINOIS
DEPARTMENT OF TRANSPORTATION

CROSS SECTIONS
INTERSTATE I-270

SCALE: | SHEET NO. OF SHEETS | STA. 1177+00.00 TO STA. 1177+00.00

F.A.I. RTE.	SECTION	COUNTY	TOTAL SHEETS	SHEET NO.
270	60-1B-1	MADISON	712	560
		CONTRACT NO. 76A91		
		ILLINOIS FED. AID PROJECT		

FINAL SURVEY — NOTE BOOK NO. — SURVEYED / PLOTTED / TEMPLATE / AREAS / AREAS CHECKED — BY — DATE

ORIGINAL SURVEY — NOTE BOOK NO. — SURVEYED / PLOTTED / TEMPLATE / AREAS / AREAS CHECKED — BY — DATE

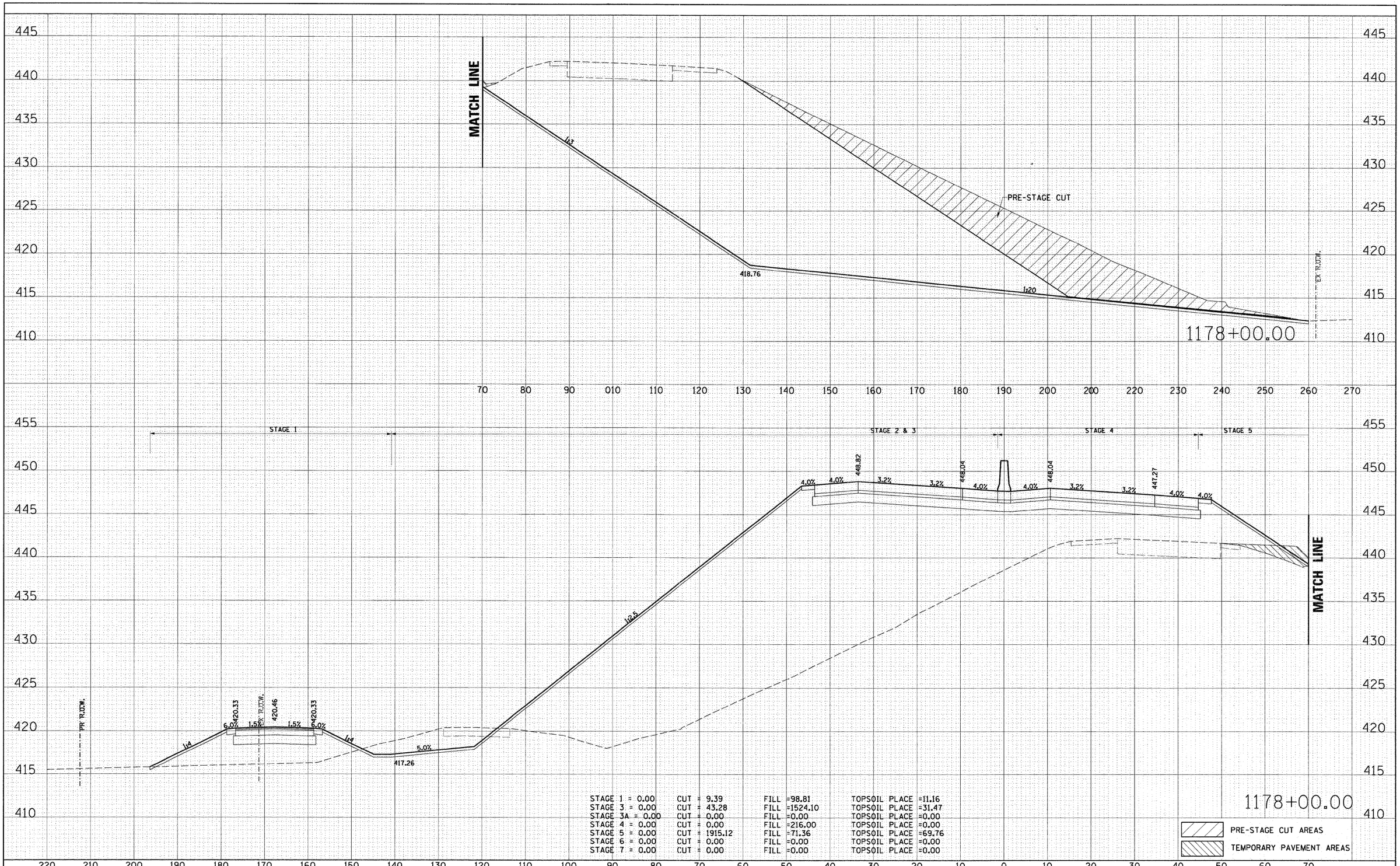

FINAL SURVEY	BY	DATE
SURVEYED		
PLOTTED		
TEMPLATE		
AREAS		
AREAS CHECKED		
NOTE BOOK NO.		

ORIGINAL SURVEY	BY	DATE
SURVEYED		
PLOTTED		
TEMPLATE		
AREAS		
AREAS CHECKED		
NOTE BOOK NO.		

FILE NAME = D876091-sht-xs-270.dgn	USER NAME = malopez	DESIGNED SJM	REVISED -
		DRAWN BAH	REVISED -
	PLOT SCALE = $SCALE$	CHECKED -	REVISED -
	PLOT DATE = 3/17/2011	DATE -	REVISED -

STATE OF ILLINOIS
DEPARTMENT OF TRANSPORTATION

CROSS SECTIONS
INTERSTATE I-270

SCALE: | SHEET NO. OF SHEETS | STA. 1178+00.00 TO STA. 1178+00.00

F.A.I. RTE.	SECTION	COUNTY	TOTAL SHEETS	SHEET NO.
270	60-1B-1	MADISON	712	561

CONTRACT NO. 76A91

ILLINOIS FED. AID PROJECT

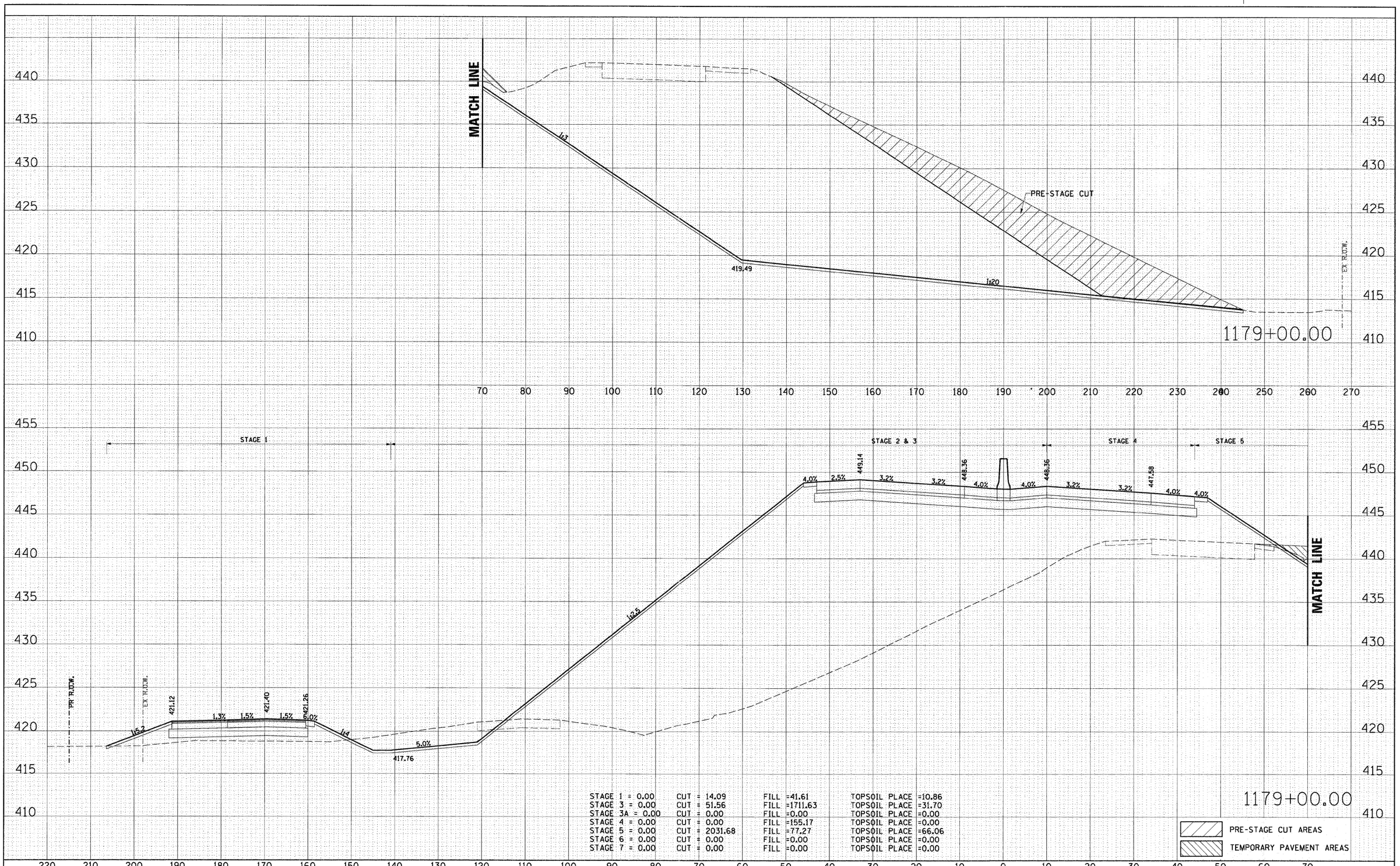

STAGE 1 = 0.00	CUT = 14.09	FILL =41.61	TOPSOIL PLACE =10.86
STAGE 3 = 0.00	CUT = 51.56	FILL =1711.63	TOPSOIL PLACE =31.70
STAGE 3A = 0.00	CUT = 0.00	FILL =0.00	TOPSOIL PLACE =0.00
STAGE 4 = 0.00	CUT = 0.00	FILL =155.17	TOPSOIL PLACE =0.00
STAGE 5 = 0.00	CUT = 2031.68	FILL =77.27	TOPSOIL PLACE =66.06
STAGE 6 = 0.00	CUT = 0.00	FILL =0.00	TOPSOIL PLACE =0.00
STAGE 7 = 0.00	CUT = 0.00	FILL =0.00	TOPSOIL PLACE =0.00

FILE NAME = D876D91-sht-xs-270.dgn	USER NAME = malopez	DESIGNED SJM	REVISED -
		DRAWN BAH	REVISED -
	PLOT SCALE = $SCALE$	CHECKED -	REVISED -
	PLOT DATE = 3/17/2011	DATE -	REVISED -

STATE OF ILLINOIS
DEPARTMENT OF TRANSPORTATION

CROSS SECTIONS
INTERSTATE I-270

SCALE: | SHEET NO. OF SHEETS | STA. 1179+00.00 TO STA. 1179+00.00

F.A.I. RTE.	SECTION	COUNTY	TOTAL SHEETS	SHEET NO.
270	60-1B-1	MADISON	712	562

CONTRACT NO. 76A91

ILLINOIS FED. AID PROJECT

FINAL SURVEY — NOTE BOOK NO. — SURVEYED — PLOTTED — TEMPLATE — AREAS — AREAS CHECKED — BY — DATE

ORIGINAL SURVEY — NOTE BOOK NO. — SURVEYED — PLOTTED — TEMPLATE — AREAS — AREAS CHECKED — BY — DATE

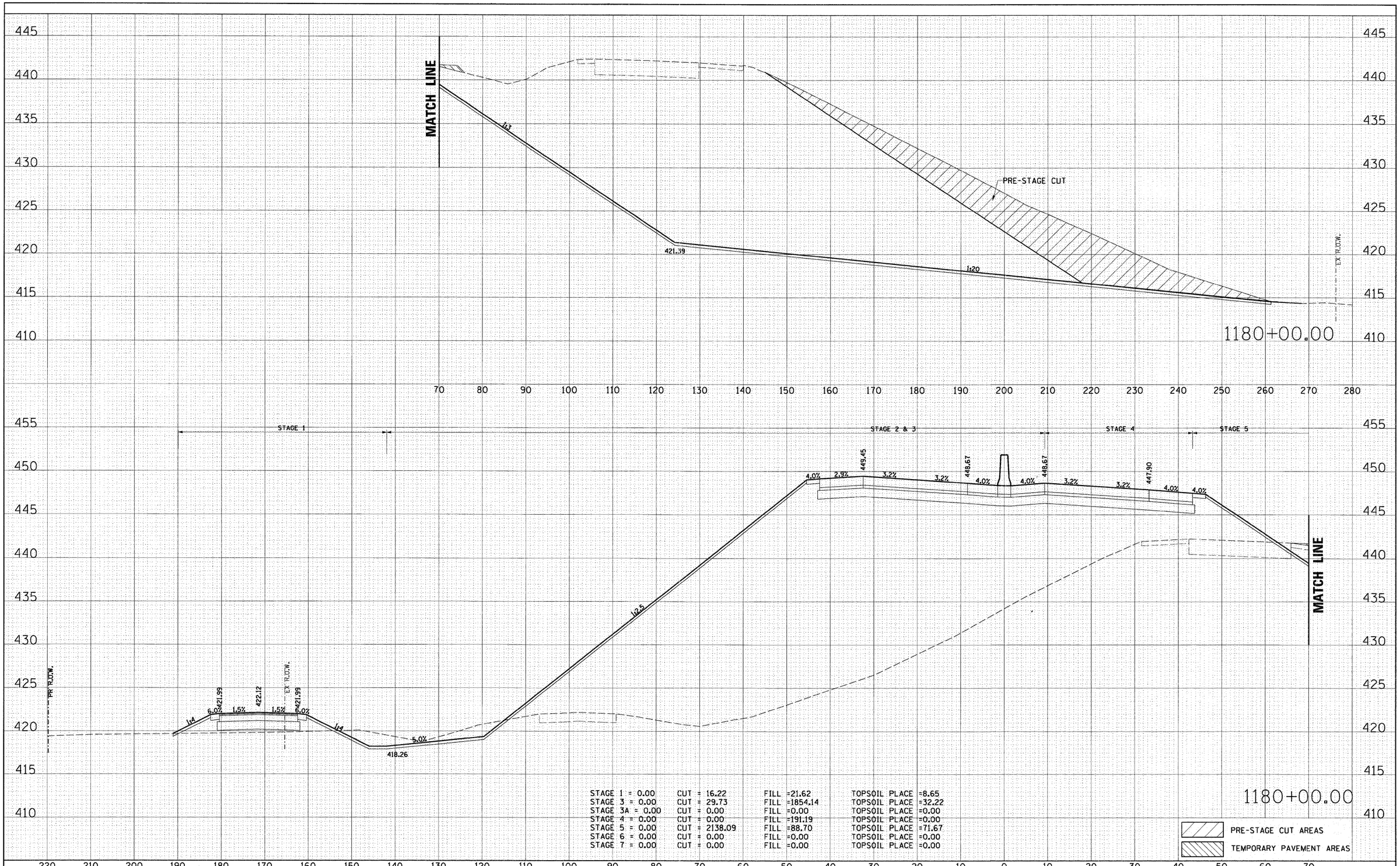

STAGE 1 = 0.00	CUT = 16.22	FILL =21.62	TOPSOIL PLACE =8.65	
STAGE 3 = 0.00	CUT = 29.73	FILL =1854.14	TOPSOIL PLACE =32.22	
STAGE 3A = 0.00	CUT = 0.00	FILL =0.00	TOPSOIL PLACE =0.00	
STAGE 4 = 0.00	CUT = 0.00	FILL =191.19	TOPSOIL PLACE =0.00	
STAGE 5 = 0.00	CUT = 2138.09	FILL =88.70	TOPSOIL PLACE =71.67	
STAGE 6 = 0.00	CUT = 0.00	FILL =0.00	TOPSOIL PLACE =0.00	
STAGE 7 = 0.00	CUT = 0.00	FILL =0.00	TOPSOIL PLACE =0.00	

FINAL SURVEY	BY	DATE
SURVEYED		
PLOTTED		
TEMPLATE		
AREAS		
AREAS CHECKED		
NOTE BOOK		
NO.		

ORIGINAL SURVEY	BY	DATE
SURVEYED		
PLOTTED		
TEMPLATE		
AREAS		
AREAS CHECKED		
NOTE BOOK		
NO.		

FILE NAME = D876D91-sht-xs-270.dgn	USER NAME = malopez	DESIGNED SJM	REVISED -
		DRAWN BAH	REVISED -
	PLOT SCALE = $SCALE$	CHECKED -	REVISED -
	PLOT DATE = 3/17/2011	DATE -	REVISED -

STATE OF ILLINOIS
DEPARTMENT OF TRANSPORTATION

CROSS SECTIONS
INTERSTATE I-270

SCALE: | SHEET NO. OF SHEETS | STA. 1180+00.00 TO STA. 1180+00.00

F.A.I. RTE.	SECTION	COUNTY	TOTAL SHEETS	SHEET NO.
270	60-1B-1	MADISON	712	563

CONTRACT NO. 76A91

ILLINOIS FED. AID PROJECT

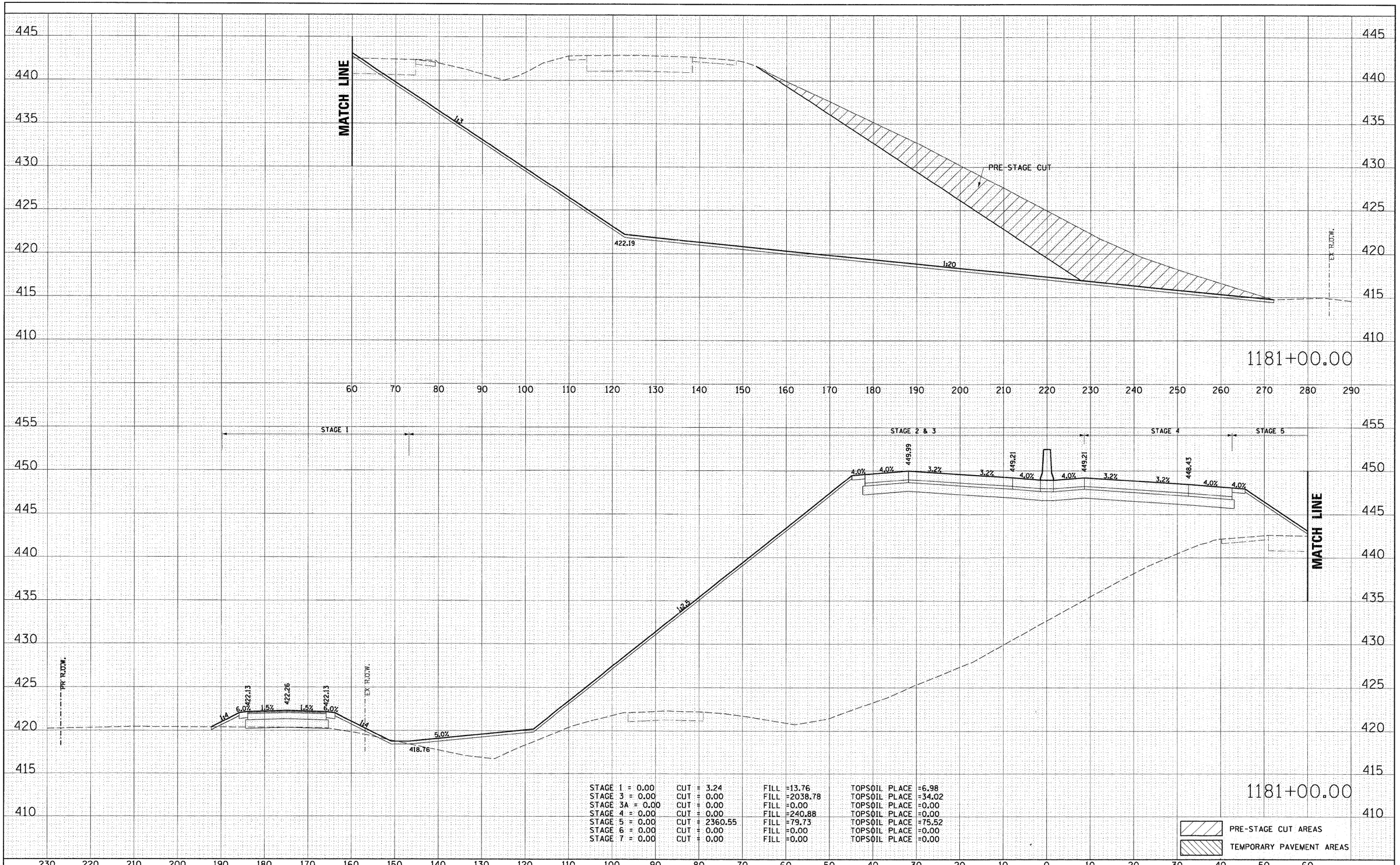

STAGE 1 = 0.00	CUT = 3.24	FILL =13.76	TOPSOIL PLACE =6.98
STAGE 3 = 0.00	CUT = 0.00	FILL =2038.78	TOPSOIL PLACE =34.02
STAGE 3A = 0.00	CUT = 0.00	FILL =0.00	TOPSOIL PLACE =0.00
STAGE 4 = 0.00	CUT = 0.00	FILL =240.88	TOPSOIL PLACE =0.00
STAGE 5 = 0.00	CUT = 2360.55	FILL =79.73	TOPSOIL PLACE =75.52
STAGE 6 = 0.00	CUT = 0.00	FILL =0.00	TOPSOIL PLACE =0.00
STAGE 7 = 0.00	CUT = 0.00	FILL =0.00	TOPSOIL PLACE =0.00

FINAL SURVEY	BY	DATE
SURVEYED		
PLOTTED		
TEMPLATE		
AREAS		
AREAS CHECKED		
NOTE BOOK NO.		

ORIGINAL SURVEY	BY	DATE
SURVEYED		
PLOTTED		
TEMPLATE		
AREAS		
AREAS CHECKED		
NOTE BOOK NO.		

FILE NAME = D876D91-sht-xs-270.dgn	USER NAME = malopez	DESIGNED SJM	REVISED -
		DRAWN BAH	REVISED -
	PLOT SCALE = $SCALE$	CHECKED -	REVISED -
	PLOT DATE = 3/17/2011	DATE -	REVISED -

STATE OF ILLINOIS
DEPARTMENT OF TRANSPORTATION

CROSS SECTIONS
INTERSTATE I-270

SCALE: | SHEET NO. OF SHEETS | STA. 1181+00.00 TO STA. 1181+00.00

F.A.I. RTE.	SECTION	COUNTY	TOTAL SHEETS	SHEET NO.
270	60-1B-1	MADISON	712	564

CONTRACT NO. 76A91

ILLINOIS FED. AID PROJECT

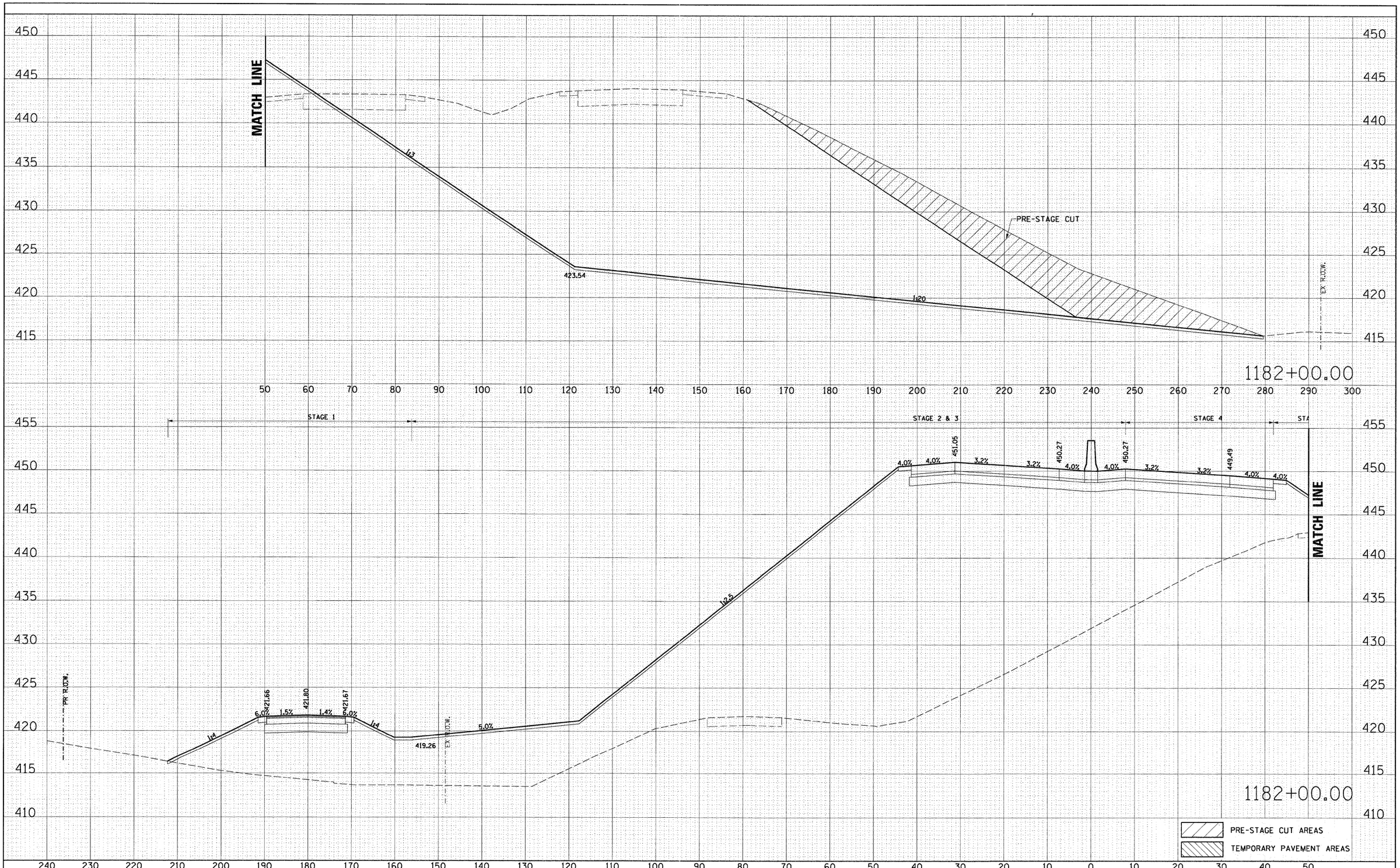

FINAL SURVEY	BY	DATE
SURVEYED		
PLOTTED		
TEMPLATE		
AREAS		
AREAS CHECKED		
NOTE BOOK NO.		

ORIGINAL SURVEY	BY	DATE
SURVEYED		
PLOTTED		
TEMPLATE		
AREAS		
AREAS CHECKED		
NOTE BOOK NO.		

FILE NAME = 0876091-sht-xs-270.dgn	USER NAME = malopez	DESIGNED SJM	REVISED -
		DRAWN BAH	REVISED -
	PLOT SCALE = $SCALE$	CHECKED -	REVISED -
	PLOT DATE = 3/17/2011	DATE -	REVISED -

STATE OF ILLINOIS
DEPARTMENT OF TRANSPORTATION

CROSS SECTIONS
INTERSTATE I-270

SCALE: | SHEET NO. OF SHEETS | STA. 1182+00.00 TO STA. 1182+00.00

F.A.I. RTE.	SECTION	COUNTY	TOTAL SHEETS	SHEET NO.
270	60-1B-1	MADISON	712	565
		CONTRACT NO. 76A91		
		ILLINOIS FED. AID PROJECT		

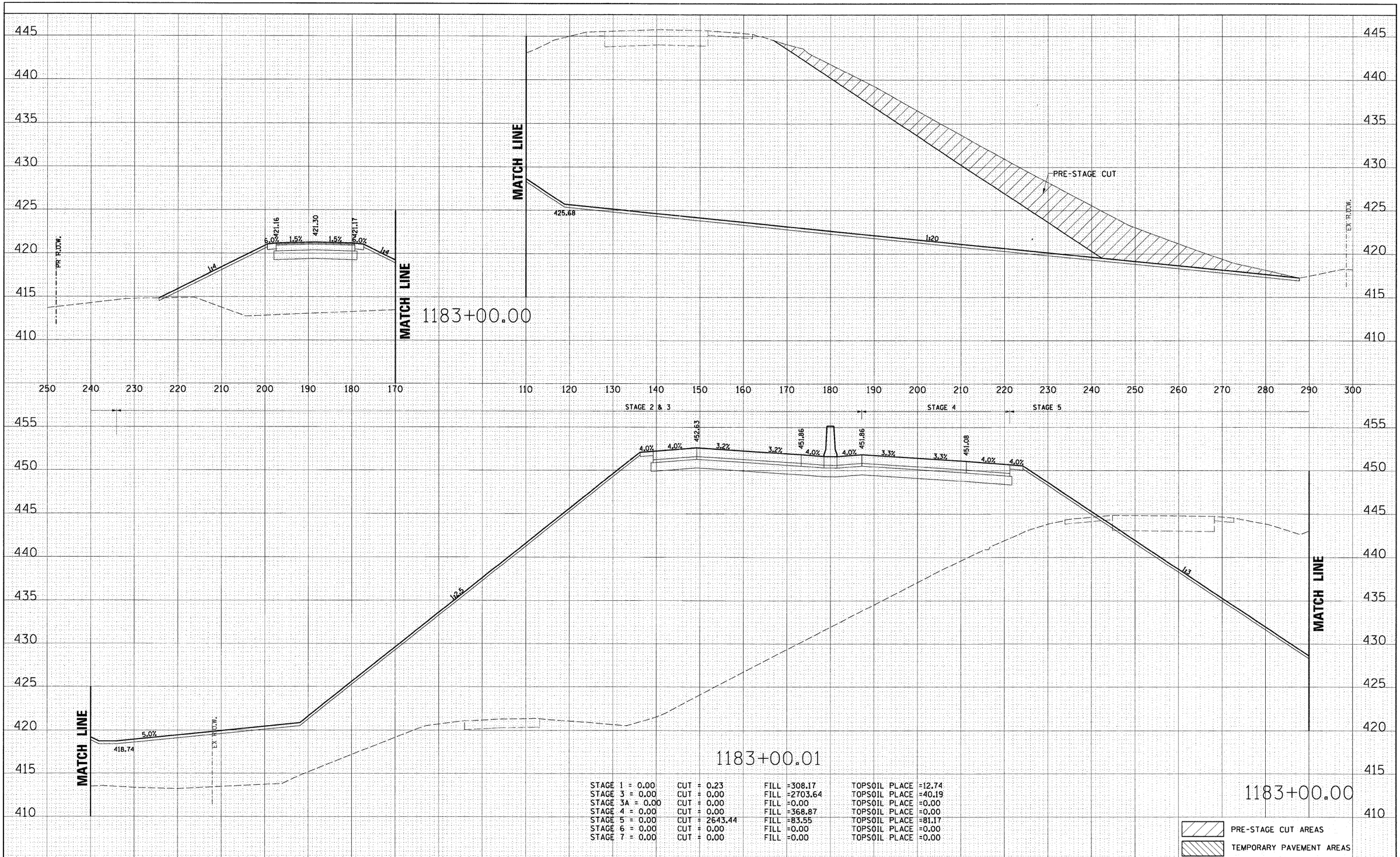

	CUT	FILL	TOPSOIL PLACE
STAGE 1 = 0.00	CUT = 0.23	FILL =308.17	TOPSOIL PLACE =12.74
STAGE 3 = 0.00	CUT = 0.00	FILL =2703.64	TOPSOIL PLACE =40.19
STAGE 3A = 0.00	CUT = 0.00	FILL =0.00	TOPSOIL PLACE =0.00
STAGE 4 = 0.00	CUT = 0.00	FILL =368.87	TOPSOIL PLACE =0.00
STAGE 5 = 0.00	CUT = 2643.44	FILL =83.55	TOPSOIL PLACE =81.17
STAGE 6 = 0.00	CUT = 0.00	FILL =0.00	TOPSOIL PLACE =0.00
STAGE 7 = 0.00	CUT = 0.00	FILL =0.00	TOPSOIL PLACE =0.00

FINAL SURVEY	BY	DATE
SURVEYED		
PLOTTED		
TEMPLATE		
AREAS		
AREAS CHECKED		
NOTE BOOK NO.		

ORIGINAL SURVEY	BY	DATE
SURVEYED		
PLOTTED		
TEMPLATE		
AREAS		
AREAS CHECKED		
NOTE BOOK NO.		

FILE NAME = D876091-sht-xs-270.dgn	USER NAME = malopez	DESIGNED SJM	REVISED -
		DRAWN BAH	REVISED -
	PLOT SCALE = $SCALE$	CHECKED -	REVISED -
	PLOT DATE = 3/17/2011	DATE -	REVISED -

STATE OF ILLINOIS
DEPARTMENT OF TRANSPORTATION

CROSS SECTIONS
INTERSTATE I-270

SCALE: | SHEET NO. OF SHEETS | STA. 1183+00.00 TO STA. 1183+00.00

F.A.I. RTE.	SECTION	COUNTY	TOTAL SHEETS	SHEET NO.
270	60-1B-1	MADISON	712	566
		CONTRACT NO. 76A91		
		ILLINOIS FED. AID PROJECT		

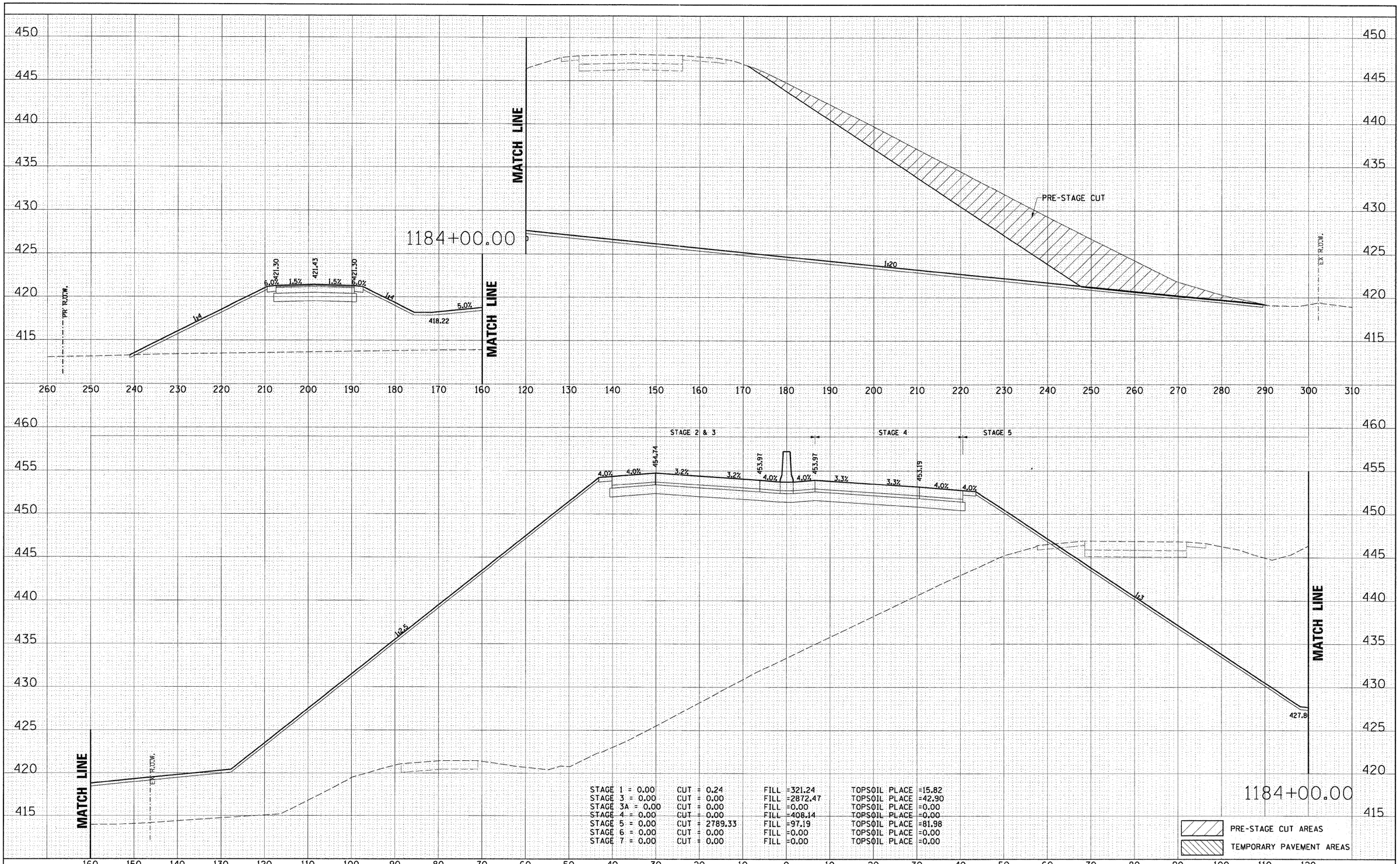

FINAL SURVEY	BY	DATE
SURVEYED		
PLOTTED		
TEMPLATE		
AREAS		
AREAS CHECKED		
NOTE BOOK NO.		

ORIGINAL SURVEY	BY	DATE
SURVEYED		
PLOTTED		
TEMPLATE		
AREAS		
AREAS CHECKED		
NOTE BOOK NO.		

FILE NAME = D876091-sht-xs-270.dgn	USER NAME = malopez	DESIGNED SJM	REVISED -
		DRAWN BAH	REVISED -
	PLOT SCALE = $SCALE$	CHECKED -	REVISED -
	PLOT DATE = 3/17/2011	DATE -	REVISED -

STATE OF ILLINOIS
DEPARTMENT OF TRANSPORTATION

CROSS SECTIONS
INTERSTATE I-270

SCALE: | SHEET NO. OF SHEETS | STA. 1184+00.00 TO STA. 1184+00.00

F.A.I. RTE.	SECTION	COUNTY	TOTAL SHEETS	SHEET NO.
270	60-1B-1	MADISON	712	567
		CONTRACT NO. 76A91		

ILLINOIS FED. AID PROJECT

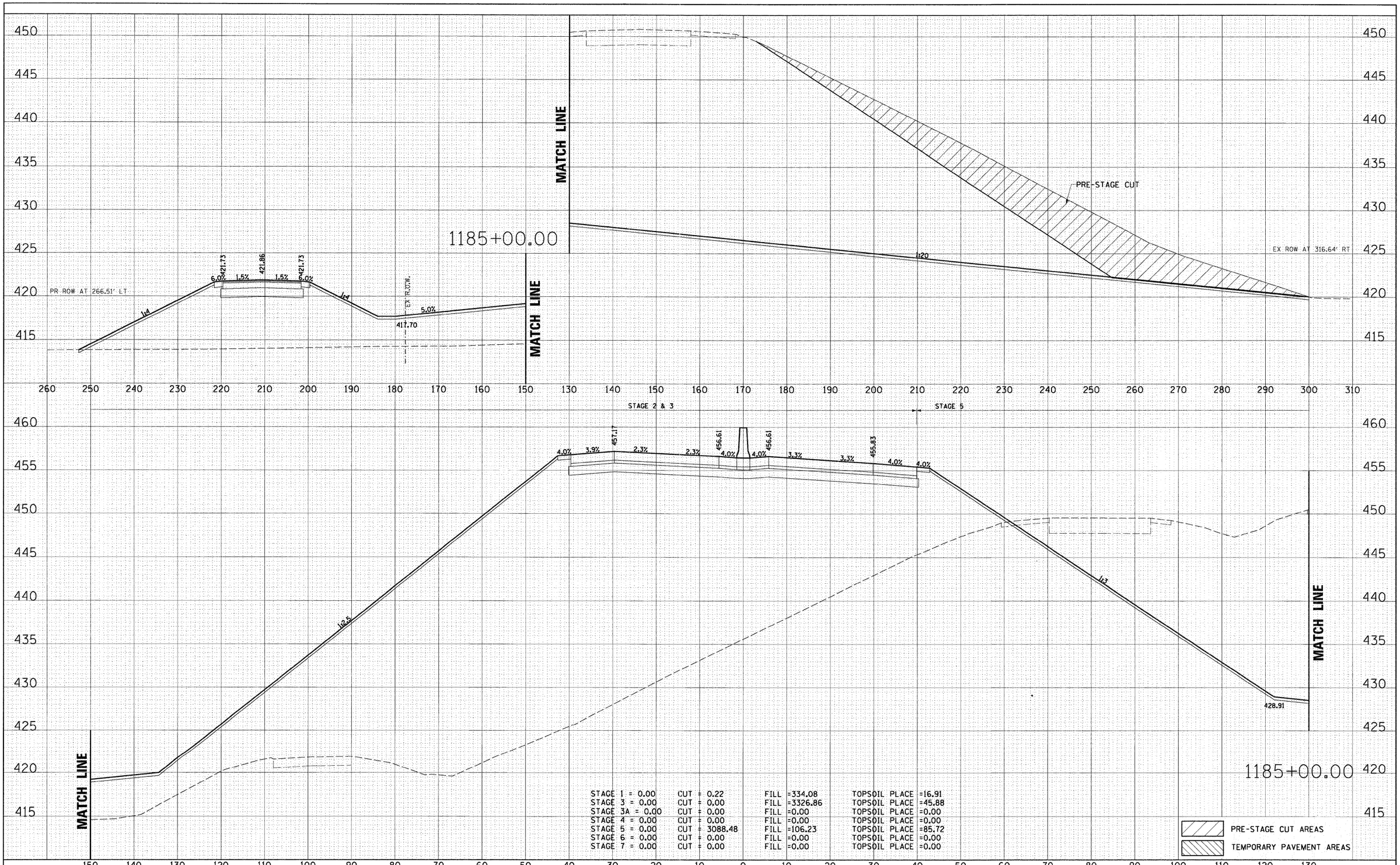

FINAL SURVEY	BY	DATE
SURVEYED		
PLOTTED		
TEMPLATE		
AREAS		
AREAS CHECKED		
NOTE BOOK NO.		

ORIGINAL SURVEY	BY	DATE
SURVEYED		
PLOTTED		
TEMPLATE		
AREAS		
AREAS CHECKED		
NOTE BOOK NO.		

FILE NAME = D876091-sht-xs-270.dgn	USER NAME = malopez	DESIGNED SJM	REVISED -
		DRAWN BAH	REVISED -
	PLOT SCALE = $SCALE$	CHECKED -	REVISED -
	PLOT DATE = 3/17/2011	DATE -	REVISED -

STATE OF ILLINOIS
DEPARTMENT OF TRANSPORTATION

CROSS SECTIONS
INTERSTATE I-270

SCALE: | SHEET NO. OF SHEETS | STA. 1185+00.00 TO STA. 1185+00.00

F.A.I. RTE.	SECTION	COUNTY	TOTAL SHEETS	SHEET NO.
270	60-1B-1	MADISON	712	568
		CONTRACT NO. 76A91		
	ILLINOIS FED. AID PROJECT			

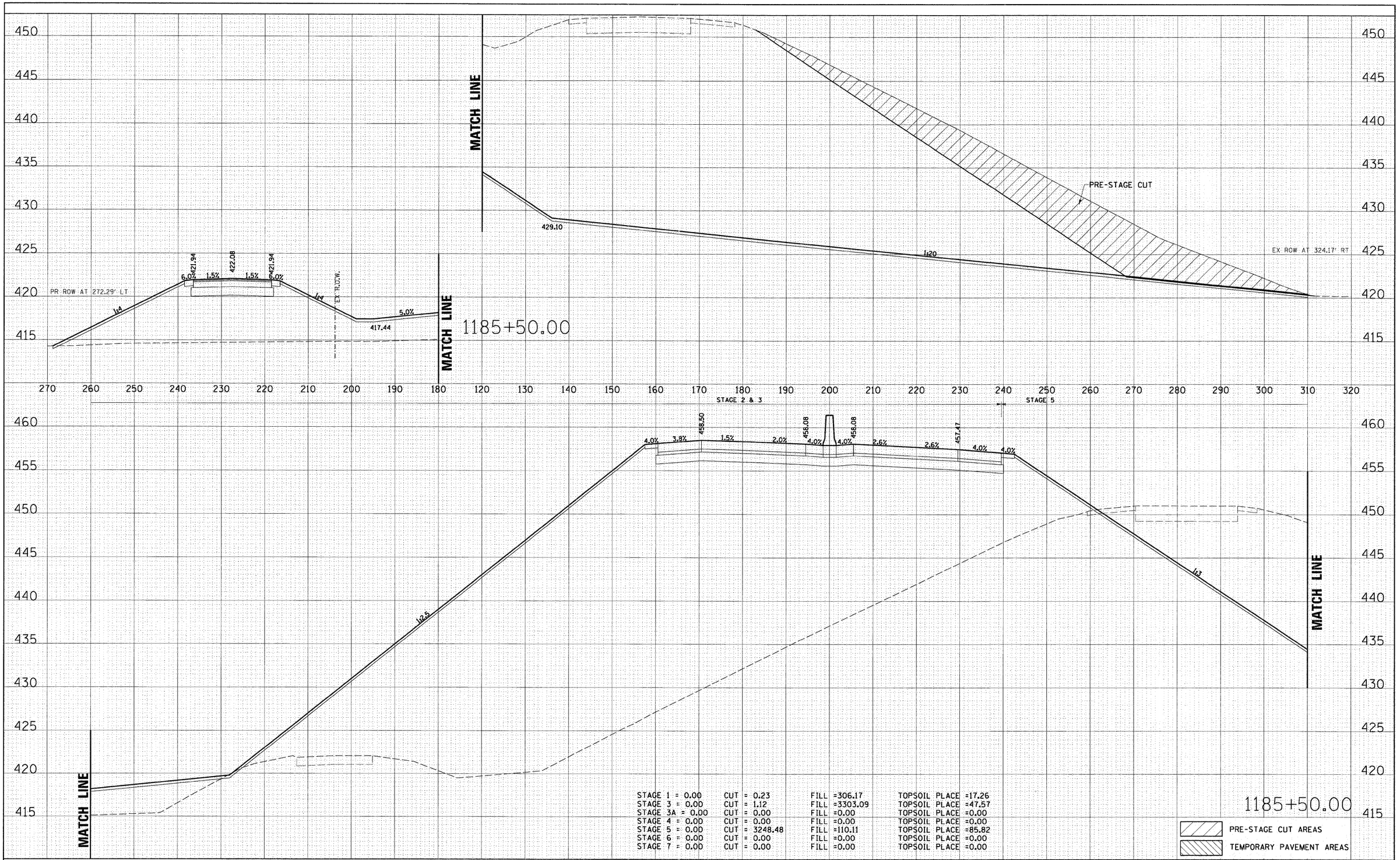

STAGE 1 = 0.00	CUT = 0.23	FILL =306.17	TOPSOIL PLACE =17.26
STAGE 3 = 0.00	CUT = 1.12	FILL =3303.09	TOPSOIL PLACE =47.57
STAGE 3A = 0.00	CUT = 0.00	FILL =0.00	TOPSOIL PLACE =0.00
STAGE 4 = 0.00	CUT = 0.00	FILL =0.00	TOPSOIL PLACE =0.00
STAGE 5 = 0.00	CUT = 3248.48	FILL =110.11	TOPSOIL PLACE =85.82
STAGE 6 = 0.00	CUT = 0.00	FILL =0.00	TOPSOIL PLACE =0.00
STAGE 7 = 0.00	CUT = 0.00	FILL =0.00	TOPSOIL PLACE =0.00

FINAL SURVEY	BY	DATE
SURVEYED		
PLOTTED		
TEMPLATE		
AREAS		
AREAS CHECKED		
NOTE BOOK NO.		

ORIGINAL SURVEY	BY	DATE
SURVEYED		
PLOTTED		
TEMPLATE		
AREAS		
AREAS CHECKED		
NOTE BOOK NO.		

FILE NAME = 0876D91-sht-xs-270.dgn	USER NAME = melopez	DESIGNED SJM	REVISED -
		DRAWN BAH	REVISED -
	PLOT SCALE = $SCALE$	CHECKED -	REVISED -
	PLOT DATE = 3/17/2011	DATE -	REVISED -

STATE OF ILLINOIS
DEPARTMENT OF TRANSPORTATION

CROSS SECTIONS
INTERSTATE I-270

SCALE: | SHEET NO. OF SHEETS | STA. 1185+50.00 TO STA. 1185+50.00

F.A.I. RTE.	SECTION	COUNTY	TOTAL SHEETS	SHEET NO.
270	60-1B-1	MADISON	712	569
		CONTRACT NO. 76A91		
		ILLINOIS FED. AID PROJECT		

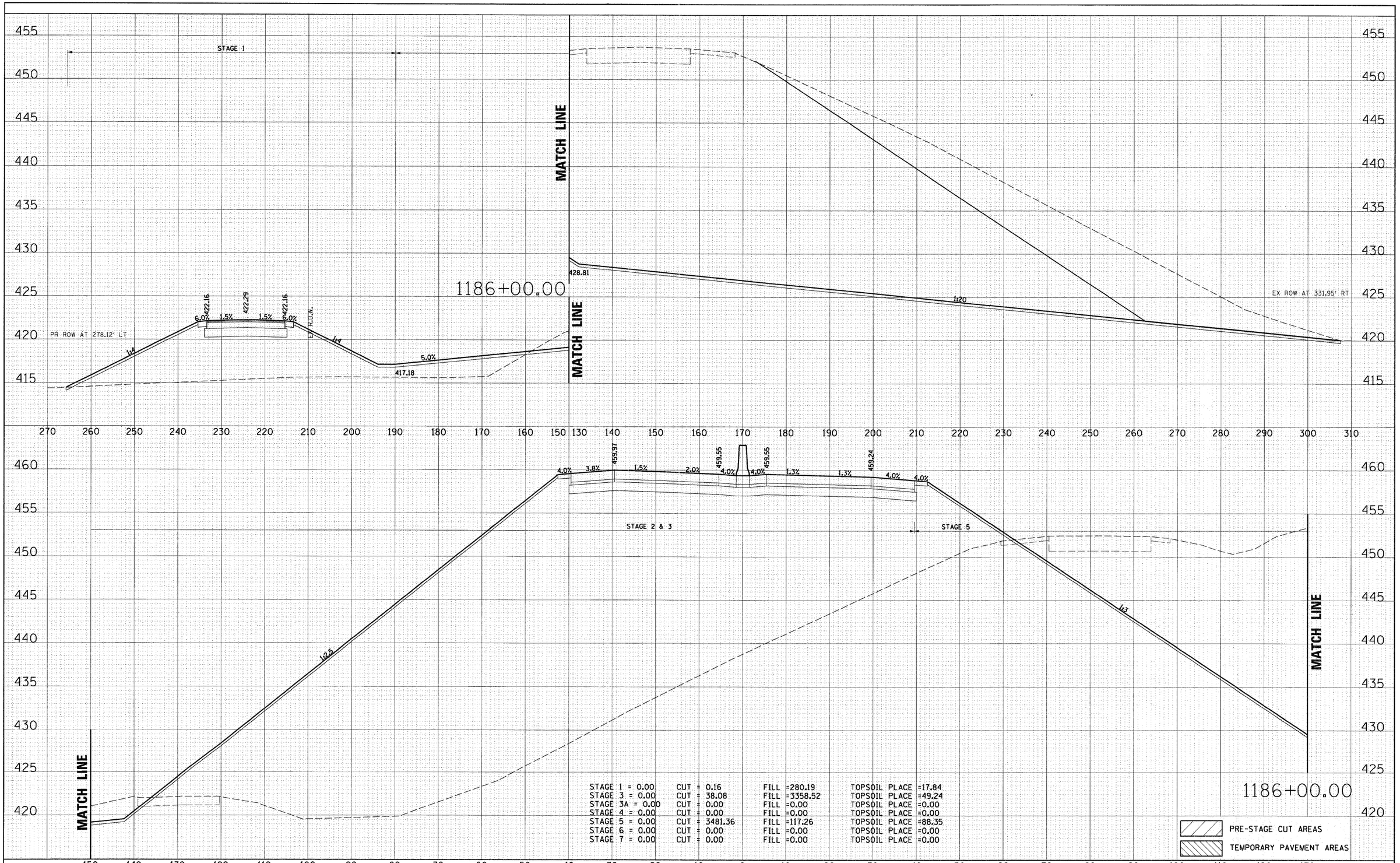

STAGE 1 = 0.00	CUT = 0.16	FILL =280.19	TOPSOIL PLACE =17.84
STAGE 3 = 0.00	CUT = 38.08	FILL =3358.52	TOPSOIL PLACE =49.24
STAGE 3A = 0.00	CUT = 0.00	FILL =0.00	TOPSOIL PLACE =0.00
STAGE 4 = 0.00	CUT = 0.00	FILL =0.00	TOPSOIL PLACE =0.00
STAGE 5 = 0.00	CUT = 3481.36	FILL =117.26	TOPSOIL PLACE =88.35
STAGE 6 = 0.00	CUT = 0.00	FILL =0.00	TOPSOIL PLACE =0.00
STAGE 7 = 0.00	CUT = 0.00	FILL =0.00	TOPSOIL PLACE =0.00

FINAL SURVEY — NOTE BOOK NO. — SURVEYED / PLOTTED / TEMPLATE / AREAS / AREAS CHECKED — BY — DATE

ORIGINAL SURVEY — NOTE BOOK NO. — SURVEYED / PLOTTED / TEMPLATE / AREAS / AREAS CHECKED — BY — DATE

FILE NAME = D876D91-sht-xs-270.dgn	USER NAME = malopez	DESIGNED SJM	REVISED -
		DRAWN BAH	REVISED -
	PLOT SCALE = $SCALE$	CHECKED -	REVISED -
	PLOT DATE = 3/17/2011	DATE -	REVISED -

STATE OF ILLINOIS
DEPARTMENT OF TRANSPORTATION

CROSS SECTIONS
INTERSTATE I-270

SCALE: | SHEET NO. OF SHEETS | STA. 1186+00.00 TO STA. 1186+00.00

F.A.I. RTE.	SECTION	COUNTY	TOTAL SHEETS	SHEET NO.
270	60-1B-1	MADISON	712	570

CONTRACT NO. 76A91

ILLINOIS FED. AID PROJECT

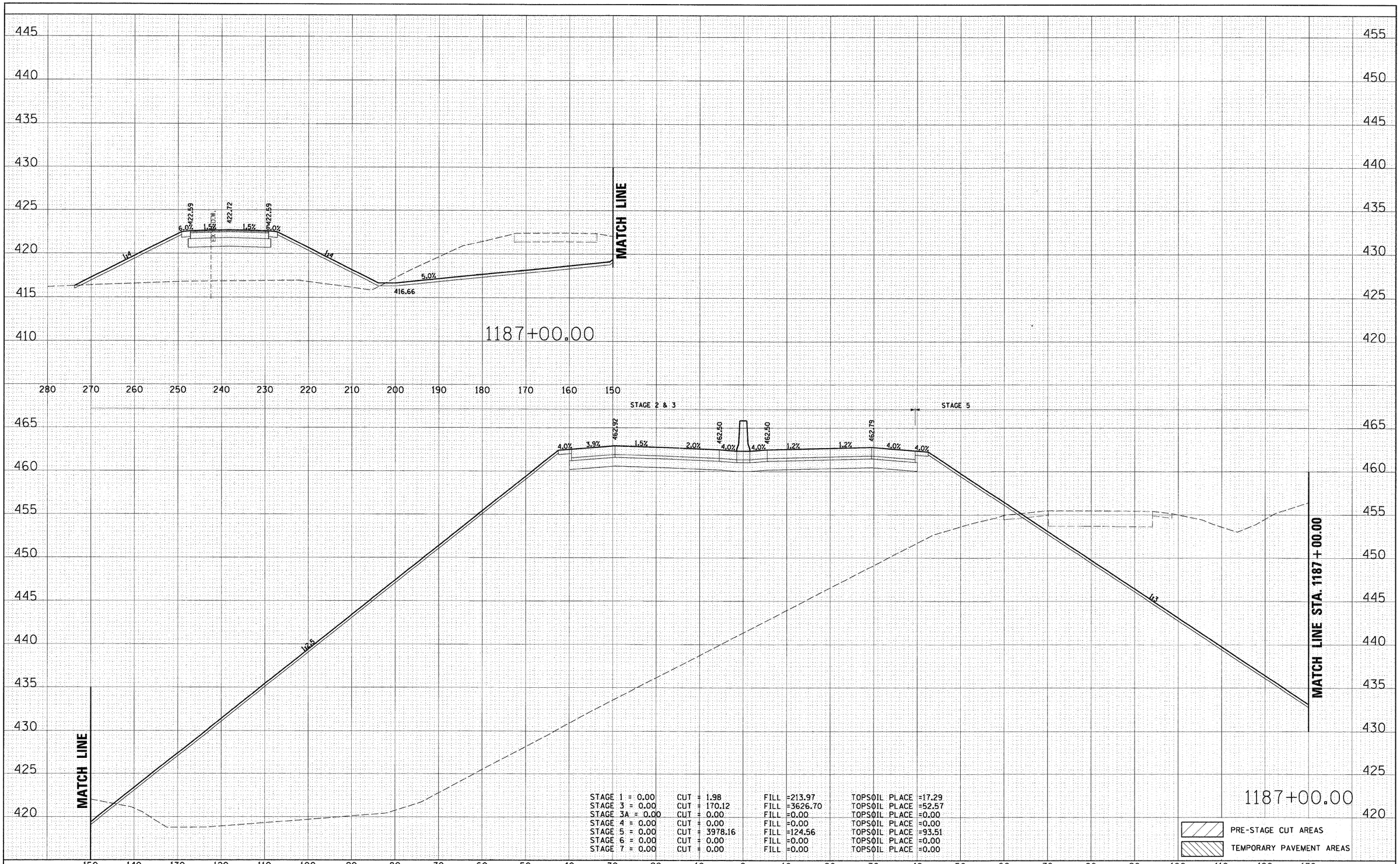

STAGE 1 = 0.00	CUT = 1.98	FILL =213.97	TOPSOIL PLACE =17.29
STAGE 3 = 0.00	CUT = 170.12	FILL =3626.70	TOPSOIL PLACE =52.57
STAGE 3A = 0.00	CUT = 0.00	FILL =0.00	TOPSOIL PLACE =0.00
STAGE 4 = 0.00	CUT = 0.00	FILL =0.00	TOPSOIL PLACE =0.00
STAGE 5 = 0.00	CUT = 3978.16	FILL =124.56	TOPSOIL PLACE =93.51
STAGE 6 = 0.00	CUT = 0.00	FILL =0.00	TOPSOIL PLACE =0.00
STAGE 7 = 0.00	CUT = 0.00	FILL =0.00	TOPSOIL PLACE =0.00

FINAL SURVEY — NOTE BOOK NO. — SURVEYED / PLOTTED / TEMPLATE / AREAS / AREAS CHECKED — BY — DATE

ORIGINAL SURVEY — NOTE BOOK NO. — SURVEYED / PLOTTED / TEMPLATE / AREAS / AREAS CHECKED — BY — DATE

FILE NAME = D876D91-sht-xs-270.dgn	USER NAME = malpez	DESIGNED SJM	REVISED -
		DRAWN BAH	REVISED -
	PLOT SCALE = $SCALE$	CHECKED -	REVISED -
	PLOT DATE = 3/17/2011	DATE -	REVISED -

STATE OF ILLINOIS
DEPARTMENT OF TRANSPORTATION

CROSS SECTIONS
INTERSTATE I-270

SCALE: | SHEET NO. OF SHEETS | STA. 1187+00.00 TO STA. 1187+00.00

F.A.I. RTE.	SECTION	COUNTY	TOTAL SHEETS	SHEET NO.
270	60-1B-1	MADISON	712	571
		CONTRACT NO. 76A91		
		ILLINOIS FED. AID PROJECT		

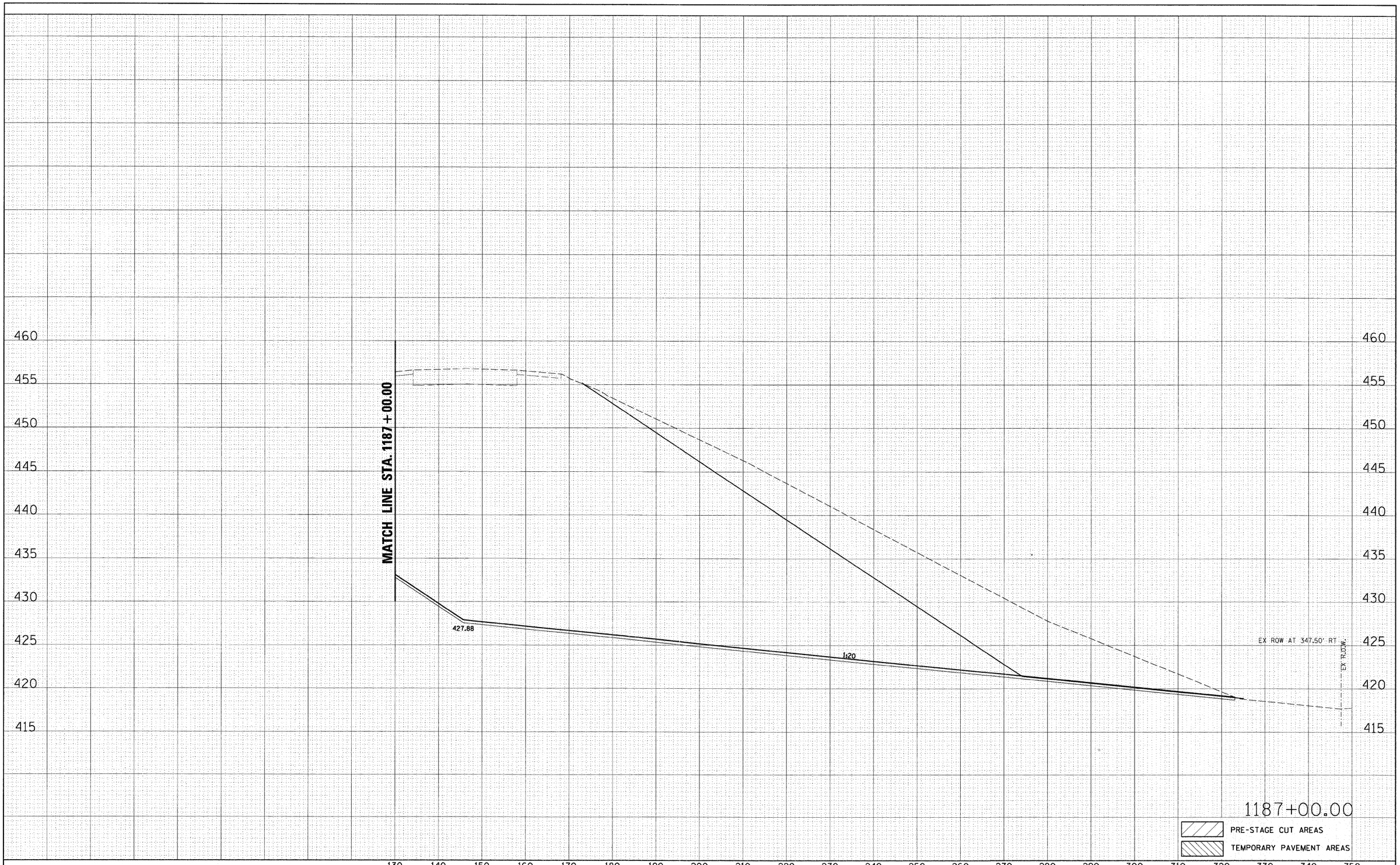

FINAL SURVEY	BY	DATE
SURVEYED		
PLOTTED		
TEMPLATE		
AREAS		
AREAS CHECKED		
NOTE BOOK NO.		

ORIGINAL SURVEY	BY	DATE
SURVEYED		
PLOTTED		
TEMPLATE		
AREAS		
AREAS CHECKED		
NOTE BOOK NO.		

FILE NAME = D876091-sht-xs-270.dgn	USER NAME = malopez	DESIGNED SJM	REVISED -
		DRAWN BAH	REVISED -
	PLOT SCALE = $SCALE$	CHECKED -	REVISED -
	PLOT DATE = 3/17/2011	DATE -	REVISED -

STATE OF ILLINOIS
DEPARTMENT OF TRANSPORTATION

CROSS SECTIONS
INTERSTATE I-270

SCALE: | SHEET NO. OF SHEETS | STA. 1187+00.00 TO STA. 1187+00.00

F.A.I. RTE.	SECTION	COUNTY	TOTAL SHEETS	SHEET NO.
270	60-1B-1	MADISON	712	572
		CONTRACT NO. 76A91		

ILLINOIS FED. AID PROJECT

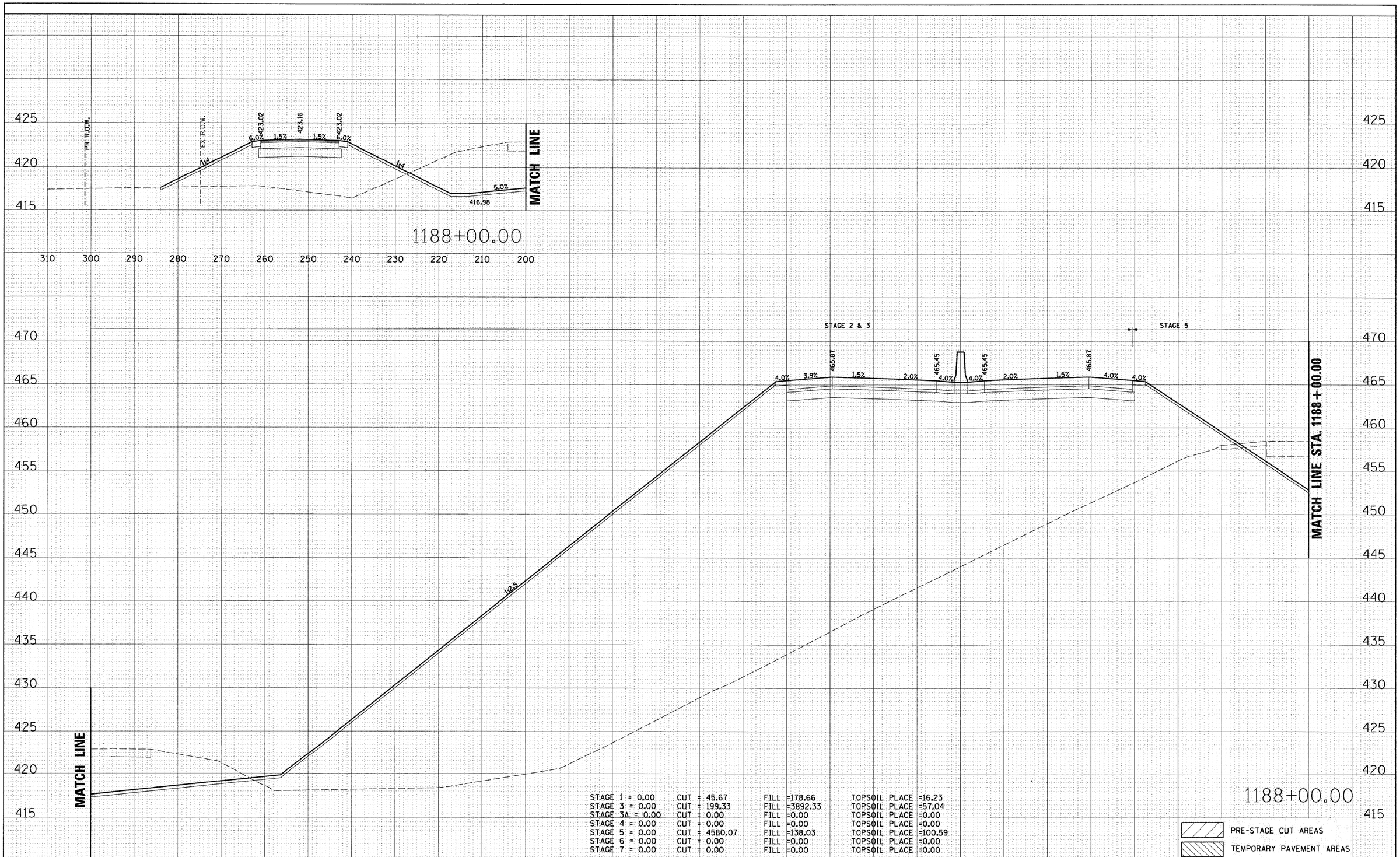

STAGE 1 = 0.00	CUT = 45.67	FILL =178.66	TOPSOIL PLACE =16.23
STAGE 3 = 0.00	CUT = 199.33	FILL =3892.33	TOPSOIL PLACE =57.04
STAGE 3A = 0.00	CUT = 0.00	FILL =0.00	TOPSOIL PLACE =0.00
STAGE 4 = 0.00	CUT = 0.00	FILL =0.00	TOPSOIL PLACE =0.00
STAGE 5 = 0.00	CUT = 4580.07	FILL =138.03	TOPSOIL PLACE =100.59
STAGE 6 = 0.00	CUT = 0.00	FILL =0.00	TOPSOIL PLACE =0.00
STAGE 7 = 0.00	CUT = 0.00	FILL =0.00	TOPSOIL PLACE =0.00

FINAL SURVEY		BY	DATE
NOTE BOOK NO.	SURVEYED		
	PLOTTED		
	TEMPLATE		
	AREAS		
	AREAS CHECKED		

ORIGINAL SURVEY		BY	DATE
NOTE BOOK NO.	SURVEYED		
	PLOTTED		
	TEMPLATE		
	AREAS		
	AREAS CHECKED		

FILE NAME = 0876D91-sht-xs-270.dgn	USER NAME = malopez	DESIGNED SJM	REVISED -
		DRAWN BAH	REVISED -
	PLOT SCALE = $SCALE$	CHECKED -	REVISED -
	PLOT DATE = 3/17/2011	DATE -	REVISED -

STATE OF ILLINOIS
DEPARTMENT OF TRANSPORTATION

CROSS SECTIONS
INTERSTATE I-270

SCALE: | SHEET NO. OF SHEETS | STA. 1188+00.00 TO STA. 1188+00.00

F.A.I. RTE.	SECTION	COUNTY	TOTAL SHEETS	SHEET NO.
270	60-1B-1	MADISON	712	573

CONTRACT NO. 76A91

ILLINOIS FED. AID PROJECT

FINAL SURVEY	BY	DATE
SURVEYED		
PLOTTED		
TEMPLATE		
AREAS		
AREAS CHECKED		
NOTE BOOK NO.		

ORIGINAL SURVEY	BY	DATE
SURVEYED		
PLOTTED		
TEMPLATE		
AREAS		
AREAS CHECKED		
NOTE BOOK NO.		

FILE NAME = D876D91-sht-xs-270.dgn	USER NAME = malopez	DESIGNED SJM	REVISED -
		DRAWN BAH	REVISED -
	PLOT SCALE = $SCALE$	CHECKED -	REVISED -
	PLOT DATE = 3/17/2011	DATE -	REVISED -

STATE OF ILLINOIS
DEPARTMENT OF TRANSPORTATION

CROSS SECTIONS
INTERSTATE I-270

SCALE: | SHEET NO. OF SHEETS | STA. 1188+00.00 TO STA. 1188+00.00

F.A.I. RTE.	SECTION	COUNTY	TOTAL SHEETS	SHEET NO.
270	60-1B-1	MADISON	712	574

CONTRACT NO. 76A91

ILLINOIS FED. AID PROJECT

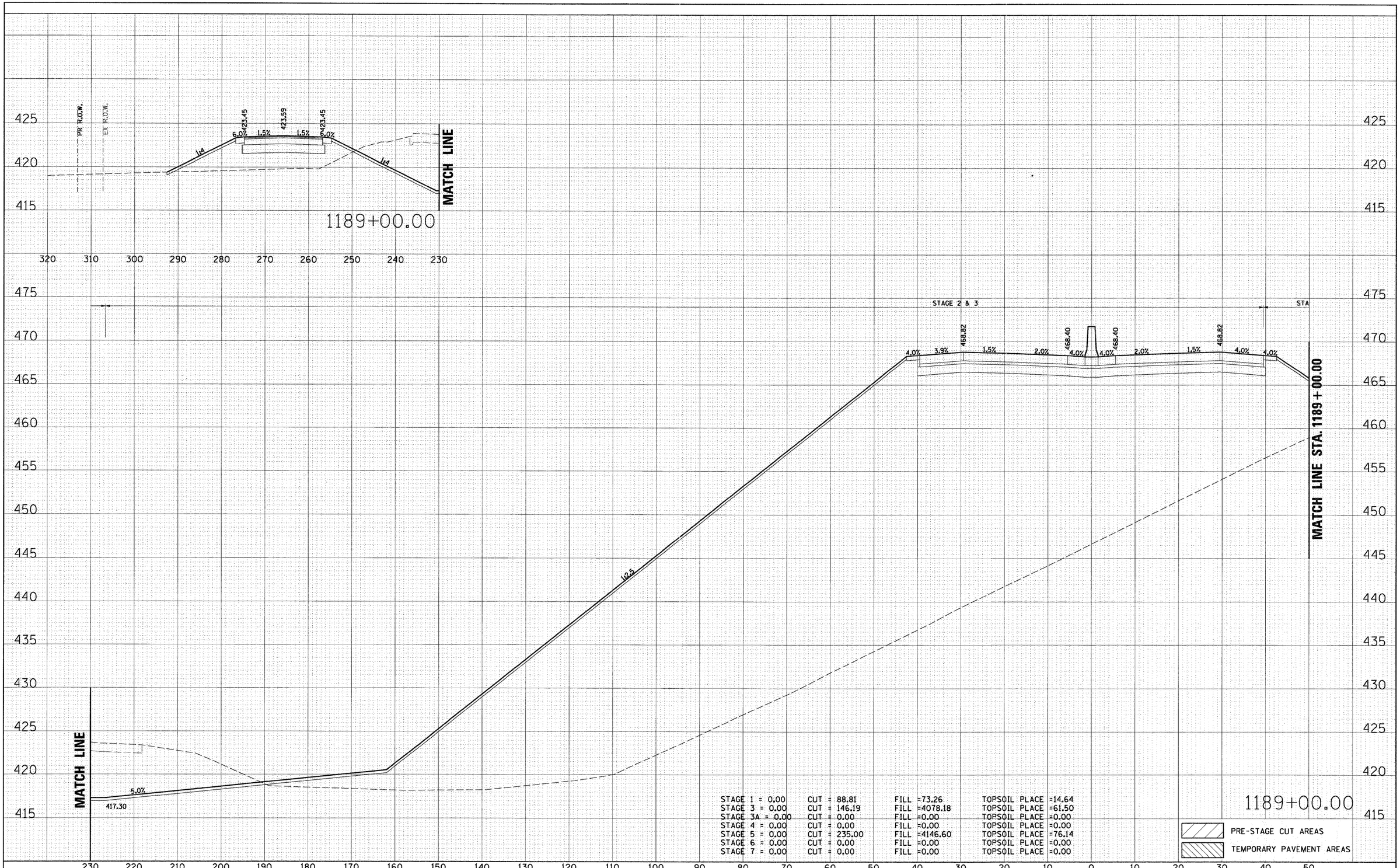

STAGE 1 = 0.00	CUT = 88.81	FILL =73.26	TOPSOIL PLACE =14.64
STAGE 3 = 0.00	CUT = 146.19	FILL =4078.18	TOPSOIL PLACE =61.50
STAGE 3A = 0.00	CUT = 0.00	FILL =0.00	TOPSOIL PLACE =0.00
STAGE 4 = 0.00	CUT = 0.00	FILL =0.00	TOPSOIL PLACE =0.00
STAGE 5 = 0.00	CUT = 235.00	FILL =4146.60	TOPSOIL PLACE =76.14
STAGE 6 = 0.00	CUT = 0.00	FILL =0.00	TOPSOIL PLACE =0.00
STAGE 7 = 0.00	CUT = 0.00	FILL =0.00	TOPSOIL PLACE =0.00

FINAL SURVEY — NOTE BOOK NO. — SURVEYED — PLOTTED — TEMPLATE — AREAS — AREAS CHECKED — BY — DATE

ORIGINAL SURVEY — NOTE BOOK NO. — SURVEYED — PLOTTED — TEMPLATE — AREAS — AREAS CHECKED — BY — DATE

FILE NAME = D876D91-sht-xs-270.dgn	USER NAME = malopez	DESIGNED SJM	REVISED -
		DRAWN BAH	REVISED -
	PLOT SCALE = $SCALE$	CHECKED -	REVISED -
	PLOT DATE = 3/17/2011	DATE -	REVISED -

STATE OF ILLINOIS
DEPARTMENT OF TRANSPORTATION

CROSS SECTIONS
INTERSTATE I-270

SCALE: | SHEET NO. OF SHEETS | STA. 1189+00.00 TO STA. 1189+00.00

F.A.I. RTE.	SECTION	COUNTY	TOTAL SHEETS	SHEET NO.
270	60-1B-1	MADISON	712	575

CONTRACT NO. 76A91

ILLINOIS FED. AID PROJECT

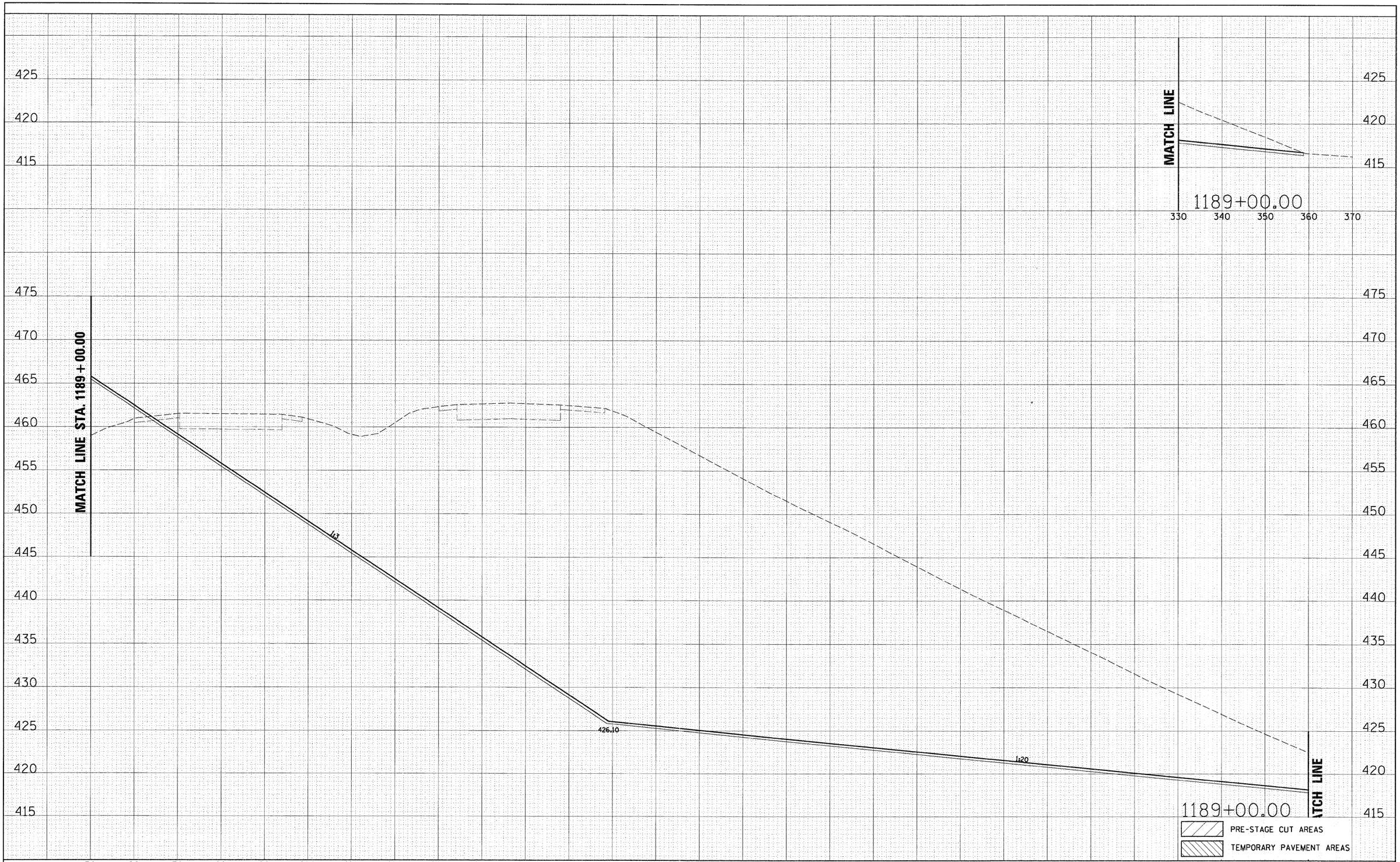

FINAL SURVEY	BY	DATE
SURVEYED		
PLOTTED		
TEMPLATE		
AREAS		
AREAS CHECKED		
NOTE BOOK NO.		

ORIGINAL SURVEY	BY	DATE
SURVEYED		
PLOTTED		
TEMPLATE		
AREAS		
AREAS CHECKED		
NOTE BOOK NO.		

FILE NAME = D876D91-sht-xs-270.dgn	USER NAME = malopez	DESIGNED SJM	REVISED -
		DRAWN BAH	REVISED -
	PLOT SCALE = $SCALE$	CHECKED -	REVISED -
	PLOT DATE = 3/17/2011	DATE -	REVISED -

STATE OF ILLINOIS
DEPARTMENT OF TRANSPORTATION

CROSS SECTIONS
INTERSTATE I-270

SCALE: | SHEET NO. OF SHEETS | STA. 1189+00.00 TO STA. 1189+00.00

F.A.I. RTE.	SECTION	COUNTY	TOTAL SHEETS	SHEET NO.
270	60-18-1	MADISON	712	576
		CONTRACT NO. 76A91		

ILLINOIS FED. AID PROJECT

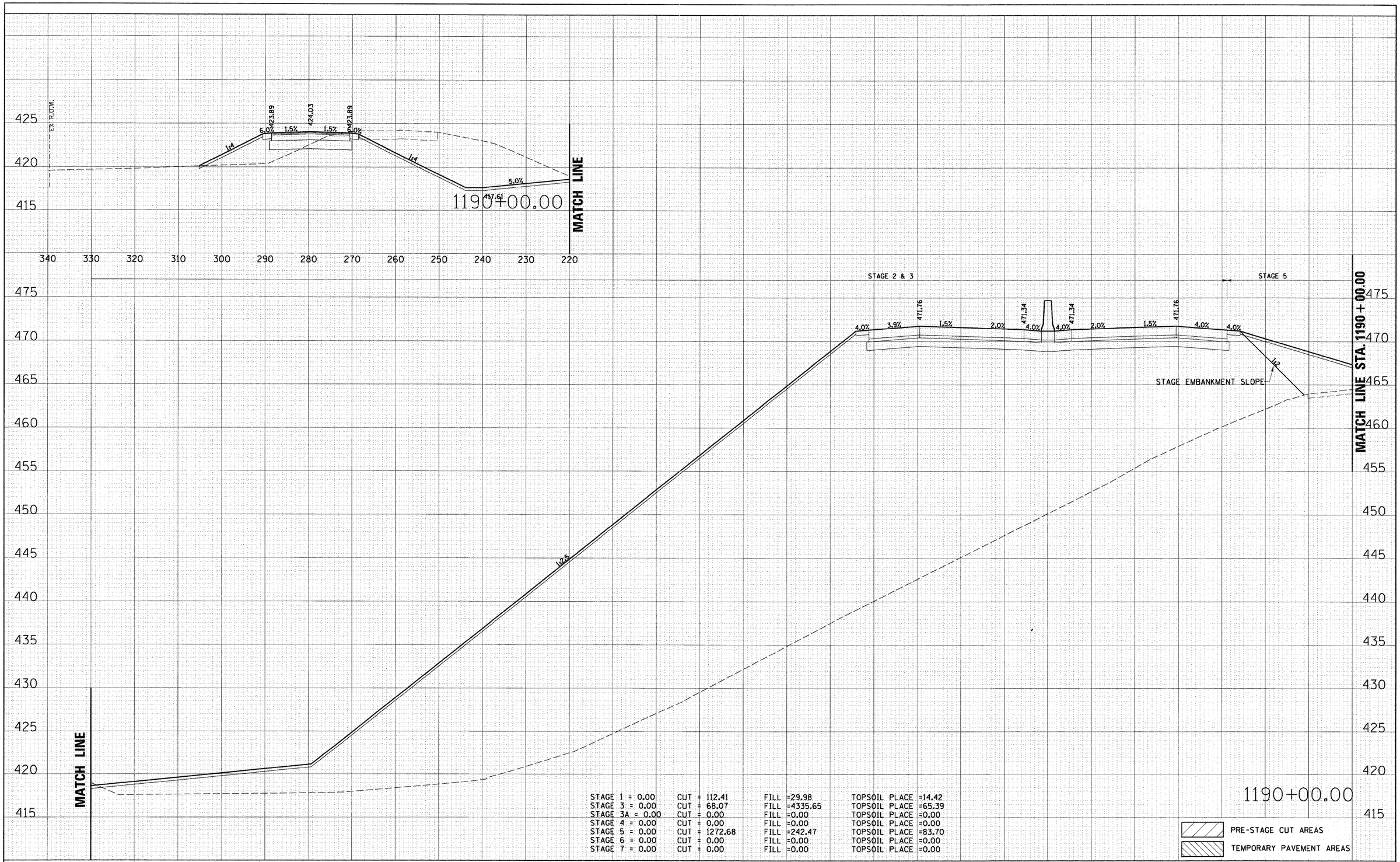

STAGE 1 = 0.00	CUT = 112.41	FILL =29.98	TOPSOIL PLACE =14.42	
STAGE 3 = 0.00	CUT = 68.07	FILL =4335.65	TOPSOIL PLACE =65.39	
STAGE 3A = 0.00	CUT = 0.00	FILL =0.00	TOPSOIL PLACE =0.00	
STAGE 4 = 0.00	CUT = 0.00	FILL =0.00	TOPSOIL PLACE =0.00	
STAGE 5 = 0.00	CUT = 1272.68	FILL =242.47	TOPSOIL PLACE =83.70	
STAGE 6 = 0.00	CUT = 0.00	FILL =0.00	TOPSOIL PLACE =0.00	
STAGE 7 = 0.00	CUT = 0.00	FILL =0.00	TOPSOIL PLACE =0.00	

FINAL SURVEY	DATE	BY
SURVEYED		
PLOTTED		
TEMPLATE		
AREAS		
AREAS CHECKED		
NOTE BOOK NO.		

ORIGINAL SURVEY	DATE	BY
SURVEYED		
PLOTTED		
TEMPLATE		
AREAS		
AREAS CHECKED		
NOTE BOOK NO.		

FILE NAME = D876091-sht-xs-270.dgn	USER NAME = malopez	DESIGNED SJM	REVISED -
		DRAWN BAH	REVISED -
	PLOT SCALE = $SCALE$	CHECKED -	REVISED -
	PLOT DATE = 3/17/2011	DATE -	REVISED -

STATE OF ILLINOIS
DEPARTMENT OF TRANSPORTATION

CROSS SECTIONS
INTERSTATE I-270

SCALE: | SHEET NO. OF SHEETS | STA. 1190+00.00 TO STA. 1190+00.00

F.A.I. RTE.	SECTION	COUNTY	TOTAL SHEETS	SHEET NO.
270	60-1B-1	MADISON	712	577
		CONTRACT NO. 76A91		
	ILLINOIS FED. AID PROJECT			

FINAL SURVEY	BY	DATE
SURVEYED		
PLOTTED		
TEMPLATE		
AREAS		
AREAS CHECKED		
NOTE BOOK NO.		

ORIGINAL SURVEY	BY	DATE
SURVEYED		
PLOTTED		
TEMPLATE		
AREAS		
AREAS CHECKED		
NOTE BOOK NO.		

FILE NAME = D876091-sht-xs-270.dgn	USER NAME = malopez	DESIGNED SJM	REVISED -
		DRAWN BAH	REVISED -
	PLOT SCALE = $SCALE$	CHECKED -	REVISED -
	PLOT DATE = 3/17/2011	DATE -	REVISED -

STATE OF ILLINOIS
DEPARTMENT OF TRANSPORTATION

CROSS SECTIONS
INTERSTATE I-270

SCALE: | SHEET NO. OF SHEETS | STA. 1190+00.00 TO STA. 1190+00.00

F.A.I. RTE.	SECTION	COUNTY	TOTAL SHEETS	SHEET NO.
270	60-1B-1	MADISON	712	578
		CONTRACT NO. 76A91		
	ILLINOIS FED. AID PROJECT			

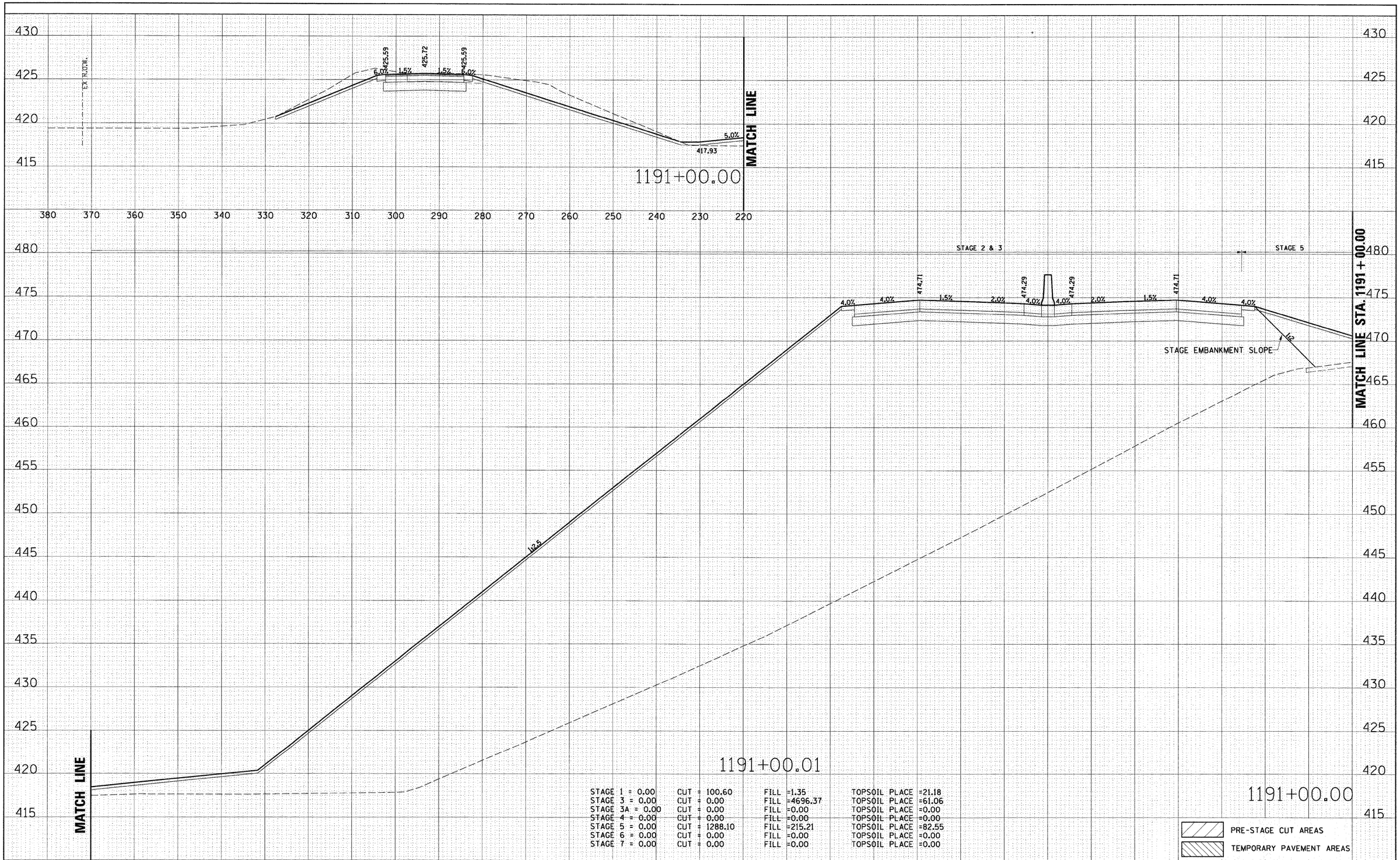

STAGE 1 = 0.00	CUT = 100.60	FILL =1.35	TOPSOIL PLACE =21.18		
STAGE 3 = 0.00	CUT = 0.00	FILL =4696.37	TOPSOIL PLACE =61.06		
STAGE 3A = 0.00	CUT = 0.00	FILL =0.00	TOPSOIL PLACE =0.00		
STAGE 4 = 0.00	CUT = 0.00	FILL =0.00	TOPSOIL PLACE =0.00		
STAGE 5 = 0.00	CUT = 1288.10	FILL =215.21	TOPSOIL PLACE =82.55		
STAGE 6 = 0.00	CUT = 0.00	FILL =0.00	TOPSOIL PLACE =0.00		
STAGE 7 = 0.00	CUT = 0.00	FILL =0.00	TOPSOIL PLACE =0.00		

FINAL SURVEY	BY	DATE
SURVEYED		
PLOTTED		
TEMPLATE		
AREAS		
AREAS CHECKED		
NOTE BOOK NO.		

ORIGINAL SURVEY	BY	DATE
SURVEYED		
PLOTTED		
TEMPLATE		
AREAS		
AREAS CHECKED		
NOTE BOOK NO.		

FILE NAME = D876D91-sht-xs-270.dgn	USER NAME = malopez	DESIGNED SJM	REVISED -
		DRAWN BAH	REVISED -
	PLOT SCALE = $SCALE$	CHECKED -	REVISED -
	PLOT DATE = 3/17/2011	DATE -	REVISED -

STATE OF ILLINOIS
DEPARTMENT OF TRANSPORTATION

CROSS SECTIONS
INTERSTATE I-270

SCALE: | SHEET NO. OF SHEETS | STA. 1191+00.00 TO STA. 1191+00.00

F.A.I. RTE.	SECTION	COUNTY	TOTAL SHEETS	SHEET NO.
270	60-1B-1	MADISON	712	579

CONTRACT NO. 76A91

ILLINOIS FED. AID PROJECT

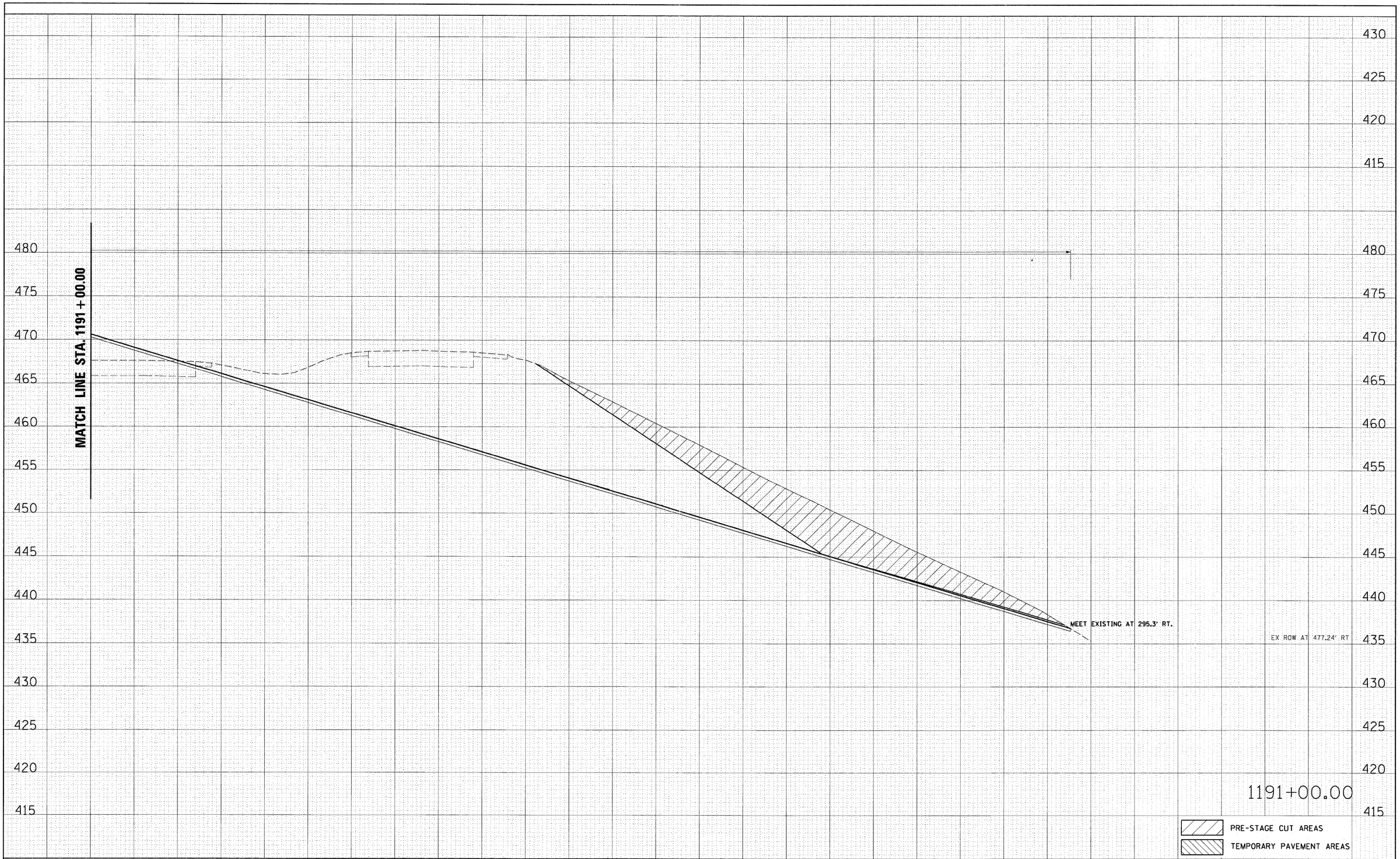

FINAL SURVEY	BY	DATE
SURVEYED		
PLOTTED		
TEMPLATE		
AREAS		
AREAS CHECKED		
NOTE BOOK NO.		

ORIGINAL SURVEY	BY	DATE
SURVEYED		
PLOTTED		
TEMPLATE		
AREAS		
AREAS CHECKED		
NOTE BOOK NO.		

FILE NAME = D876091-sht-xs-270.dgn	USER NAME = malopez	DESIGNED SJM	REVISED -
		DRAWN BAH	REVISED -
	PLOT SCALE = $SCALE$	CHECKED -	REVISED -
	PLOT DATE = 3/17/2011	DATE -	REVISED -

STATE OF ILLINOIS
DEPARTMENT OF TRANSPORTATION

CROSS SECTIONS
INTERSTATE I-270

SCALE: | SHEET NO. OF SHEETS | STA. 1191+00.00 TO STA. 1191+00.00

F.A.I. RTE.	SECTION	COUNTY	TOTAL SHEETS	SHEET NO.
270	60-1B-1	MADISON	712	580

CONTRACT NO. 76A91

ILLINOIS FED. AID PROJECT

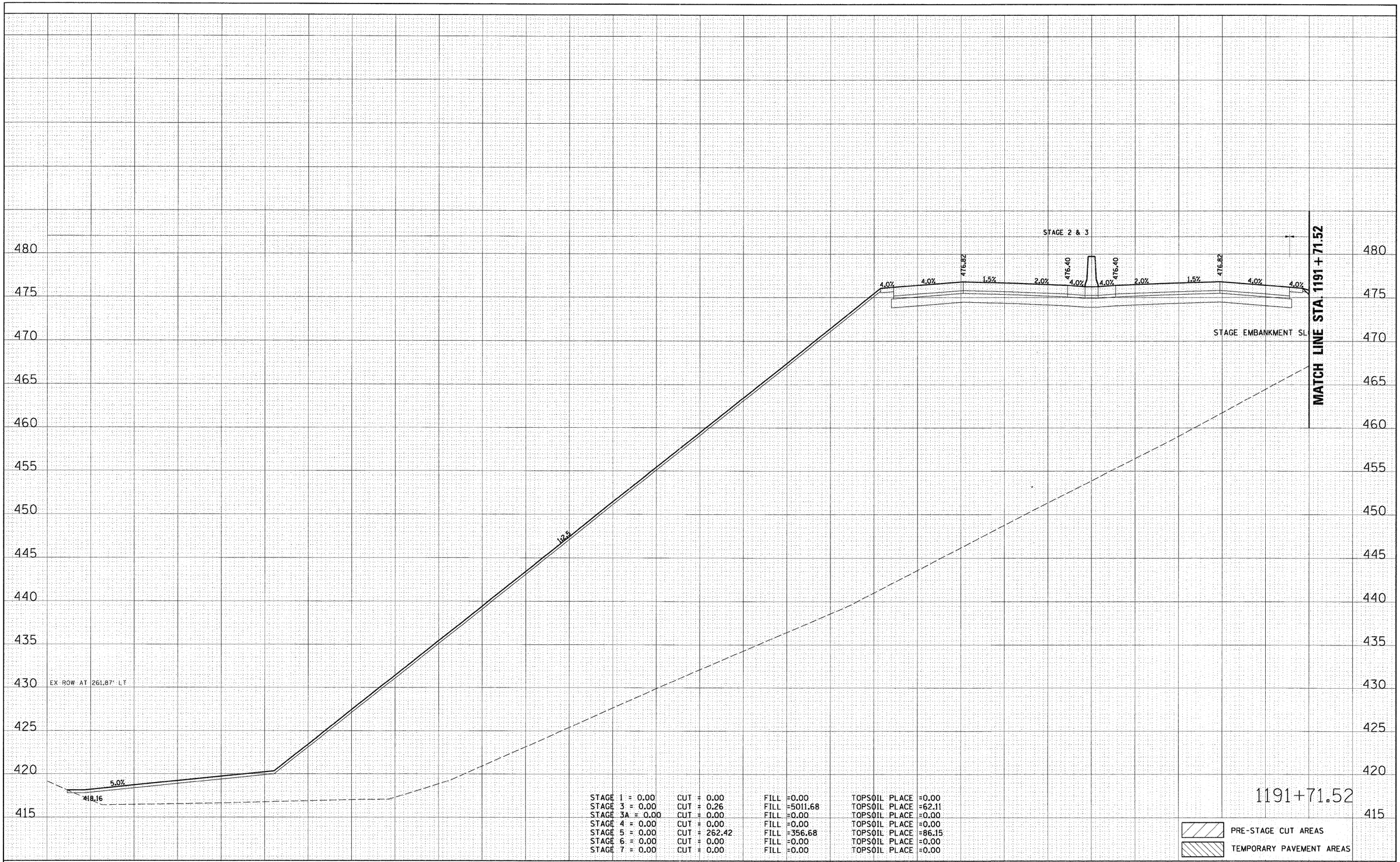

STAGE 1 = 0.00	CUT = 0.00	FILL =0.00	TOPSOIL PLACE =0.00
STAGE 3 = 0.00	CUT = 0.26	FILL =5011.68	TOPSOIL PLACE =62.11
STAGE 3A = 0.00	CUT = 0.00	FILL =0.00	TOPSOIL PLACE =0.00
STAGE 4 = 0.00	CUT = 0.00	FILL =0.00	TOPSOIL PLACE =0.00
STAGE 5 = 0.00	CUT = 262.42	FILL =356.68	TOPSOIL PLACE =86.15
STAGE 6 = 0.00	CUT = 0.00	FILL =0.00	TOPSOIL PLACE =0.00
STAGE 7 = 0.00	CUT = 0.00	FILL =0.00	TOPSOIL PLACE =0.00

FINAL SURVEY	BY	DATE
SURVEYED		
PLOTTED		
TEMPLATE		
AREAS		
AREAS CHECKED		
NOTE BOOK NO.		

ORIGINAL SURVEY	BY	DATE
SURVEYED		
PLOTTED		
TEMPLATE		
AREAS		
AREAS CHECKED		
NOTE BOOK NO.		

FILE NAME = D876D91-sht-xs-270.dgn	USER NAME = malopez	DESIGNED SJM	REVISED -
		DRAWN BAH	REVISED -
	PLOT SCALE = $SCALE$	CHECKED -	REVISED -
	PLOT DATE = 3/17/2011	DATE -	REVISED -

STATE OF ILLINOIS
DEPARTMENT OF TRANSPORTATION

CROSS SECTIONS
INTERSTATE I-270

SCALE: | SHEET NO. OF SHEETS | STA. 1191+71.52 TO STA. 1191+71.52

F.A.I. RTE.	SECTION	COUNTY	TOTAL SHEETS	SHEET NO.
270	60-1B-1	MADISON	712	581

CONTRACT NO. 76A91

ILLINOIS FED. AID PROJECT

FINAL SURVEY	BY	DATE
SURVEYED		
PLOTTED		
TEMPLATE		
AREAS		
AREAS CHECKED		
NOTE BOOK NO.		

ORIGINAL SURVEY	BY	DATE
SURVEYED		
PLOTTED		
TEMPLATE		
AREAS		
AREAS CHECKED		
NOTE BOOK NO.		

FILE NAME = D876D91-sht-xs-270.dgn	USER NAME = malopez	DESIGNED SJM	REVISED -
		DRAWN BAH	REVISED -
	PLOT SCALE = $SCALE$	CHECKED -	REVISED -
	PLOT DATE = 3/17/2011	DATE -	REVISED -

STATE OF ILLINOIS
DEPARTMENT OF TRANSPORTATION

CROSS SECTIONS
INTERSTATE I-270

SCALE: | SHEET NO. OF SHEETS | STA. 1191+71.52 TO STA. 1191+71.52

F.A.I. RTE.	SECTION	COUNTY	TOTAL SHEETS	SHEET NO.
270	60-1B-1	MADISON	712	582
		CONTRACT NO. 76A91		
		ILLINOIS FED. AID PROJECT		

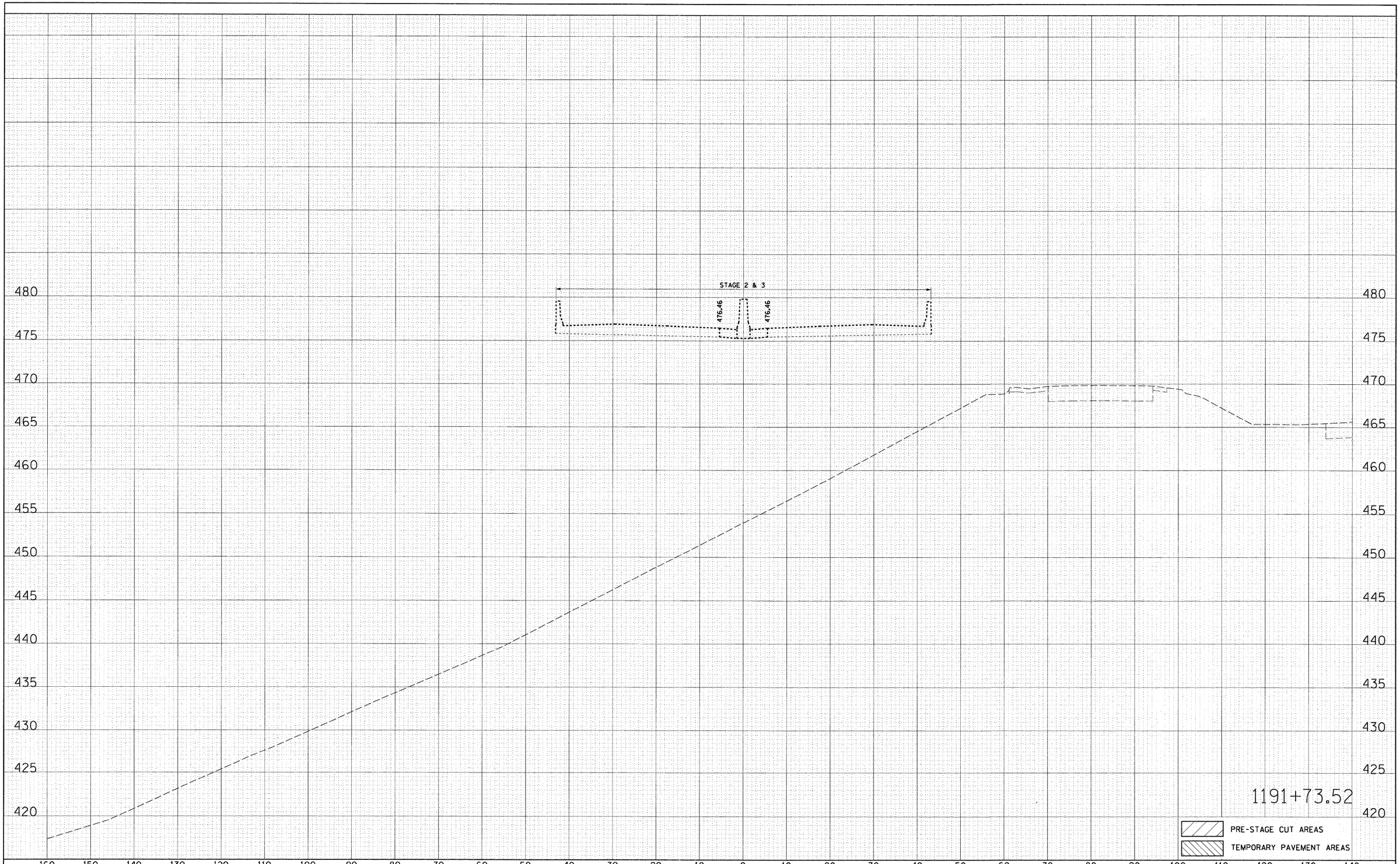

FINAL SURVEY	BY	DATE
SURVEYED		
PLOTTED		
TEMPLATE		
AREAS		
AREAS CHECKED		
NOTE BOOK NO.		

ORIGINAL SURVEY	BY	DATE
SURVEYED		
PLOTTED		
TEMPLATE		
AREAS		
AREAS CHECKED		
NOTE BOOK NO.		

FILE NAME = D876D91-sht-xs-270.dgn	USER NAME = malopez	DESIGNED SJM	REVISED -
		DRAWN BAH	REVISED -
	PLOT SCALE = $SCALE$	CHECKED -	REVISED -
	PLOT DATE = 3/17/2011	DATE -	REVISED -

STATE OF ILLINOIS
DEPARTMENT OF TRANSPORTATION

CROSS SECTIONS
INTERSTATE I-270

SCALE: | SHEET NO. OF SHEETS | STA. 1191+73.52 TO STA. 1191+73.52

F.A.I. RTE.	SECTION	COUNTY	TOTAL SHEETS	SHEET NO.
270	60-1B-1	MADISON	712	583
		CONTRACT NO. 76A91		
		ILLINOIS FED. AID PROJECT		

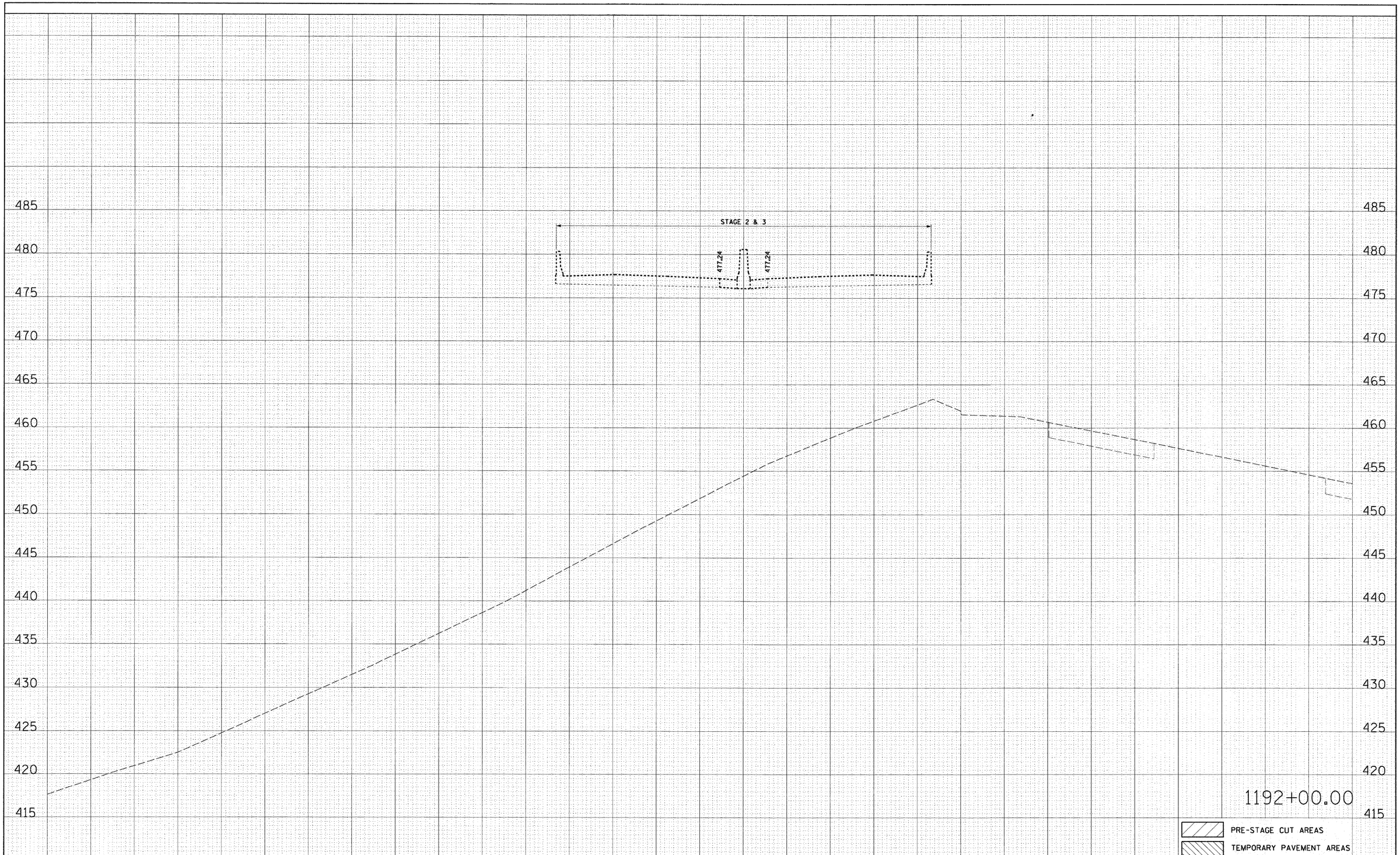

FINAL SURVEY	BY	DATE
SURVEYED		
PLOTTED		
TEMPLATE		
AREAS		
AREAS CHECKED		
NOTE BOOK NO.		

ORIGINAL SURVEY	BY	DATE
SURVEYED		
PLOTTED		
TEMPLATE		
AREAS		
AREAS CHECKED		
NOTE BOOK NO.		

FILE NAME = D876D91-sht-xs-270.dgn	USER NAME = malopez	DESIGNED SJM	REVISED -
		DRAWN BAH	REVISED -
	PLOT SCALE = $SCALE$	CHECKED -	REVISED -
	PLOT DATE = 3/17/2011	DATE -	REVISED -

STATE OF ILLINOIS
DEPARTMENT OF TRANSPORTATION

CROSS SECTIONS
INTERSTATE I-270

SCALE: | SHEET NO. OF SHEETS | STA. 1192+00.00 TO STA. 1192+00.00

F.A.I. RTE.	SECTION	COUNTY	TOTAL SHEETS	SHEET NO.
270	60-1B-1	MADISON	712	584

CONTRACT NO. 76A91

ILLINOIS FED. AID PROJECT

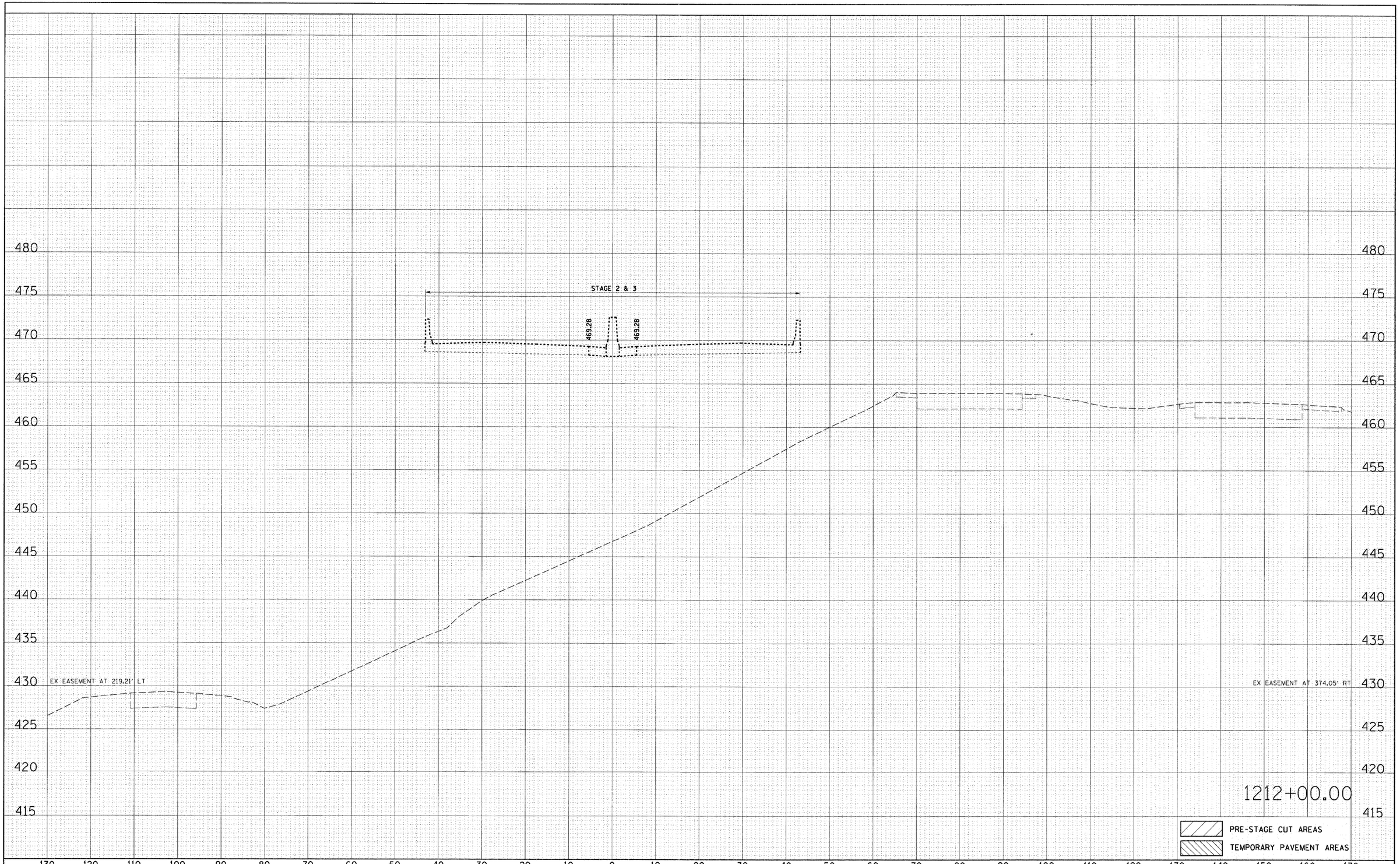

FINAL SURVEY	BY	DATE
SURVEYED		
PLOTTED		
TEMPLATE		
AREAS		
AREAS CHECKED		
NOTE BOOK NO.		

ORIGINAL SURVEY	BY	DATE
SURVEYED		
PLOTTED		
TEMPLATE		
AREAS		
AREAS CHECKED		
NOTE BOOK NO.		

FILE NAME = D876D91-sht-xs-270.dgn	USER NAME = melopez	DESIGNED SJM	REVISED -
		DRAWN BAH	REVISED -
	PLOT SCALE = $SCALE$	CHECKED -	REVISED -
	PLOT DATE = 3/17/2011	DATE -	REVISED -

STATE OF ILLINOIS
DEPARTMENT OF TRANSPORTATION

CROSS SECTIONS
INTERSTATE I-270

SCALE: | SHEET NO. OF SHEETS | STA. 1212+00.00 TO STA. 1212+00.00

F.A.I. RTE.	SECTION	COUNTY	TOTAL SHEETS	SHEET NO.
270	60-1B-1	MADISON	712	585

CONTRACT NO. 76A91

ILLINOIS FED. AID PROJECT

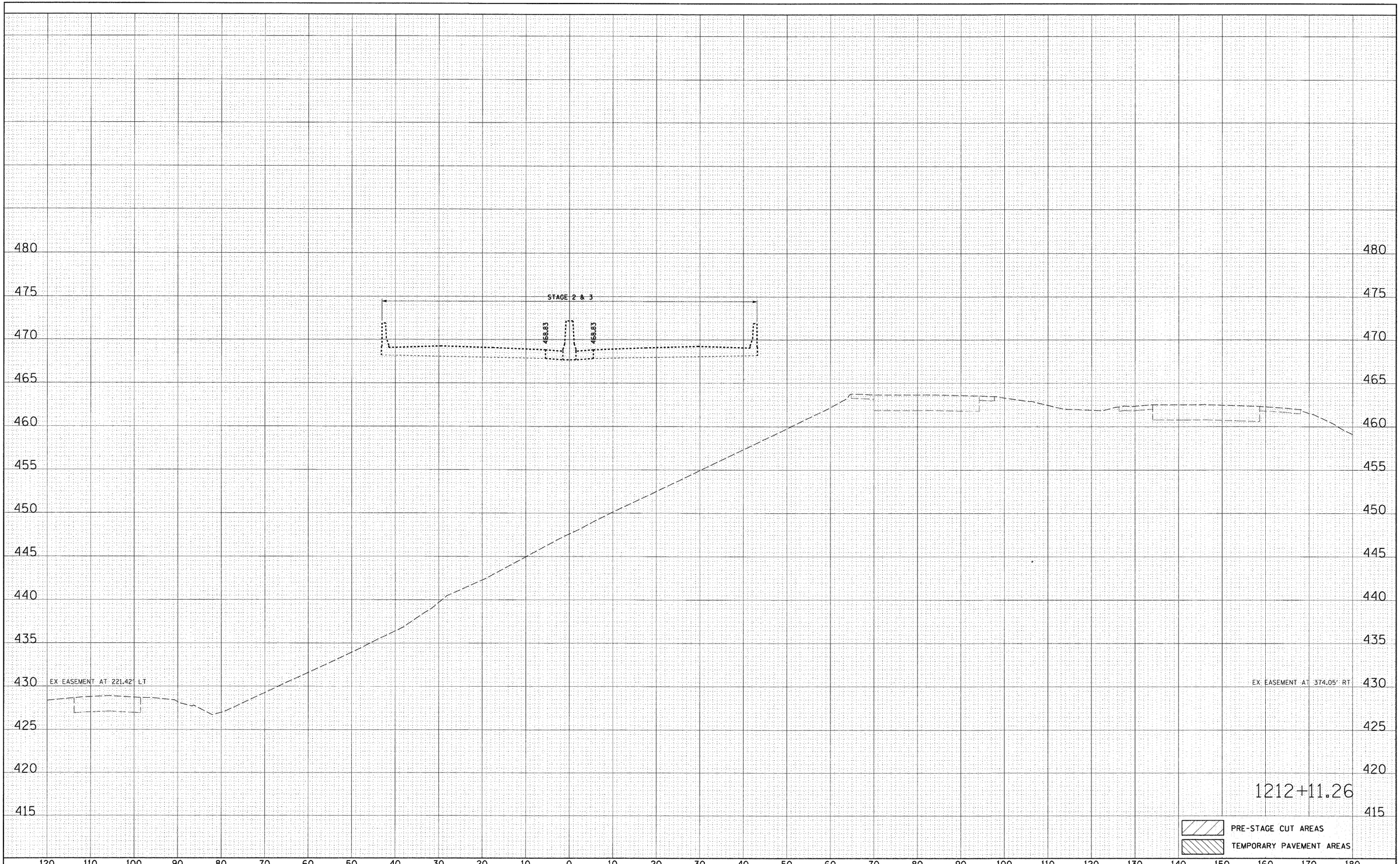

FINAL SURVEY	BY	DATE
SURVEYED		
PLOTTED		
TEMPLATE		
AREAS		
AREAS CHECKED		
NOTE BOOK NO.		

ORIGINAL SURVEY	BY	DATE
SURVEYED		
PLOTTED		
TEMPLATE		
AREAS		
AREAS CHECKED		
NOTE BOOK NO.		

FILE NAME = D876091-sht-xs-270.dgn	USER NAME = malopez	DESIGNED SJM	REVISED -
		DRAWN BAH	REVISED -
	PLOT SCALE = $SCALE$	CHECKED -	REVISED -
	PLOT DATE = 3/17/2011	DATE -	REVISED -

STATE OF ILLINOIS
DEPARTMENT OF TRANSPORTATION

CROSS SECTIONS
INTERSTATE I-270

SCALE: | SHEET NO. OF SHEETS | STA. 1212+11.26 TO STA. 1212+11.26

F.A.I. RTE.	SECTION	COUNTY	TOTAL SHEETS	SHEET NO.
270	60-1B-1	MADISON	712	586

CONTRACT NO. 76A91

ILLINOIS FED. AID PROJECT

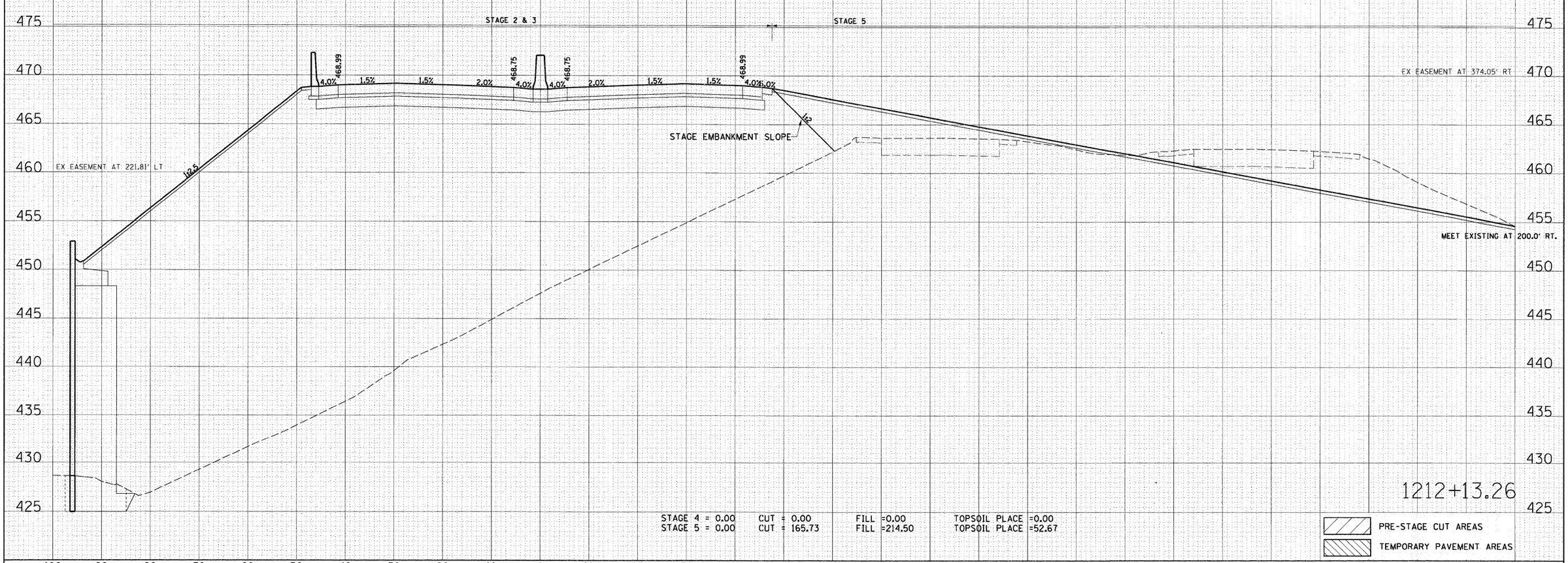

STAGE 4 = 0.00 CUT = 0.00 FILL =0.00 TOPSOIL PLACE =0.00
STAGE 5 = 0.00 CUT = 165.73 FILL =214.50 TOPSOIL PLACE =52.67

PRE-STAGE CUT AREAS

TEMPORARY PAVEMENT AREAS

FINAL SURVEY	BY	DATE
SURVEYED		
PLOTTED		
TEMPLATE		
AREAS		
AREAS CHECKED		
NOTE BOOK NO.		

ORIGINAL SURVEY	BY	DATE
SURVEYED		
PLOTTED		
TEMPLATE		
AREAS		
AREAS CHECKED		
NOTE BOOK NO.		

FILE NAME = D876D91-sht-xs-270.dgn	USER NAME = malopez	DESIGNED SJM	REVISED -
		DRAWN BAH	REVISED -
	PLOT SCALE = $SCALE$	CHECKED -	REVISED -
	PLOT DATE = 3/17/2011	DATE -	REVISED -

STATE OF ILLINOIS
DEPARTMENT OF TRANSPORTATION

CROSS SECTIONS
INTERSTATE I-270

SCALE: | SHEET NO. OF SHEETS | STA. 1212+13.26 TO STA. 1212+13.26

F.A.I. RTE.	SECTION	COUNTY	TOTAL SHEETS	SHEET NO.
270	60-1B-1	MADISON	712	587

CONTRACT NO. 76A91

ILLINOIS FED. AID PROJECT

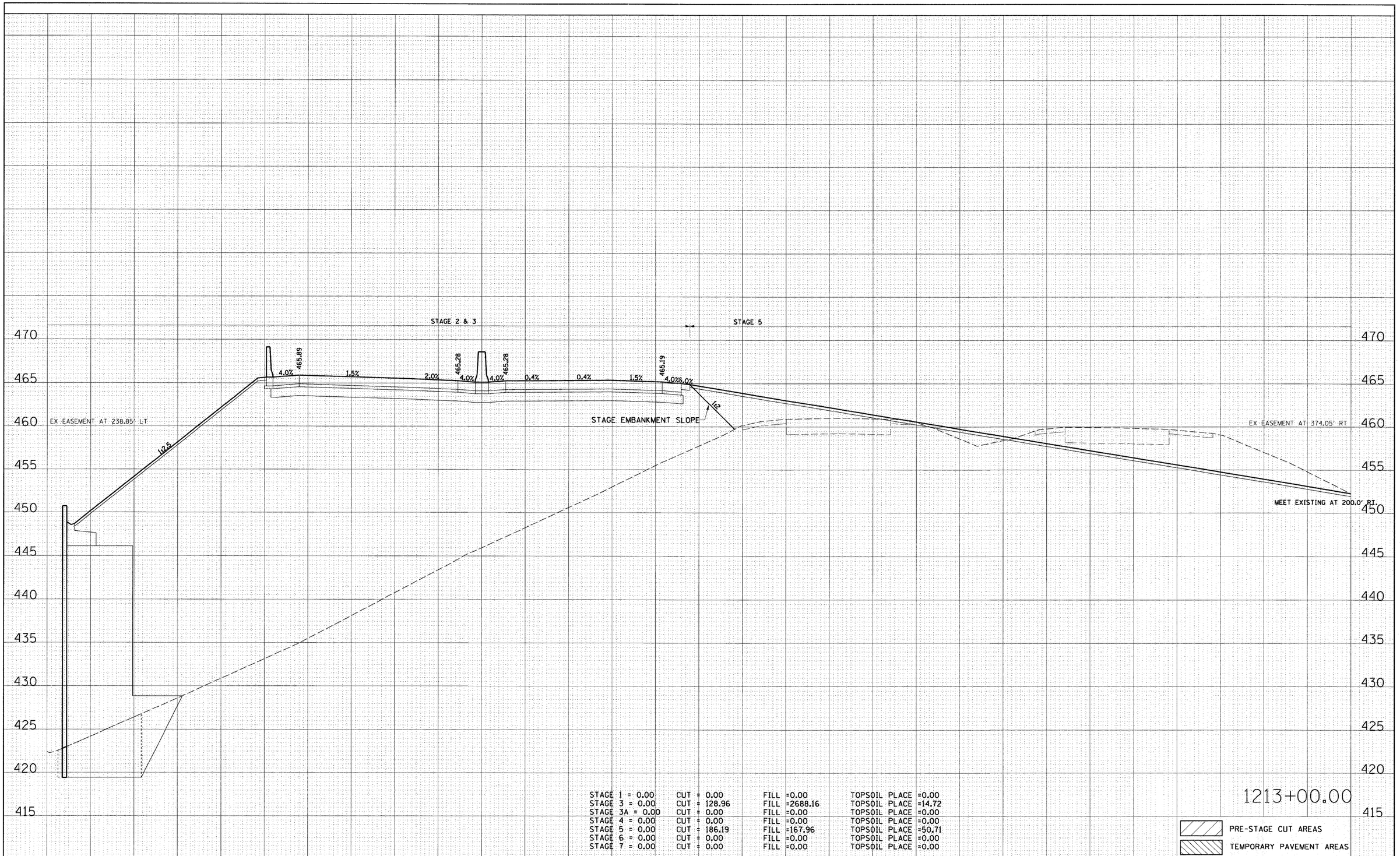

STAGE 1 = 0.00	CUT = 0.00	FILL =0.00	TOPSOIL PLACE =0.00		
STAGE 3 = 0.00	CUT = 128.96	FILL =2688.16	TOPSOIL PLACE =14.72		
STAGE 3A = 0.00	CUT = 0.00	FILL =0.00	TOPSOIL PLACE =0.00		
STAGE 4 = 0.00	CUT = 0.00	FILL =0.00	TOPSOIL PLACE =0.00		
STAGE 5 = 0.00	CUT = 186.19	FILL =167.96	TOPSOIL PLACE =50.71		
STAGE 6 = 0.00	CUT = 0.00	FILL =0.00	TOPSOIL PLACE =0.00		
STAGE 7 = 0.00	CUT = 0.00	FILL =0.00	TOPSOIL PLACE =0.00		

1213+00.00

PRE-STAGE CUT AREAS

TEMPORARY PAVEMENT AREAS

FINAL SURVEY	BY	DATE
SURVEYED		
PLOTTED		
TEMPLATE		
AREAS		
AREAS CHECKED		
NOTE BOOK NO.		

ORIGINAL SURVEY	BY	DATE
SURVEYED		
PLOTTED		
TEMPLATE		
AREAS		
AREAS CHECKED		
NOTE BOOK NO.		

FILE NAME = D876091-sht-xs-270.dgn	USER NAME = malopez	DESIGNED SJM	REVISED -
		DRAWN BAH	REVISED -
	PLOT SCALE = $SCALE$	CHECKED -	REVISED -
	PLOT DATE = 3/17/2011	DATE -	REVISED -

STATE OF ILLINOIS
DEPARTMENT OF TRANSPORTATION

CROSS SECTIONS
INTERSTATE I-270

SCALE: | SHEET NO. OF SHEETS | STA. 1213+00.00 TO STA. 1213+00.00

F.A.I. RTE.	SECTION	COUNTY	TOTAL SHEETS	SHEET NO.
270	60-1B-1	MADISON	712	588

CONTRACT NO. 76A91

ILLINOIS FED. AID PROJECT

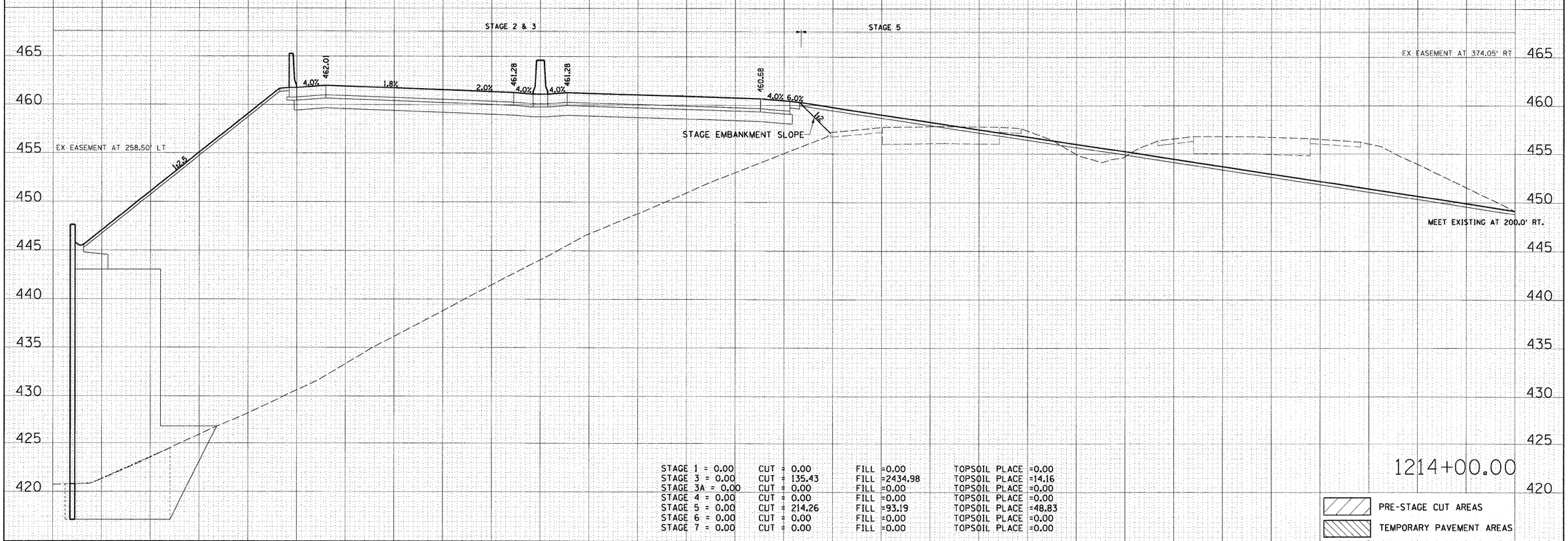

STAGE 1 = 0.00	CUT = 0.00	FILL =0.00	TOPSOIL PLACE =0.00	
STAGE 3 = 0.00	CUT = 135.43	FILL =2434.98	TOPSOIL PLACE =14.16	
STAGE 3A = 0.00	CUT = 0.00	FILL =0.00	TOPSOIL PLACE =0.00	
STAGE 4 = 0.00	CUT = 0.00	FILL =0.00	TOPSOIL PLACE =0.00	
STAGE 5 = 0.00	CUT = 214.26	FILL =93.19	TOPSOIL PLACE =48.83	
STAGE 6 = 0.00	CUT = 0.00	FILL =0.00	TOPSOIL PLACE =0.00	
STAGE 7 = 0.00	CUT = 0.00	FILL =0.00	TOPSOIL PLACE =0.00	

FINAL SURVEY	BY	DATE
SURVEYED		
PLOTTED		
TEMPLATE		
AREAS		
AREAS CHECKED		
NOTE BOOK NO.		

ORIGINAL SURVEY	BY	DATE
SURVEYED		
PLOTTED		
TEMPLATE		
AREAS		
AREAS CHECKED		
NOTE BOOK NO.		

100 90 80 70 60 50 40 30 20 10 0 10 20 30 40 50 60 70 80 90 100 110 120 130 140 150 160 170 180 190 200

FILE NAME = 0876D91-sht-xs-270.dgn	USER NAME = melopez	DESIGNED SJM	REVISED -
		DRAWN BAH	REVISED -
	PLOT SCALE = $SCALE$	CHECKED -	REVISED -
	PLOT DATE = 3/17/2011	DATE -	REVISED -

STATE OF ILLINOIS
DEPARTMENT OF TRANSPORTATION

CROSS SECTIONS
INTERSTATE I-270

SCALE: | SHEET NO. OF SHEETS | STA. 1214+00.00 TO STA. 1214+00.00

F.A.I. RTE.	SECTION	COUNTY	TOTAL SHEETS	SHEET NO.
270	60-1B-1	MADISON	712	589
		CONTRACT NO. 76A91		
		ILLINOIS FED. AID PROJECT		

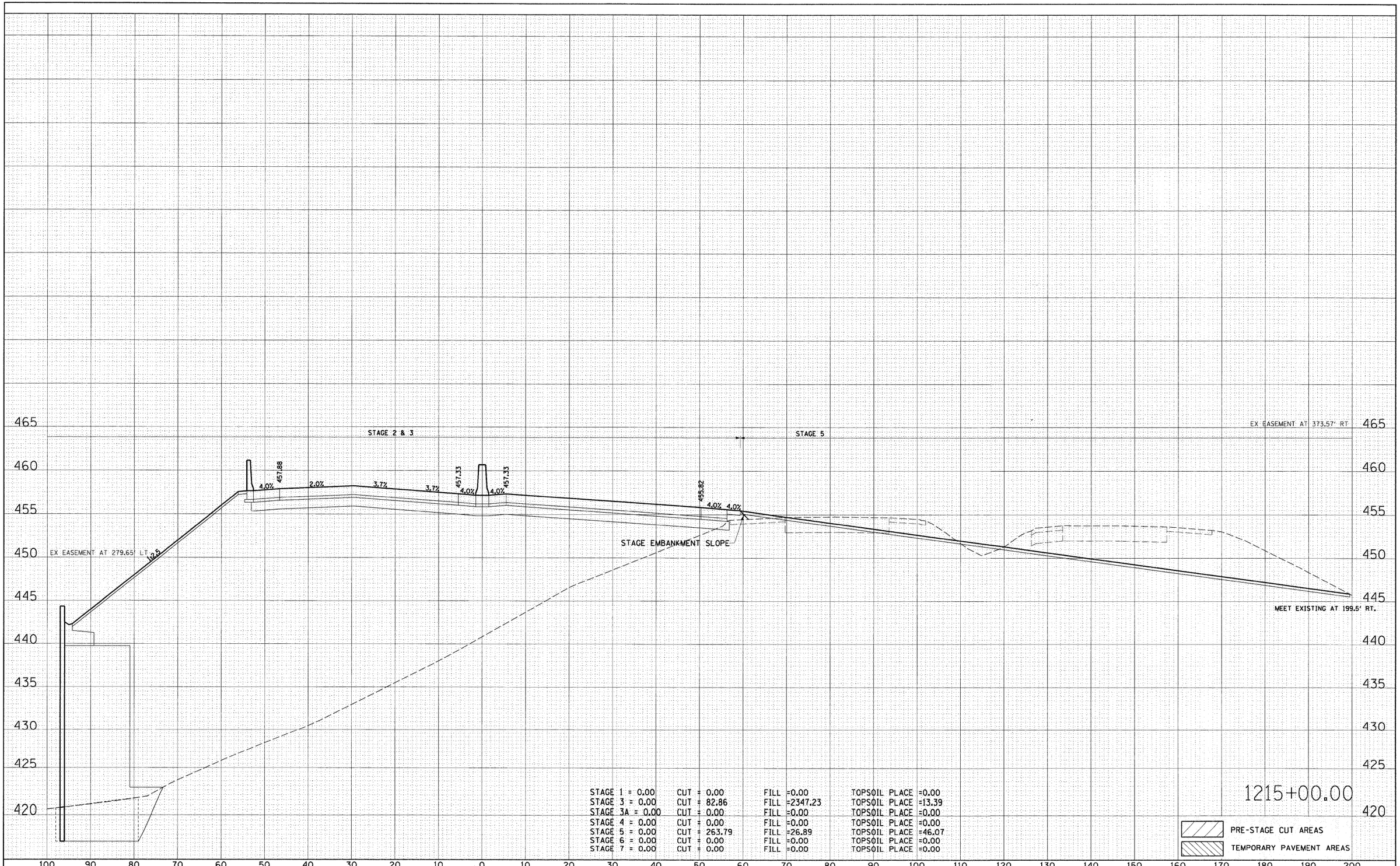

STAGE 1 = 0.00	CUT = 0.00	FILL =0.00	TOPSOIL PLACE =0.00
STAGE 3 = 0.00	CUT = 82.86	FILL =2347.23	TOPSOIL PLACE =13.39
STAGE 3A = 0.00	CUT = 0.00	FILL =0.00	TOPSOIL PLACE =0.00
STAGE 4 = 0.00	CUT = 0.00	FILL =0.00	TOPSOIL PLACE =0.00
STAGE 5 = 0.00	CUT = 263.79	FILL =26.89	TOPSOIL PLACE =46.07
STAGE 6 = 0.00	CUT = 0.00	FILL =0.00	TOPSOIL PLACE =0.00
STAGE 7 = 0.00	CUT = 0.00	FILL =0.00	TOPSOIL PLACE =0.00

FINAL SURVEY	BY	DATE
SURVEYED		
PLOTTED		
TEMPLATE		
AREAS		
AREAS CHECKED		
NOTE BOOK NO.		

ORIGINAL SURVEY	BY	DATE
SURVEYED		
PLOTTED		
TEMPLATE		
AREAS		
AREAS CHECKED		
NOTE BOOK NO.		

FILE NAME = D876D91-sht-xs-270.dgn	USER NAME = malopez	DESIGNED SJM	REVISED -
		DRAWN BAH	REVISED -
	PLOT SCALE = $SCALE$	CHECKED -	REVISED -
	PLOT DATE = 3/17/2011	DATE -	REVISED -

STATE OF ILLINOIS
DEPARTMENT OF TRANSPORTATION

CROSS SECTIONS
INTERSTATE I-270

SCALE: | SHEET NO. OF SHEETS | STA. 1215+00.00 TO STA. 1215+00.00

F.A.I. RTE.	SECTION	COUNTY	TOTAL SHEETS	SHEET NO.
270	60-1B-1	MADISON	712	590

CONTRACT NO. 76A91

ILLINOIS FED. AID PROJECT

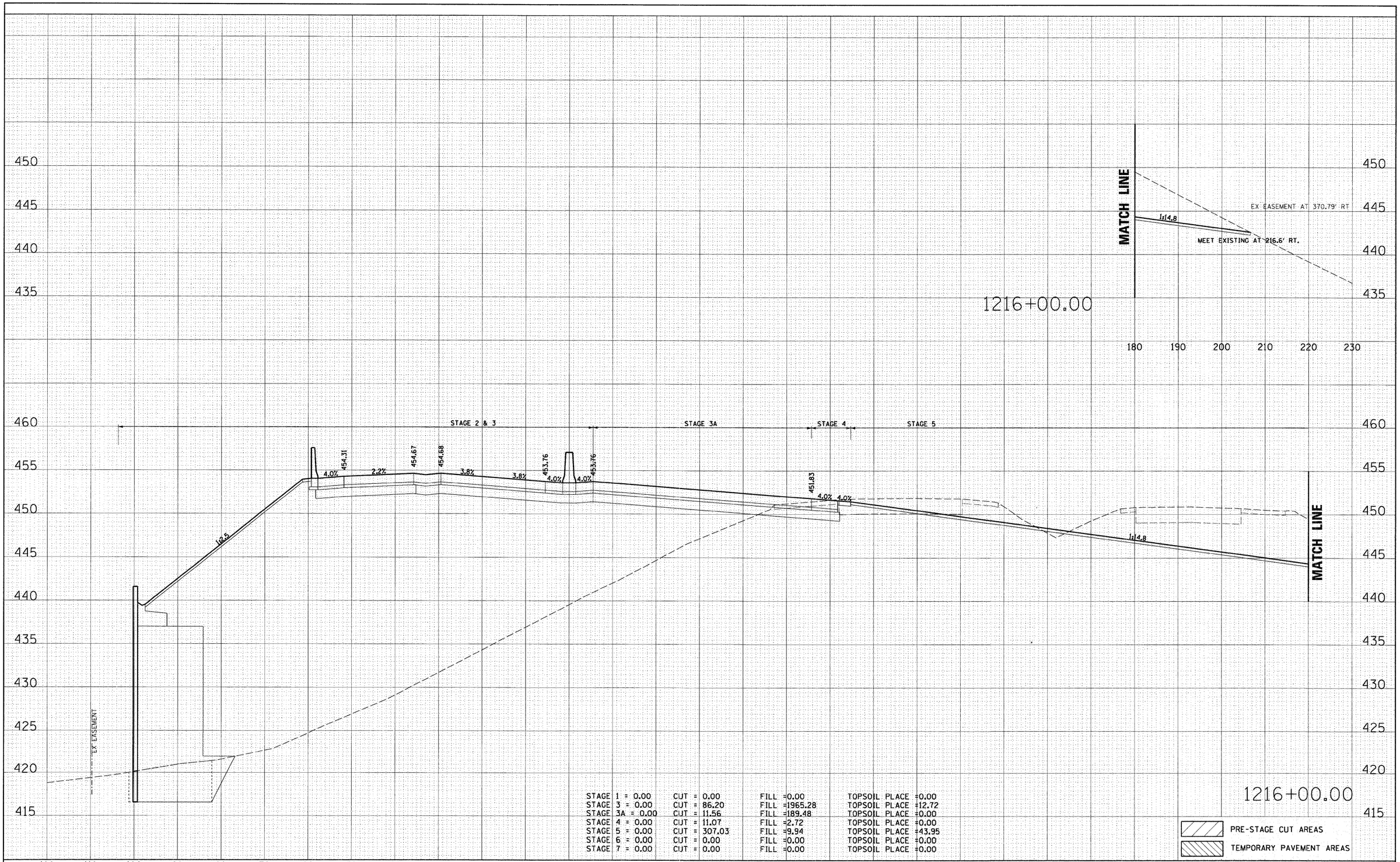

STAGE 1 = 0.00	CUT = 0.00	FILL = 0.00	TOPSOIL PLACE = 0.00
STAGE 3 = 0.00	CUT = 86.20	FILL = 1965.28	TOPSOIL PLACE = 12.72
STAGE 3A = 0.00	CUT = 11.56	FILL = 189.48	TOPSOIL PLACE = 0.00
STAGE 4 = 0.00	CUT = 11.07	FILL = 2.72	TOPSOIL PLACE = 0.00
STAGE 5 = 0.00	CUT = 307.03	FILL = 9.94	TOPSOIL PLACE = 43.95
STAGE 6 = 0.00	CUT = 0.00	FILL = 0.00	TOPSOIL PLACE = 0.00
STAGE 7 = 0.00	CUT = 0.00	FILL = 0.00	TOPSOIL PLACE = 0.00

FINAL SURVEY	BY	DATE
SURVEYED		
PLOTTED		
TEMPLATE		
AREAS		
AREAS CHECKED		
NOTE BOOK NO.		

ORIGINAL SURVEY	BY	DATE
SURVEYED		
PLOTTED		
TEMPLATE		
AREAS		
AREAS CHECKED		
NOTE BOOK NO.		

FILE NAME = D876091-sht-xs-270.dgn	USER NAME = malopez	DESIGNED SJM	REVISED -
		DRAWN BAH	REVISED -
	PLOT SCALE = $SCALE$	CHECKED -	REVISED -
	PLOT DATE = 3/17/2011	DATE -	REVISED -

STATE OF ILLINOIS
DEPARTMENT OF TRANSPORTATION

CROSS SECTIONS
INTERSTATE I-270

SCALE: | SHEET NO. OF SHEETS | STA. 1216+00.00 TO STA. 1216+00.00

F.A.I. RTE.	SECTION	COUNTY	TOTAL SHEETS	SHEET NO.
270	60-1B-1	MADISON	712	591

CONTRACT NO. 76A91

ILLINOIS FED. AID PROJECT

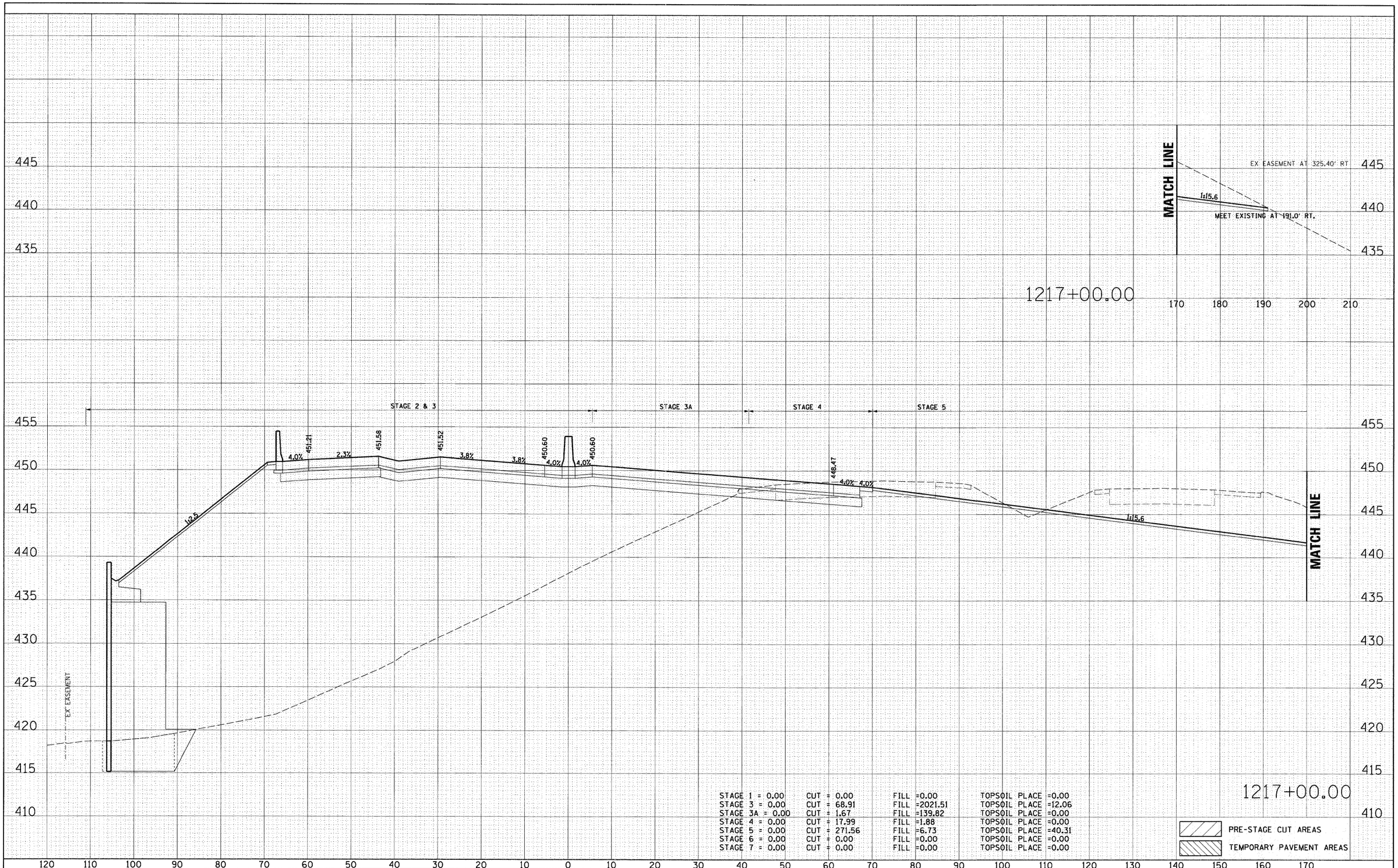

STAGE 1 = 0.00	CUT = 0.00	FILL =0.00	TOPSOIL PLACE =0.00	
STAGE 3 = 0.00	CUT = 68.91	FILL =2021.51	TOPSOIL PLACE =12.06	
STAGE 3A = 0.00	CUT = 1.67	FILL =139.82	TOPSOIL PLACE =0.00	
STAGE 4 = 0.00	CUT = 17.99	FILL =1.88	TOPSOIL PLACE =0.00	
STAGE 5 = 0.00	CUT = 271.56	FILL =6.73	TOPSOIL PLACE =40.31	
STAGE 6 = 0.00	CUT = 0.00	FILL =0.00	TOPSOIL PLACE =0.00	
STAGE 7 = 0.00	CUT = 0.00	FILL =0.00	TOPSOIL PLACE =0.00	

FINAL SURVEY	BY	DATE
SURVEYED		
PLOTTED		
TEMPLATE		
AREAS		
AREAS CHECKED		
NOTE BOOK		
NO.		

ORIGINAL SURVEY	BY	DATE
SURVEYED		
PLOTTED		
TEMPLATE		
AREAS		
AREAS CHECKED		
NOTE BOOK		
NO.		

FILE NAME = D876091-sht-xs-270.dgn	USER NAME = malopez	DESIGNED SJM	REVISED -
		DRAWN BAH	REVISED -
	PLOT SCALE = $SCALE$	CHECKED -	REVISED -
	PLOT DATE = 3/17/2011	DATE -	REVISED -

STATE OF ILLINOIS
DEPARTMENT OF TRANSPORTATION

CROSS SECTIONS
INTERSTATE I-270

SCALE: | SHEET NO. OF SHEETS | STA. 1217+00.00 TO STA. 1217+00.00

F.A.I. RTE.	SECTION	COUNTY	TOTAL SHEETS	SHEET NO.
270	60-1B-1	MADISON	712	592

CONTRACT NO. 76A91

ILLINOIS FED. AID PROJECT

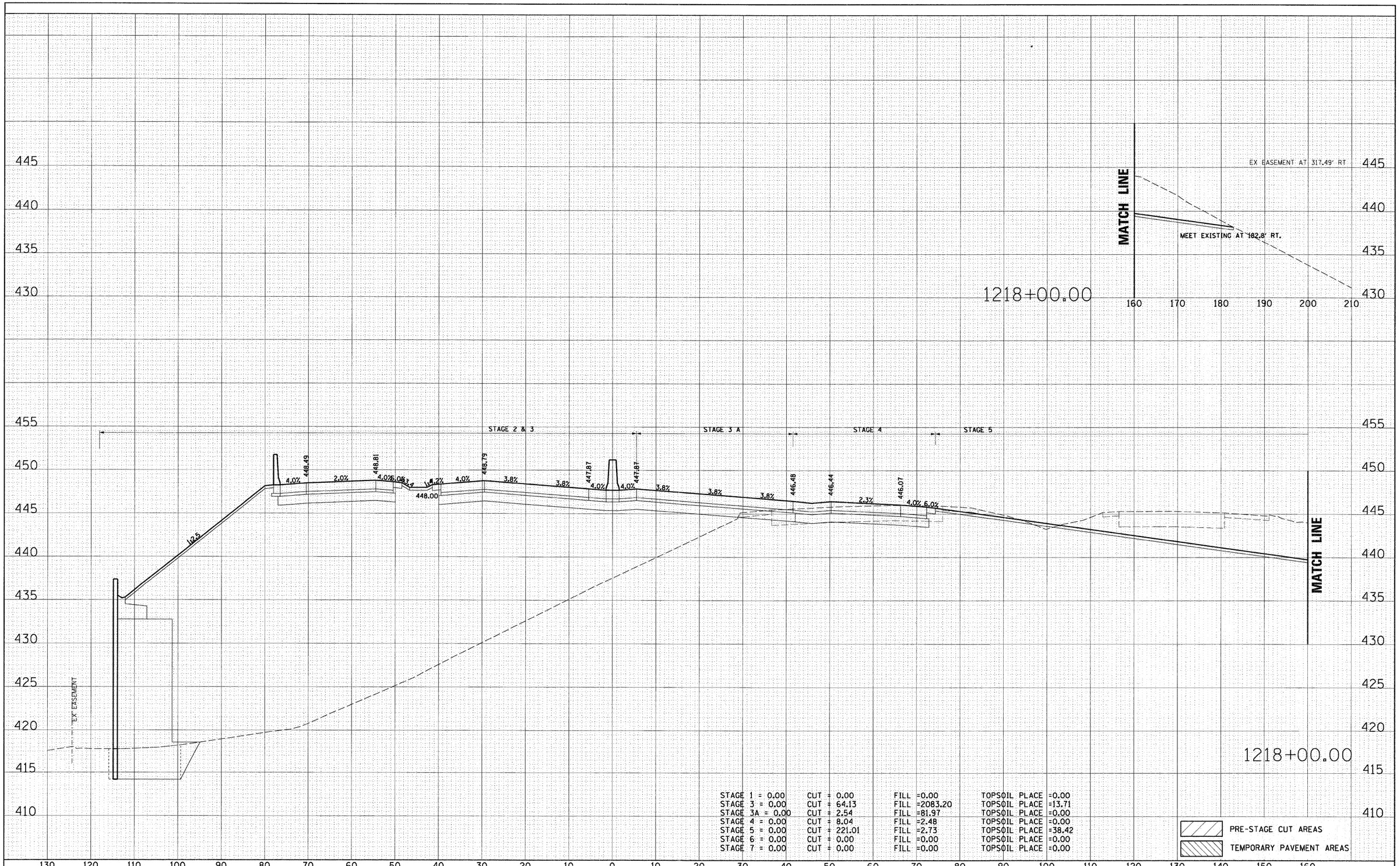

STAGE 1 = 0.00	CUT = 0.00	FILL =0.00	TOPSOIL PLACE =0.00
STAGE 3 = 0.00	CUT = 64.13	FILL =2083.20	TOPSOIL PLACE =13.71
STAGE 3A = 0.00	CUT = 2.54	FILL =81.97	TOPSOIL PLACE =0.00
STAGE 4 = 0.00	CUT = 8.04	FILL =2.48	TOPSOIL PLACE =0.00
STAGE 5 = 0.00	CUT = 221.01	FILL =2.73	TOPSOIL PLACE =38.42
STAGE 6 = 0.00	CUT = 0.00	FILL =0.00	TOPSOIL PLACE =0.00
STAGE 7 = 0.00	CUT = 0.00	FILL =0.00	TOPSOIL PLACE =0.00

FINAL SURVEY	BY	DATE
SURVEYED		
PLOTTED		
TEMPLATE		
AREAS		
AREAS CHECKED		
NOTE BOOK NO.		

ORIGINAL SURVEY	BY	DATE
SURVEYED		
PLOTTED		
TEMPLATE		
AREAS		
AREAS CHECKED		
NOTE BOOK NO.		

FILE NAME = D876091-sht-xs-270.dgn	USER NAME = malopez	DESIGNED SJM	REVISED -
		DRAWN BAH	REVISED -
	PLOT SCALE = $SCALE$	CHECKED -	REVISED -
	PLOT DATE = 3/17/2011	DATE -	REVISED -

STATE OF ILLINOIS
DEPARTMENT OF TRANSPORTATION

CROSS SECTIONS
INTERSTATE I-270

SCALE: | SHEET NO. OF SHEETS | STA. 1218+00.00 TO STA. 1218+00.00

F.A.I. RTE.	SECTION	COUNTY	TOTAL SHEETS	SHEET NO.
270	60-1B-1	MADISON	712	593
		CONTRACT NO. 76A91		

ILLINOIS FED. AID PROJECT

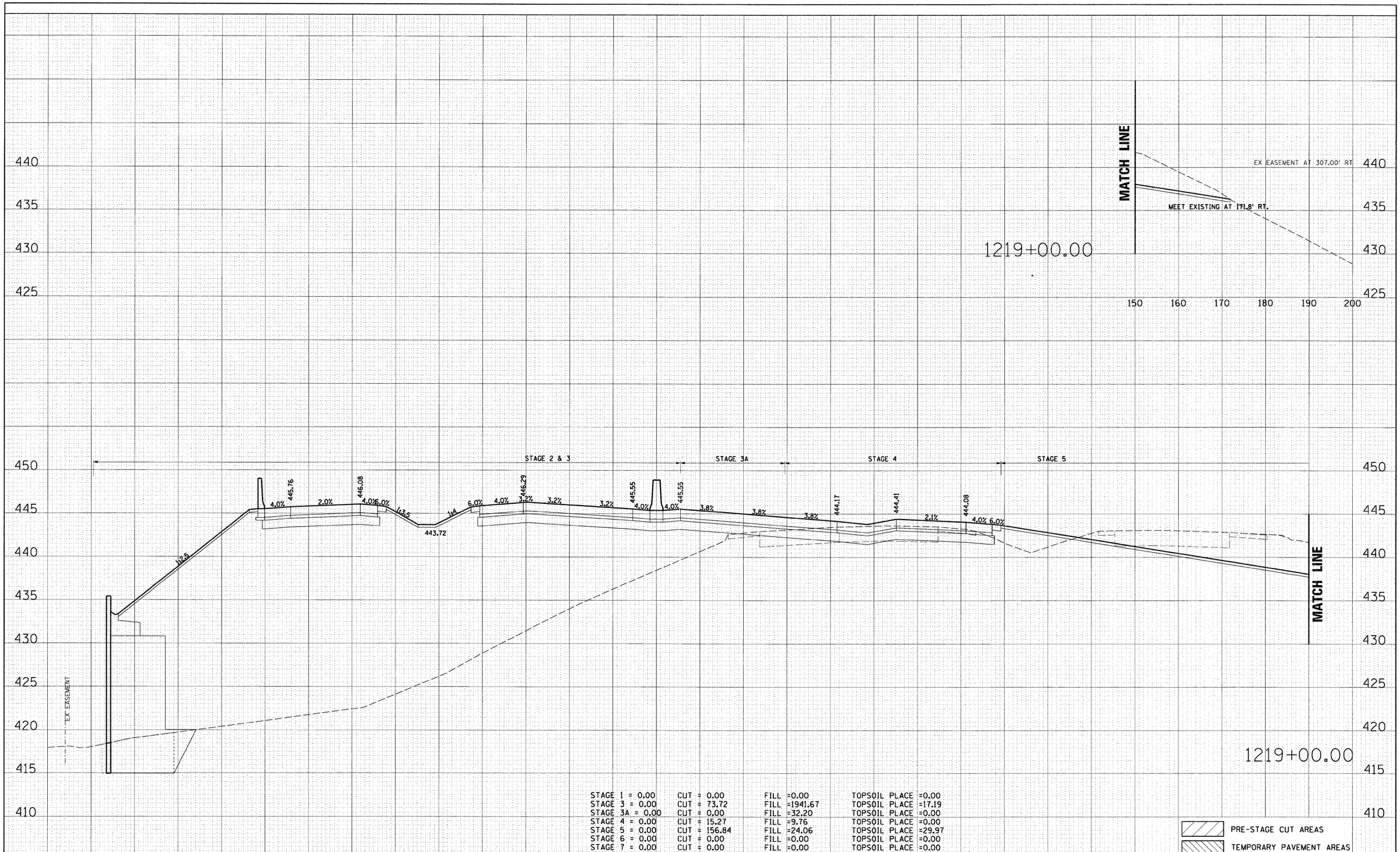

STAGE 1 = 0.00	CUT = 0.00	FILL =0.00	TOPSOIL PLACE =0.00		
STAGE 3 = 0.00	CUT = 73.72	FILL =1941.67	TOPSOIL PLACE =17.19		
STAGE 3A = 0.00	CUT = 0.00	FILL =32.20	TOPSOIL PLACE =0.00		
STAGE 4 = 0.00	CUT = 15.27	FILL =9.76	TOPSOIL PLACE =0.00		
STAGE 5 = 0.00	CUT = 156.84	FILL =24.06	TOPSOIL PLACE =29.97		
STAGE 6 = 0.00	CUT = 0.00	FILL =0.00	TOPSOIL PLACE =0.00		
STAGE 7 = 0.00	CUT = 0.00	FILL =0.00	TOPSOIL PLACE =0.00		

FINAL SURVEY	BY	DATE
SURVEYED		
PLOTTED		
TEMPLATE		
AREAS		
AREAS CHECKED		
NOTE BOOK NO.		

ORIGINAL SURVEY	BY	DATE
SURVEYED		
PLOTTED		
TEMPLATE		
AREAS		
AREAS CHECKED		
NOTE BOOK NO.		

FILE NAME = D876D91-sht-xs-270.dgn	USER NAME = malopez	DESIGNED SJM	REVISED -
		DRAWN BAH	REVISED -
	PLOT SCALE = $SCALE$	CHECKED -	REVISED -
	PLOT DATE = 3/17/2011	DATE -	REVISED -

STATE OF ILLINOIS
DEPARTMENT OF TRANSPORTATION

CROSS SECTIONS
INTERSTATE I-270

SCALE: | SHEET NO. OF SHEETS | STA. 1219+00.00 TO STA. 1219+00.00

F.A.I. RTE.	SECTION	COUNTY	TOTAL SHEETS	SHEET NO.
270	60-1B-1	MADISON	712	594

CONTRACT NO. 76A91

ILLINOIS FED. AID PROJECT

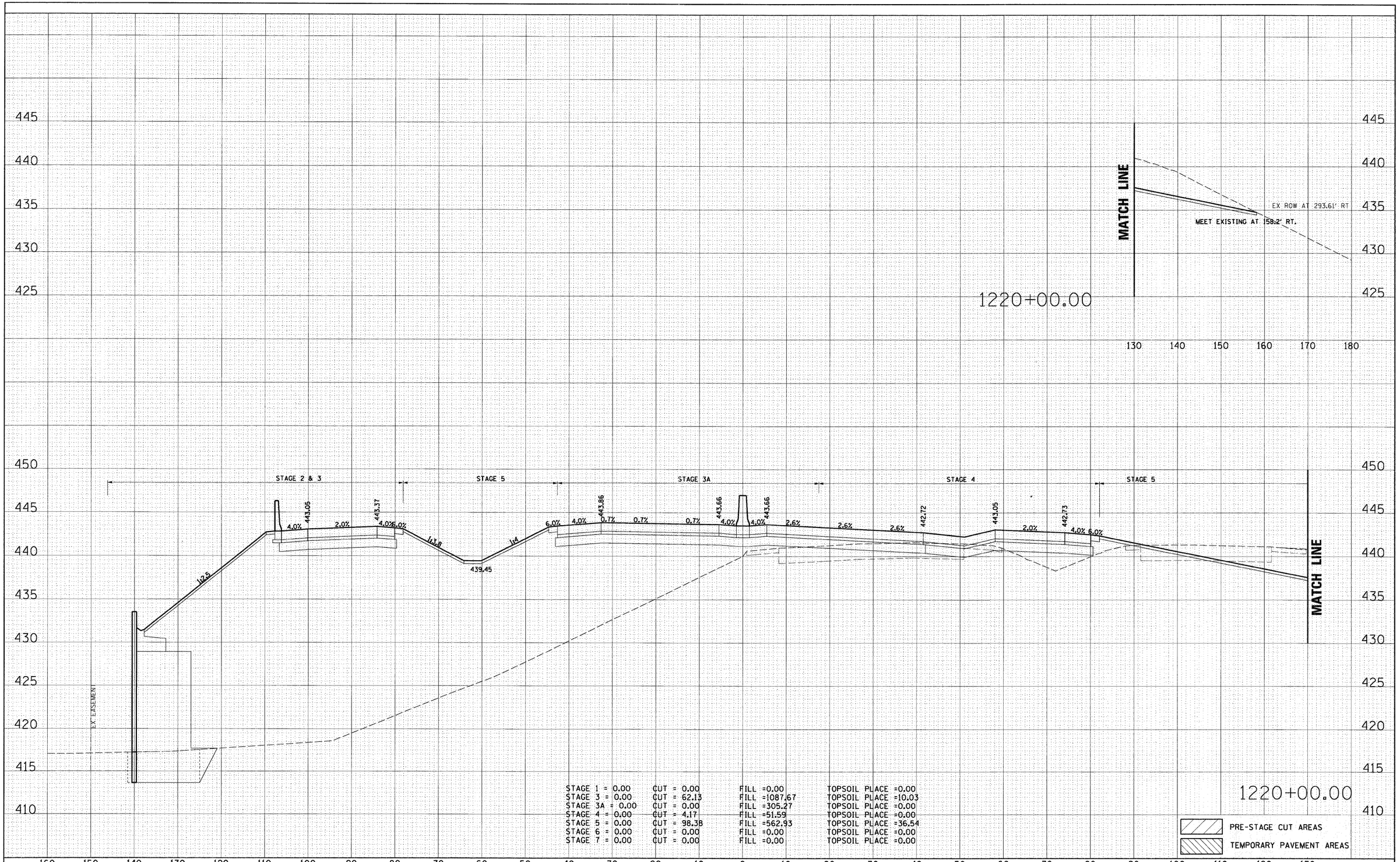

STAGE 1 = 0.00	CUT = 0.00	FILL =0.00	TOPSOIL PLACE =0.00
STAGE 3 = 0.00	CUT = 62.13	FILL =1087.67	TOPSOIL PLACE =10.03
STAGE 3A = 0.00	CUT = 0.00	FILL =305.27	TOPSOIL PLACE =0.00
STAGE 4 = 0.00	CUT = 4.17	FILL =51.59	TOPSOIL PLACE =0.00
STAGE 5 = 0.00	CUT = 98.38	FILL =562.93	TOPSOIL PLACE =36.54
STAGE 6 = 0.00	CUT = 0.00	FILL =0.00	TOPSOIL PLACE =0.00
STAGE 7 = 0.00	CUT = 0.00	FILL =0.00	TOPSOIL PLACE =0.00

FILE NAME = D876D91-sht-xs-270.dgn	USER NAME = malopez	DESIGNED SJM	REVISED -
		DRAWN BAH	REVISED -
	PLOT SCALE = $SCALE$	CHECKED -	REVISED -
	PLOT DATE = 3/17/2011	DATE -	REVISED -

STATE OF ILLINOIS
DEPARTMENT OF TRANSPORTATION

CROSS SECTIONS
INTERSTATE I-270

SCALE: | SHEET NO. OF SHEETS | STA. 1220+00.00 TO STA. 1220+00.00

F.A.I. RTE.	SECTION	COUNTY	TOTAL SHEETS	SHEET NO.
270	60-1B-1	MADISON	712	595

CONTRACT NO. 76A91

ILLINOIS FED. AID PROJECT

FINAL SURVEY — NOTE BOOK NO. — SURVEYED / PLOTTED / TEMPLATE / AREAS / AREAS CHECKED — BY — DATE

ORIGINAL SURVEY — NOTE BOOK NO. — SURVEYED / PLOTTED / TEMPLATE / AREAS / AREAS CHECKED — BY — DATE

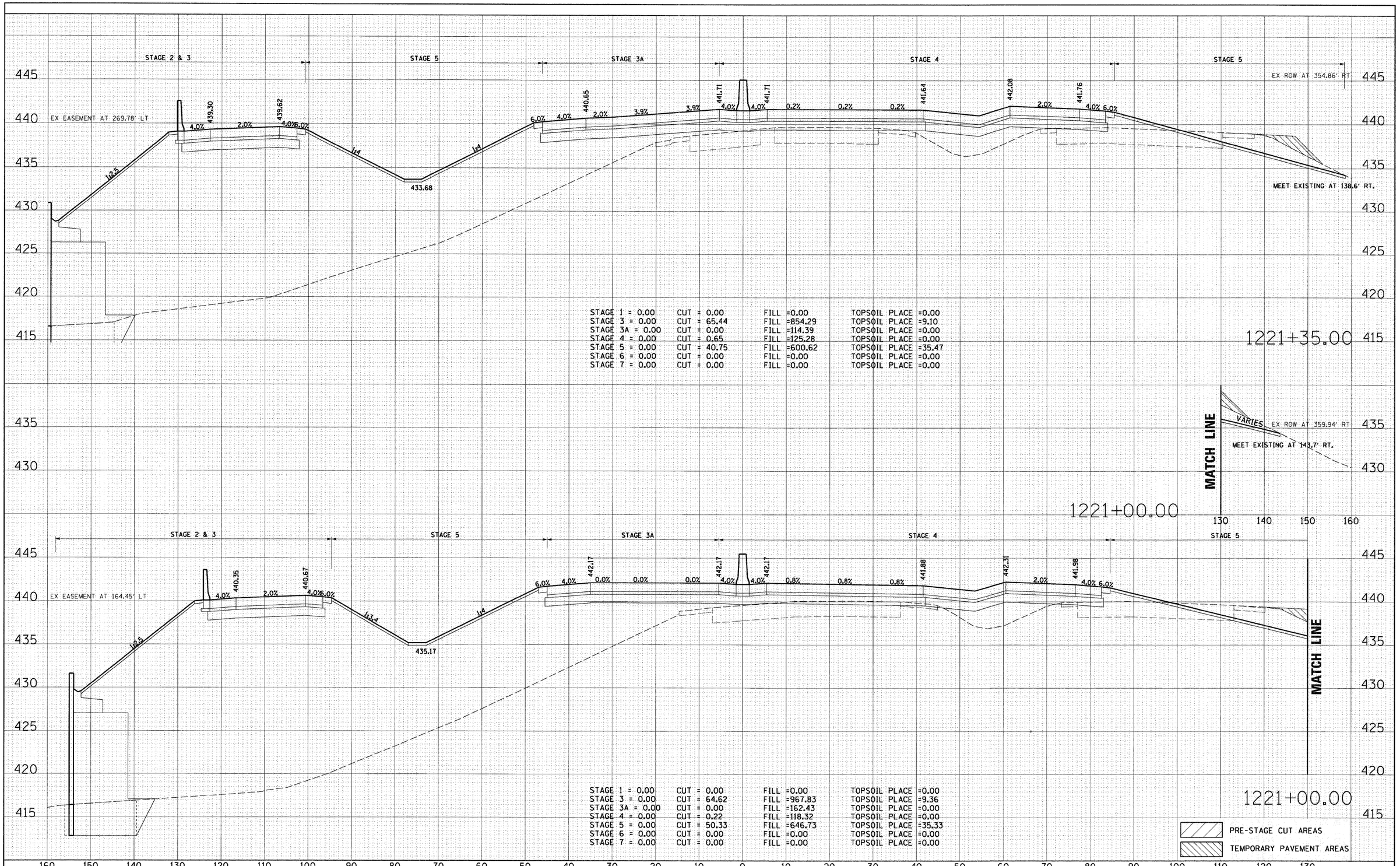

FILE NAME = D876D91-sht-xs-270.dgn	USER NAME = malopez	DESIGNED SJM	REVISED -
		DRAWN BAH	REVISED -
	PLOT SCALE = $SCALE$	CHECKED -	REVISED -
	PLOT DATE = 3/17/2011	DATE -	REVISED -

STATE OF ILLINOIS
DEPARTMENT OF TRANSPORTATION

CROSS SECTIONS
INTERSTATE I-270

SCALE: | SHEET NO. OF SHEETS | STA. 1221+00.00 TO STA. 1221+35.00

F.A.I. RTE.	SECTION	COUNTY	TOTAL SHEETS	SHEET NO.
270	60-1B-1	MADISON	712	596

CONTRACT NO. 76A91

ILLINOIS FED. AID PROJECT

FINAL SURVEY	DATE	BY
SURVEYED		
PLOTTED		
TEMPLATE		
AREAS		
AREAS CHECKED		
NOTE BOOK NO.		

ORIGINAL SURVEY	DATE	BY
SURVEYED		
PLOTTED		
TEMPLATE		
AREAS		
AREAS CHECKED		
NOTE BOOK NO.		

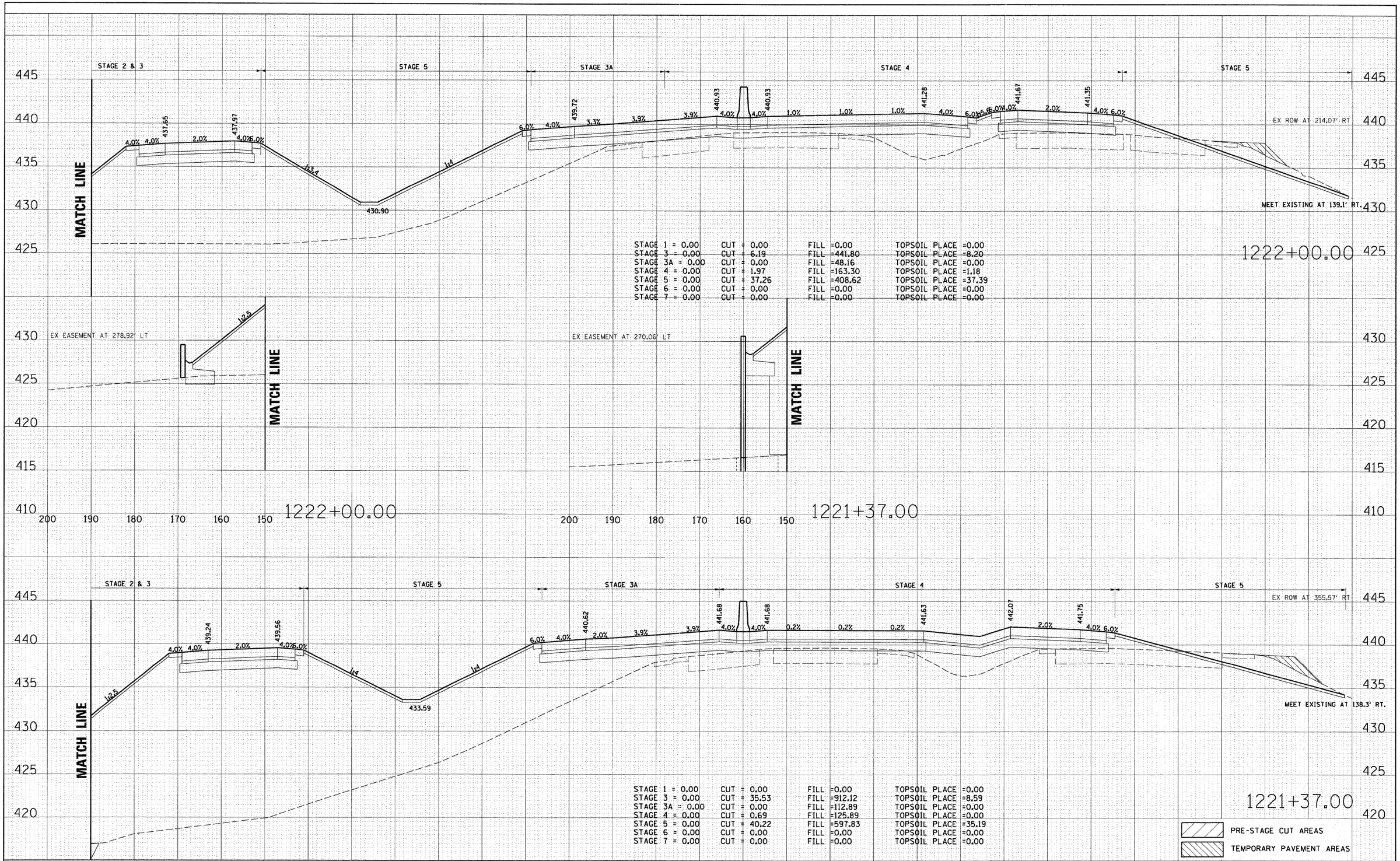

	CUT	FILL	TOPSOIL PLACE
STAGE 1 = 0.00	CUT = 0.00	FILL =0.00	TOPSOIL PLACE =0.00
STAGE 3 = 0.00	CUT = 6.19	FILL =441.80	TOPSOIL PLACE =8.20
STAGE 3A = 0.00	CUT = 0.00	FILL =48.16	TOPSOIL PLACE =0.00
STAGE 4 = 0.00	CUT = 1.97	FILL =163.30	TOPSOIL PLACE =1.18
STAGE 5 = 0.00	CUT = 37.26	FILL =408.62	TOPSOIL PLACE =37.39
STAGE 6 = 0.00	CUT = 0.00	FILL =0.00	TOPSOIL PLACE =0.00
STAGE 7 = 0.00	CUT = 0.00	FILL =0.00	TOPSOIL PLACE =0.00

	CUT	FILL	TOPSOIL PLACE
STAGE 1 = 0.00	CUT = 0.00	FILL =0.00	TOPSOIL PLACE =0.00
STAGE 3 = 0.00	CUT = 35.53	FILL =912.12	TOPSOIL PLACE =8.59
STAGE 3A = 0.00	CUT = 0.00	FILL =112.89	TOPSOIL PLACE =0.00
STAGE 4 = 0.00	CUT = 0.69	FILL =125.89	TOPSOIL PLACE =0.00
STAGE 5 = 0.00	CUT = 40.22	FILL =597.83	TOPSOIL PLACE =35.19
STAGE 6 = 0.00	CUT = 0.00	FILL =0.00	TOPSOIL PLACE =0.00
STAGE 7 = 0.00	CUT = 0.00	FILL =0.00	TOPSOIL PLACE =0.00

FINAL SURVEY	BY	DATE
SURVEYED		
PLOTTED		
TEMPLATE		
AREAS		
AREAS CHECKED		
NOTE BOOK NO.		

ORIGINAL SURVEY	BY	DATE
SURVEYED		
PLOTTED		
TEMPLATE		
AREAS		
AREAS CHECKED		
NOTE BOOK NO.		

FILE NAME = D876D91-sht-xs-270.dgn	USER NAME = malopez	DESIGNED SJM	REVISED -
		DRAWN BAH	REVISED -
	PLOT SCALE = $SCALE$	CHECKED -	REVISED -
	PLOT DATE = 3/17/2011	DATE -	REVISED -

STATE OF ILLINOIS
DEPARTMENT OF TRANSPORTATION

CROSS SECTIONS
INTERSTATE I-270

SCALE: | SHEET NO. OF SHEETS | STA. 1221+37.00 TO STA. 1222+00.00

F.A.I. RTE.	SECTION	COUNTY	TOTAL SHEETS	SHEET NO.
270	60-1B-1	MADISON	712	597

CONTRACT NO. 76A91

ILLINOIS FED. AID PROJECT

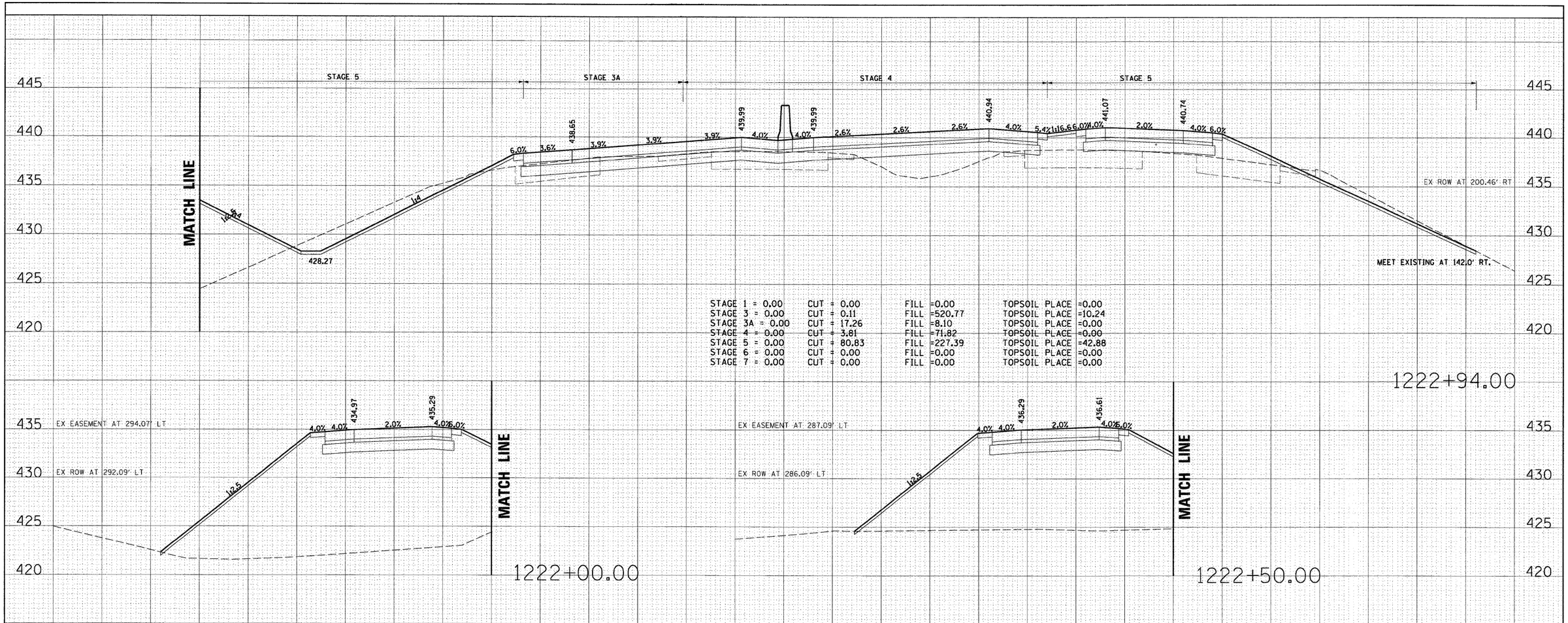

STAGE 1 = 0.00	CUT = 0.00	FILL =0.00	TOPSOIL PLACE =0.00
STAGE 3 = 0.00	CUT = 0.11	FILL =520.77	TOPSOIL PLACE =10.24
STAGE 3A = 0.00	CUT = 17.26	FILL =8.10	TOPSOIL PLACE =0.00
STAGE 4 = 0.00	CUT = 3.81	FILL =71.82	TOPSOIL PLACE =0.00
STAGE 5 = 0.00	CUT = 80.83	FILL =227.39	TOPSOIL PLACE =42.88
STAGE 6 = 0.00	CUT = 0.00	FILL =0.00	TOPSOIL PLACE =0.00
STAGE 7 = 0.00	CUT = 0.00	FILL =0.00	TOPSOIL PLACE =0.00

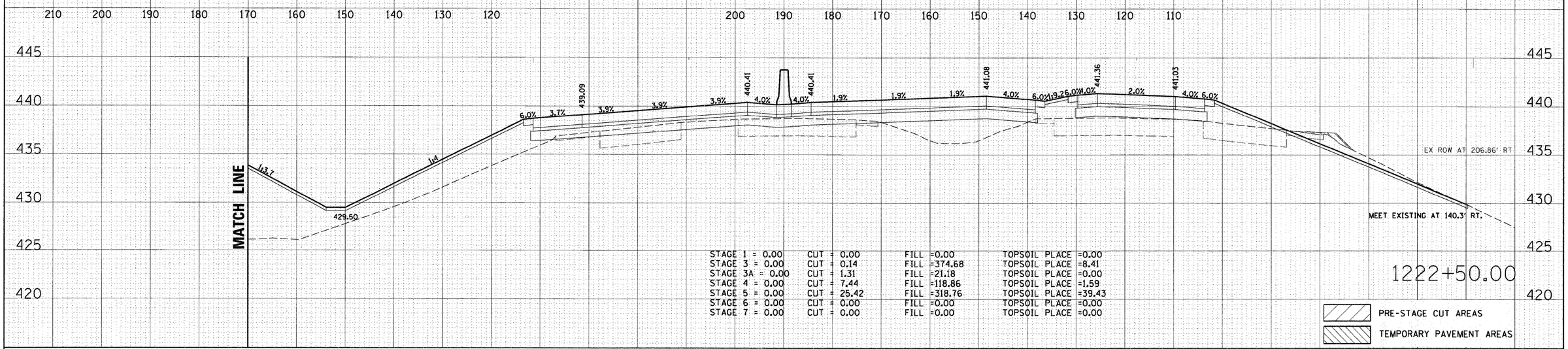

STAGE 1 = 0.00	CUT = 0.00	FILL =0.00	TOPSOIL PLACE =0.00
STAGE 3 = 0.00	CUT = 0.14	FILL =374.68	TOPSOIL PLACE =8.41
STAGE 3A = 0.00	CUT = 1.31	FILL =21.18	TOPSOIL PLACE =0.00
STAGE 4 = 0.00	CUT = 7.44	FILL =118.86	TOPSOIL PLACE =1.59
STAGE 5 = 0.00	CUT = 25.42	FILL =318.76	TOPSOIL PLACE =39.43
STAGE 6 = 0.00	CUT = 0.00	FILL =0.00	TOPSOIL PLACE =0.00
STAGE 7 = 0.00	CUT = 0.00	FILL =0.00	TOPSOIL PLACE =0.00

PRE-STAGE CUT AREAS

TEMPORARY PAVEMENT AREAS

FINAL SURVEY — NOTE BOOK NO. — SURVEYED / PLOTTED / TEMPLATE / AREAS / AREAS CHECKED — BY — DATE

ORIGINAL SURVEY — NOTE BOOK NO. — SURVEYED / PLOTTED / TEMPLATE / AREAS / AREAS CHECKED — BY — DATE

FILE NAME = D876D91-sht-xs-270.dgn	USER NAME = malopez	DESIGNED SJM	REVISED -
		DRAWN BAH	REVISED -
	PLOT SCALE = $SCALE$	CHECKED -	REVISED -
	PLOT DATE = 3/17/2011	DATE -	REVISED -

STATE OF ILLINOIS
DEPARTMENT OF TRANSPORTATION

CROSS SECTIONS
INTERSTATE I-270

SCALE: | SHEET NO. OF SHEETS | STA. 1222+50.00 TO STA. 1222+94.00

F.A.I. RTE.	SECTION	COUNTY	TOTAL SHEETS	SHEET NO.
270	60-1B-1	MADISON	712	598
		CONTRACT NO. 76A91		

ILLINOIS FED. AID PROJECT

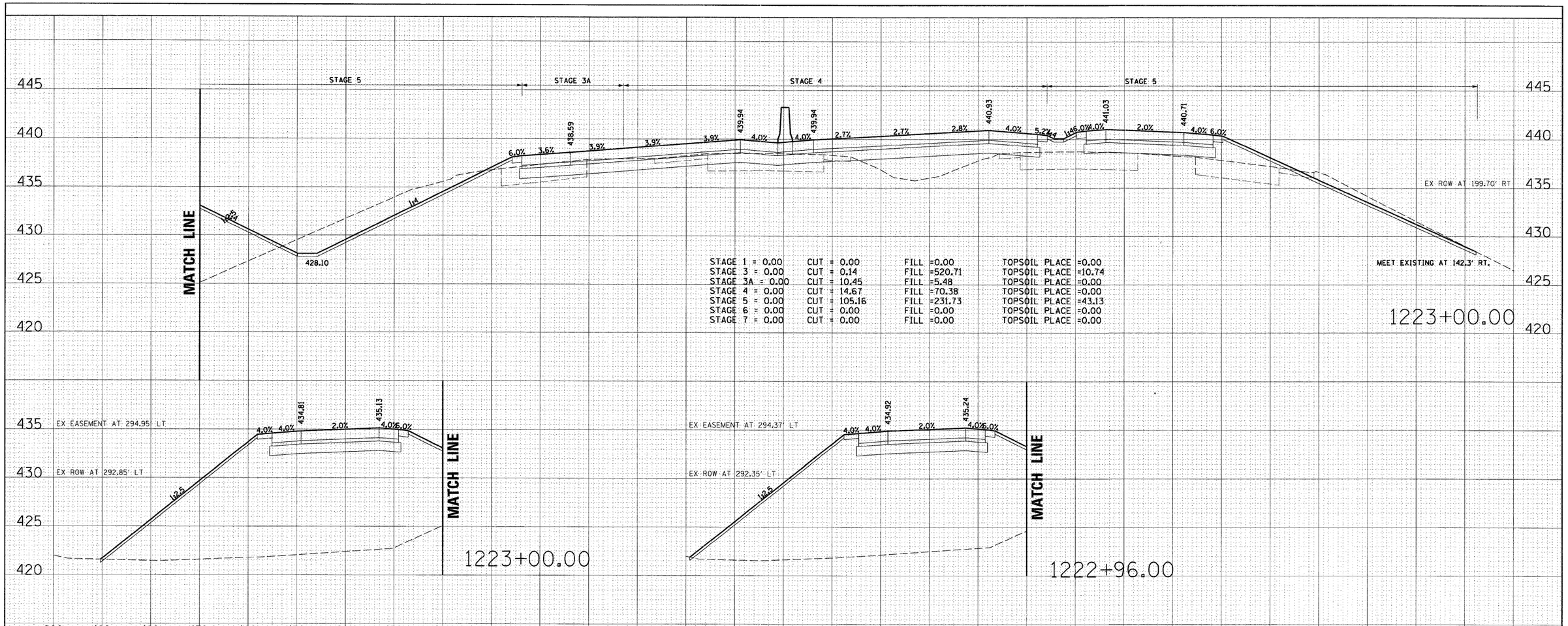

STAGE 1 = 0.00	CUT = 0.00	FILL =0.00	TOPSOIL PLACE =0.00	
STAGE 3 = 0.00	CUT = 0.14	FILL =520.71	TOPSOIL PLACE =10.74	
STAGE 3A = 0.00	CUT = 10.45	FILL =5.48	TOPSOIL PLACE =0.00	
STAGE 4 = 0.00	CUT = 14.67	FILL =70.38	TOPSOIL PLACE =0.00	
STAGE 5 = 0.00	CUT = 105.16	FILL =231.73	TOPSOIL PLACE =43.13	
STAGE 6 = 0.00	CUT = 0.00	FILL =0.00	TOPSOIL PLACE =0.00	
STAGE 7 = 0.00	CUT = 0.00	FILL =0.00	TOPSOIL PLACE =0.00	

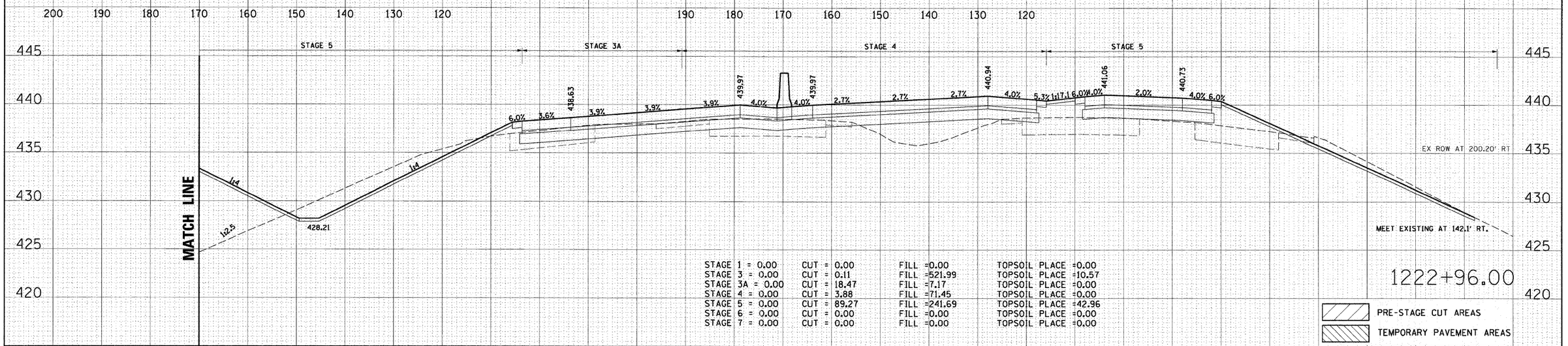

STAGE 1 = 0.00	CUT = 0.00	FILL =0.00	TOPSOIL PLACE =0.00	
STAGE 3 = 0.00	CUT = 0.11	FILL =521.99	TOPSOIL PLACE =10.57	
STAGE 3A = 0.00	CUT = 18.47	FILL =7.17	TOPSOIL PLACE =0.00	
STAGE 4 = 0.00	CUT = 3.88	FILL =71.45	TOPSOIL PLACE =0.00	
STAGE 5 = 0.00	CUT = 89.27	FILL =241.69	TOPSOIL PLACE =42.96	
STAGE 6 = 0.00	CUT = 0.00	FILL =0.00	TOPSOIL PLACE =0.00	
STAGE 7 = 0.00	CUT = 0.00	FILL =0.00	TOPSOIL PLACE =0.00	

PRE-STAGE CUT AREAS

TEMPORARY PAVEMENT AREAS

FILE NAME = D876D91-sht-xs-270.dgn	USER NAME = malopez	DESIGNED SJM	REVISED -	STATE OF ILLINOIS DEPARTMENT OF TRANSPORTATION
		DRAWN BAH	REVISED -	
	PLOT SCALE = $SCALE$	CHECKED -	REVISED -	
	PLOT DATE = 3/17/2011	DATE -	REVISED -	

CROSS SECTIONS
INTERSTATE I-270

SCALE: | SHEET NO. OF SHEETS | STA. 1222+96.00 TO STA. 1223+00.00

F.A.I. RTE.	SECTION	COUNTY	TOTAL SHEETS	SHEET NO.
270	60-1B-1	MADISON	712	599

CONTRACT NO. 76A91

ILLINOIS FED. AID PROJECT

FINAL SURVEY: SURVEYED / PLOTTED / TEMPLATE / AREAS / AREAS CHECKED — NOTE BOOK NO. — BY — DATE

ORIGINAL SURVEY: SURVEYED / PLOTTED / TEMPLATE / AREAS / AREAS CHECKED — NOTE BOOK NO. — BY — DATE

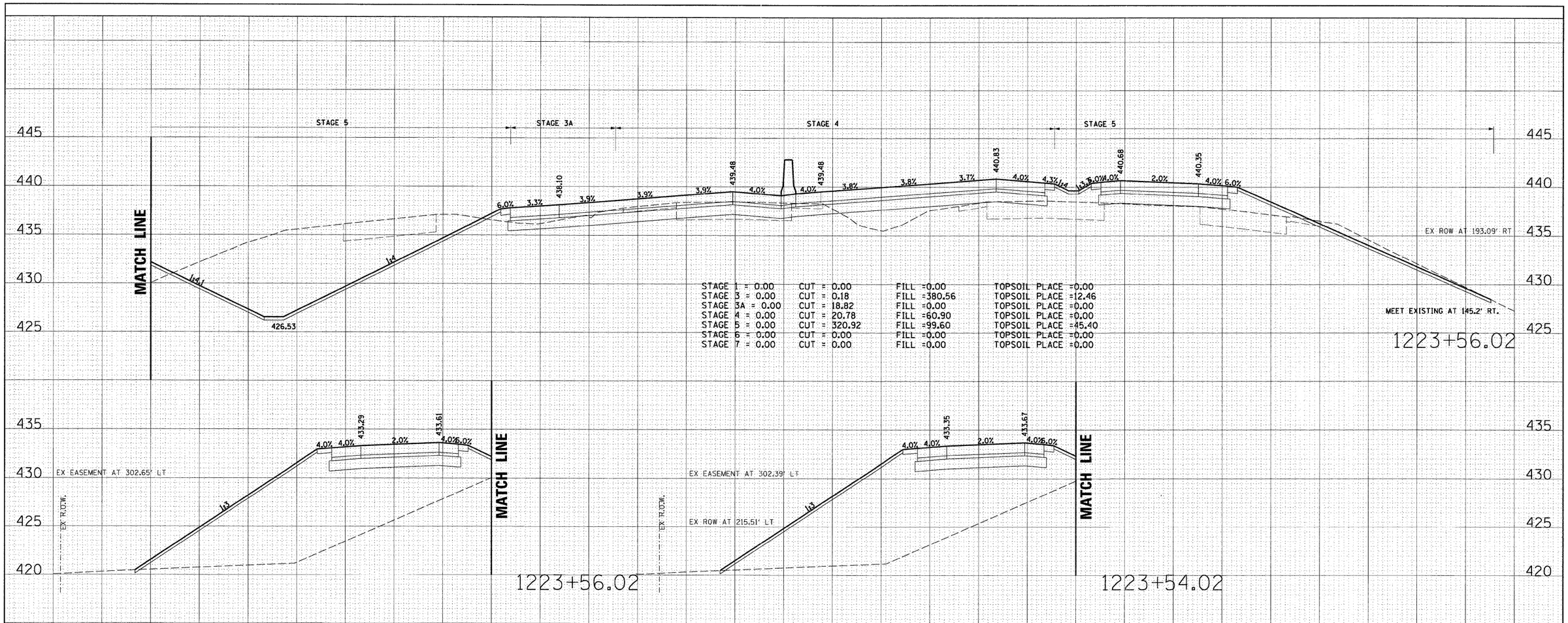

STAGE 1 = 0.00	CUT = 0.00	FILL =0.00	TOPSOIL PLACE =0.00
STAGE 3 = 0.00	CUT = 0.18	FILL =380.56	TOPSOIL PLACE =12.46
STAGE 3A = 0.00	CUT = 18.82	FILL =0.00	TOPSOIL PLACE =0.00
STAGE 4 = 0.00	CUT = 20.78	FILL =60.90	TOPSOIL PLACE =0.00
STAGE 5 = 0.00	CUT = 320.92	FILL =99.60	TOPSOIL PLACE =45.40
STAGE 6 = 0.00	CUT = 0.00	FILL =0.00	TOPSOIL PLACE =0.00
STAGE 7 = 0.00	CUT = 0.00	FILL =0.00	TOPSOIL PLACE =0.00

STAGE 1 = 0.00	CUT = 0.00	FILL =0.00	TOPSOIL PLACE =0.00
STAGE 3 = 0.00	CUT = 114.01	FILL =411.42	TOPSOIL PLACE =23.19
STAGE 3A = 0.00	CUT = 19.26	FILL =0.00	TOPSOIL PLACE =0.00
STAGE 4 = 0.00	CUT = 20.57	FILL =60.96	TOPSOIL PLACE =0.00
STAGE 5 = 0.00	CUT = 197.97	FILL =82.10	TOPSOIL PLACE =34.63
STAGE 6 = 0.00	CUT = 0.00	FILL =0.00	TOPSOIL PLACE =0.00
STAGE 7 = 0.00	CUT = 0.00	FILL =0.00	TOPSOIL PLACE =0.00

PRE-STAGE CUT AREAS

TEMPORARY PAVEMENT AREAS

FINAL SURVEY	BY	DATE
SURVEYED		
PLOTTED		
TEMPLATE		
AREAS		
AREAS CHECKED		
NOTE BOOK NO.		

ORIGINAL SURVEY	BY	DATE
SURVEYED		
PLOTTED		
TEMPLATE		
AREAS		
AREAS CHECKED		
NOTE BOOK NO.		

FILE NAME = D876091-sht-xs-270.dgn	USER NAME = malopez	DESIGNED SJM	REVISED -
		DRAWN BAH	REVISED -
	PLOT SCALE = $SCALE$	CHECKED -	REVISED -
	PLOT DATE = 3/17/2011	DATE -	REVISED -

STATE OF ILLINOIS
DEPARTMENT OF TRANSPORTATION

CROSS SECTIONS
INTERSTATE I-270

SCALE: | SHEET NO. OF SHEETS | STA. 1223+54.02 TO STA. 1223+56.02

F.A.I. RTE.	SECTION	COUNTY	TOTAL SHEETS	SHEET NO.
270	60-1B-1	MADISON	712	600
		CONTRACT NO. 76A91		
		ILLINOIS FED. AID PROJECT		