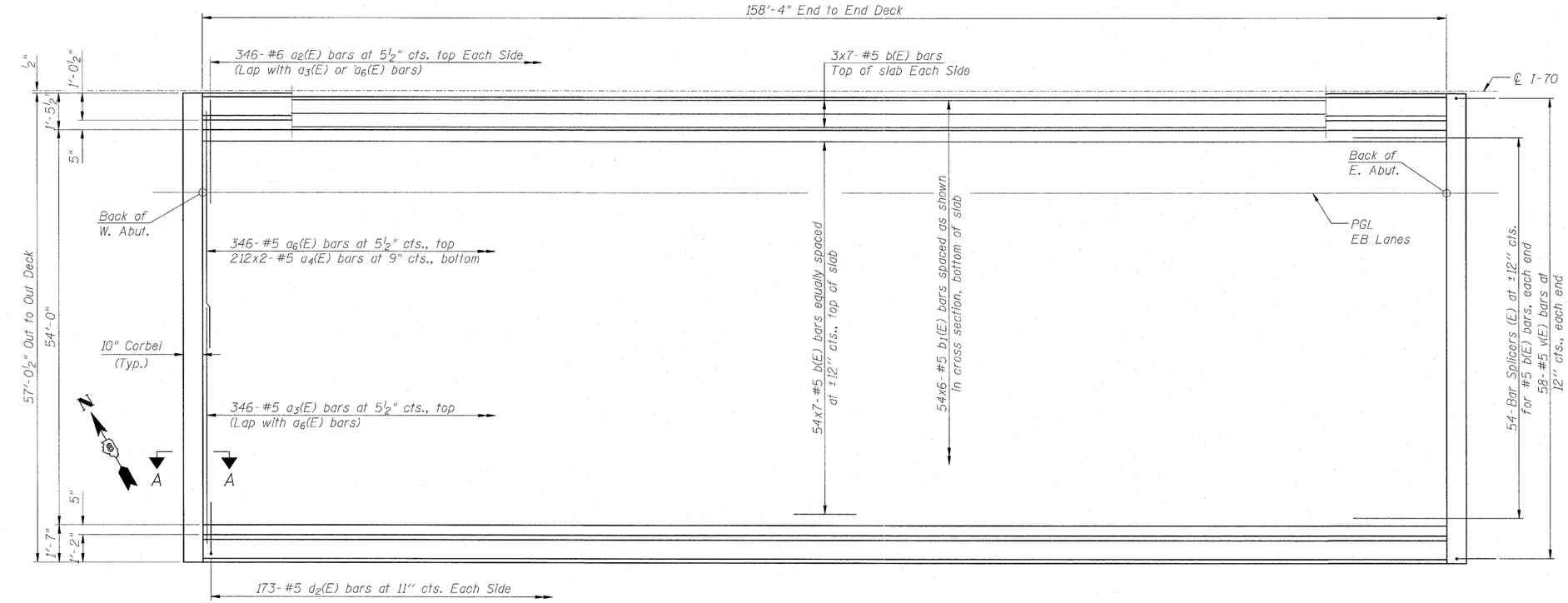

PLAN

EASTBOUND SUPERSTRUCTURE BILL OF MATERIAL

Bar	No.	Size	Length	Shape
$a_2(E)$	692	#6	6'-0"	
$a_3(E)$	346	#5	25'-5"	
$a_4(E)$	424	#5	28'-5"	
$a_6(E)$	346	#5	33'-5"	
b(E)	420	#5	24'-5"	
$b_1(E)$	324	#5	28'-2"	
d(E)	346	#5	6'-10"	
$d_2(E)$	346	#5	8'-4"	
e(E)	112	#4	19'-5"	
$e_1(E)$	12	#8	29'-2"	
$e_2(E)$	12	#4	27'-5"	
m(E)	8	#6	29'-9"	
$m_1(E)$	12	#6	29'-9"	
$m_2(E)$	28	#6	10'-5"	
$m_3(E)$	12	#6	8'-0"	
$m_5(E)$	4	#6	3'-3"	
s(E)	108	#5	6'-11"	
$s_1(E)$	96	#4	16'-2"	
v(E)	116	#5	3'-4"	
Reinforcement Bars, Epoxy Coated			Pound	72,050
Concrete Superstructure			Cu. Yds.	349.5
Bridge Deck Grooving			Sq. Yd.	950
Protective Coat			Sq. Yd.	1,102

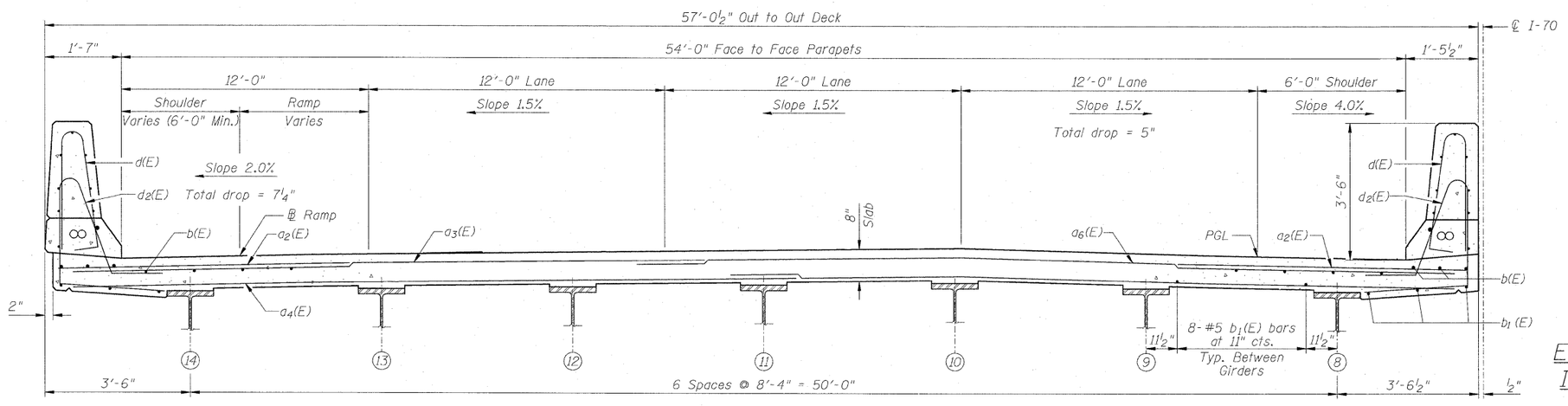

MIN. BAR LAP
#5 Bar = 2'-2"

CROSS SECTION
(Looking West)

Notes:
See Sheet 10 of 30 for superstructure details.
Bars indicated thus 54x6-#5 etc. indicates 54 lines of bars with 6 lengths per line.
See Sheet 10 of 30 for parapet reinforcement.
See Sheet 11 of 30 for Section A-A.

EASTBOUND SUPERSTRUCTURE PLAN
INTERSTATE 70 OVER 1ST STREET
FAI-70
SECTION 82-1-2HB
ST. CLAIR COUNTY
STA. 192+97.45
STRUCTURE NO. 082-0312 (EB)
STRUCTURE NO. 082-0313 (WB)

ZROKA engineering
Zroka Engineering, P.C.
4216 North Hermitage
Chicago, IL 60613

FILE NAME = ...\DBTRI-2820312-2820313-76C50-009-EBSuperstructurePlan.dgn	USER NAME = SAW	DESIGNED - LAS	REVISED -
	PLOT SCALE = 1.0000 ' / IN.	DRAWN - SAW	REVISED -
	PLOT DATE = 2/25/2011	CHECKED - LAS	REVISED -
		DATE - 3-18-11	REVISED -

STATE OF ILLINOIS
DEPARTMENT OF TRANSPORTATION

EASTBOUND SUPERSTRUCTURE PLAN

SCALE: NONE | SHEET NO. 9 OF 30 SHEETS | STA. | TO STA.

F.A.P. RTE.	SECTION	COUNTY	TOTAL SHEETS	SHEET NO.
998	82-1-2HB	ST. CLAIR	72	39
SN 082-0312 & 082-0313		CONTRACT NO. 76C50		
FED. ROAD DIST. NO.	ILLINOIS	FED. AID PROJECT		