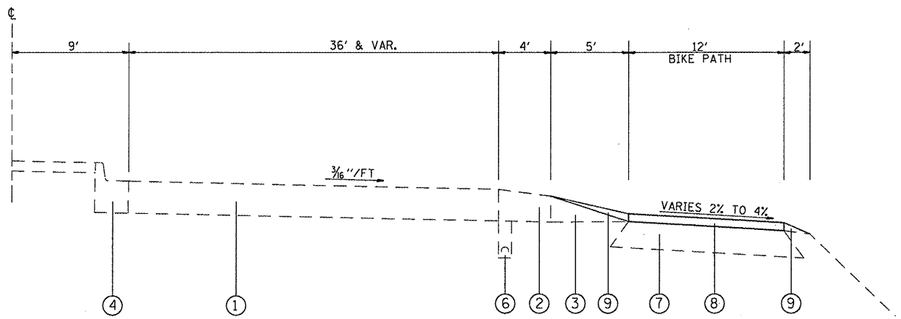

CROSS SECTION
(US 67)
STA. 57+37.08 TO STA. 58+38.20

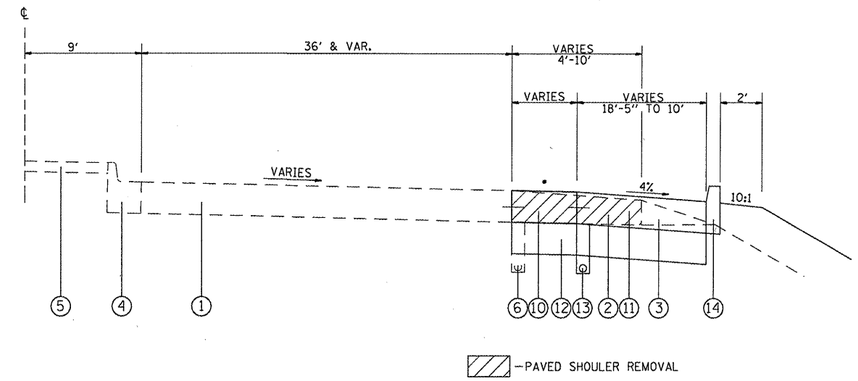

CROSS SECTION
(US 67)
STA. 58+38.20 TO 59+27.40

*MATCH EXISTING ROADWAY SLOPE

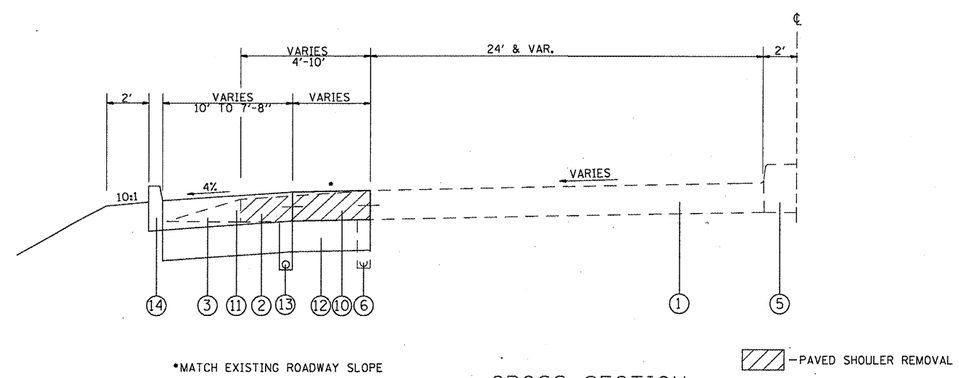

*MATCH EXISTING ROADWAY SLOPE

CROSS SECTION
(US 67 TO CLARK BRIDGE)
STA. 254+61.12 TO 255+69.50

LEGEND

1. EXISTING JOINTED CEMENT CONCRETE PAVEMENT 9"
2. EXISTING PORTLAND CEMENT CONCRETE SHOULDERS
3. EXISTING AGGREGATE SHOULDERS
4. EXISTING CONCRETE CURB & GUTTER
5. EXISTING CONCRETE MEDIAN
6. EXISTING PIPE UNDERDRAINS (TO BE REMOVED)
7. EXISTING HMA SURFACING 6"
8. PROPOSED INCIDENTAL HMA SURFACING
9. PROPOSED AGGREGATE SHOULDERS, TYPE B
10. PROPOSED P.C.C. PAVEMENT 9"
11. PROPOSED P.C.C. SHOULDERS 9"
12. PROPOSED AGGREGATE BASE COURSE, TYPE A 12"
13. PROPOSED PIPE UNDERDRAINS 4"
14. PROPOSED CONCRETE CURB TYPE B

FILE NAME = $FILEL$	USER NAME = $USER$	DESIGNED - ___	REVISED - ___	STATE OF ILLINOIS DEPARTMENT OF TRANSPORTATION	TYPICAL SECTIONS	F.A.P. RTE.	SECTION	COUNTY	TOTAL SHEETS	SHEET NO.
		DRAWN - ___	REVISED - ___			304/2	406I-2	MADISON	19	5
	PLOT SCALE = $SCALE$	CHECKED - ___	REVISED - ___					CONTRACT NO. 76E60		
	PLOT DATE = $DATE$	DATE - _____	REVISED - ___		SCALE: _____ SHEET NO. __ OF ___ SHEETS STA. _____ TO STA. _____	FED. ROAD DIST. NO. _	ILLINOIS	FED. AID PROJECT		