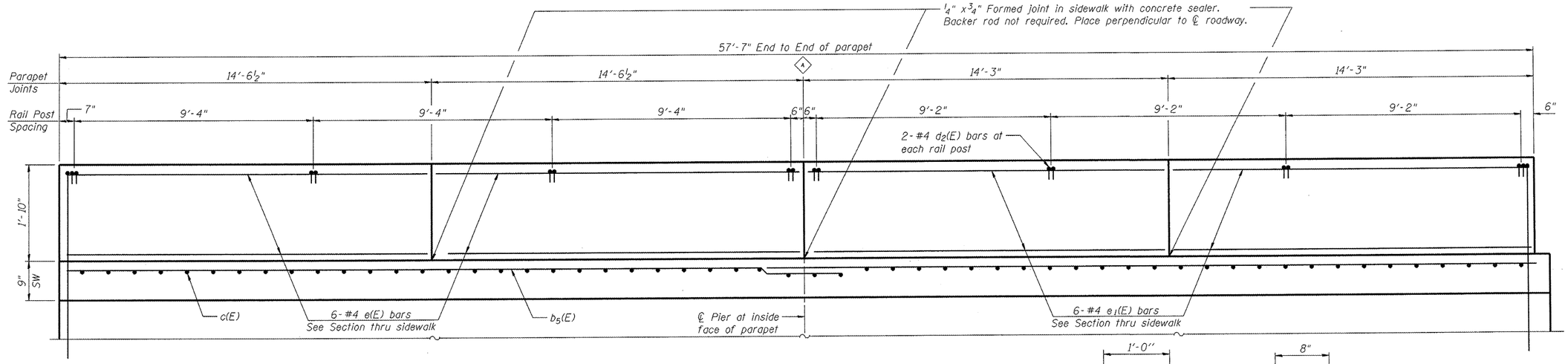

INSIDE PARAPET ELEVATION

A See S-8

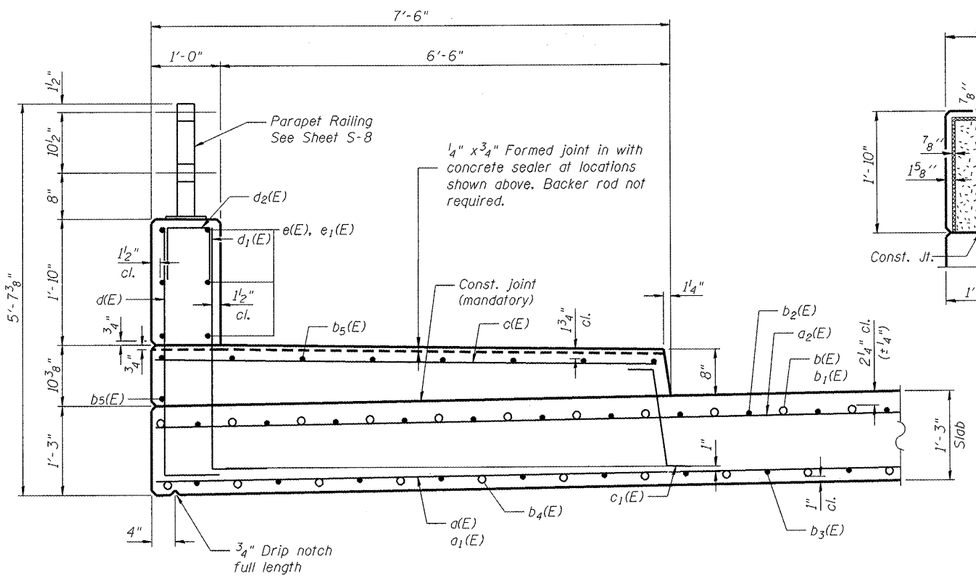

SECTION THRU SIDEWALK

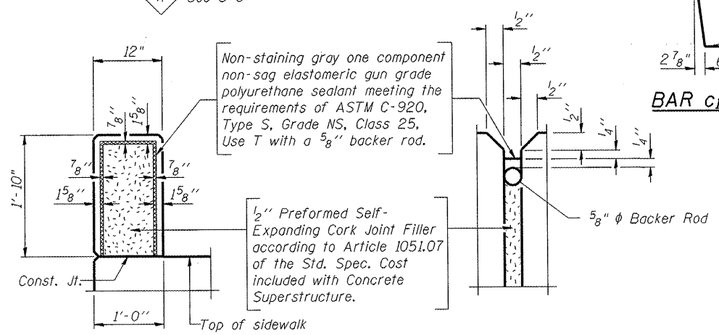

PARAPET JOINT DETAILS

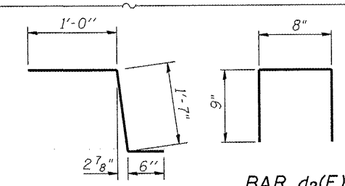

BAR c1(E)

BAR d2(E)

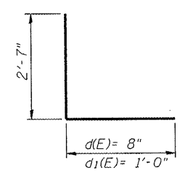

BARS d(E) and d1(e)

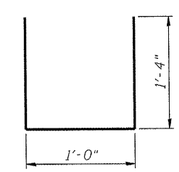

BAR s1(E)

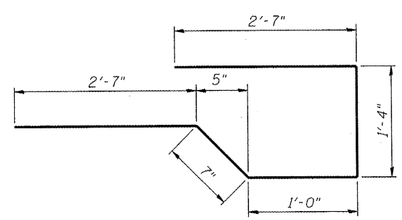

BAR s(E)

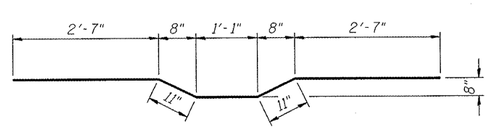

BAR s2(E)

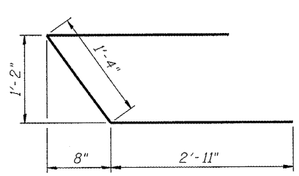

BAR u(E)

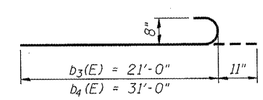

BARS b3(E) and b4(e)

SUPERSTRUCTURE BILL OF MATERIAL

Bar	No.	Size	Length	Shape
a (E)	59	#7	40'- 0"	
a1(E)	59	#7	29'- 10"	
a2(E)	80	#5	34'- 4"	
a3(E)	30	#5	27'- 3"	
b (E)	66	#8	20'- 0"	
b1(E)	67	#8	31'- 6"	
b2(E)	134	#5	17'- 10"	
b3(E)	112	#8	21'- 11"	
b4(E)	114	#8	31'- 11"	
b5(E)	32	#5	30'- 5"	
c (E)	122	#5	7'- 2"	
c1(E)	122	#5	3'- 1"	
d (E)	122	#4	3'- 3"	
d1(E)	122	#6	3'- 7"	
d2(E)	32	#4	2'- 2"	
e (E)	24	#4	14'- 2"	
e1(E)	24	#4	13'- 11"	
h(E)	36	#6	27'- 4"	
h1(E)	8	#5	8'- 4"	
s(E)	114	#5	8'- 1"	
s1(E)	114	#5	3'- 8"	
s2(E)	57	#5	8'- 1"	
v(E)	308	#5	3'- 1"	
v1(E)	80	#4	2'- 6"	
v2(E)	102	#5	1'- 11"	
u(E)	6	#5	7'- 2"	
Concrete Superstructure			Cu. Yd.	240.4
Reinforcement Bars, Epoxy Coated			Pound	48,590
Bridge Deck Grooving			Sq. Yd.	317
Protective Coat			Sq. Yd.	459

Bars indicated thus 1 x 3-#5 etc. indicates 1 line of bars with 3 lengths per line.

COMPANY NAME: #COMPANY_NAME#
PROJECT CONTACT: CONTACT1
CLIENT:
DATE PLOTTED: 3/31/2011 7:25:51 AM
FILE NAME: 80100001-Sub01.dgn
FILE LOCATION: project
PEN TABLE: Street 22x34.tbl

HRGreen.com
Illinois Professional Design Firm # 184-001322
HRGreen

USER NAME = Karft	DESIGNED - KMA	REVISED -	
	CHECKED - RGD	REVISED -	
PLOT SCALE = N.T.S.	DRAWN - WJH	REVISED -	
PLOT DATE = 3/31/2011	CHECKED - 3/31/11	REVISED -	

STATE OF ILLINOIS
DEPARTMENT OF TRANSPORTATION

SUPERSTRUCTURE DETAILS
FAIRVIEW BOULEVARD – S.N. 101-6060

SHEET NO. S-6 OF S-11 SHEETS

F.A. RTE.	SECTION	COUNTY	TOTAL SHEETS	SHEET NO.
5141	10-00573-00-BR	WINNEBAGO	20	14
		CONTRACT NO. 85540		
		ILLINOIS FED. AID PROJECT		