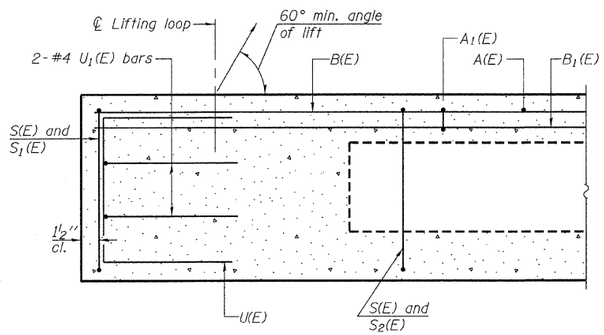

SECTION A-A

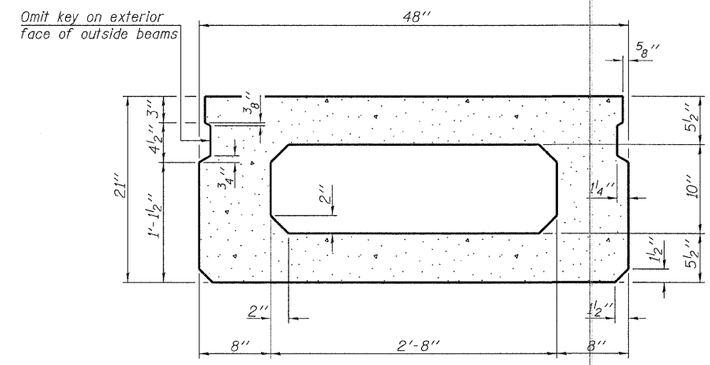

SECTION B-B
(Showing dimensions)

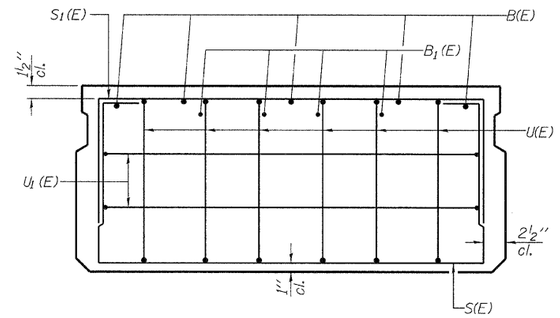

VIEW C-C

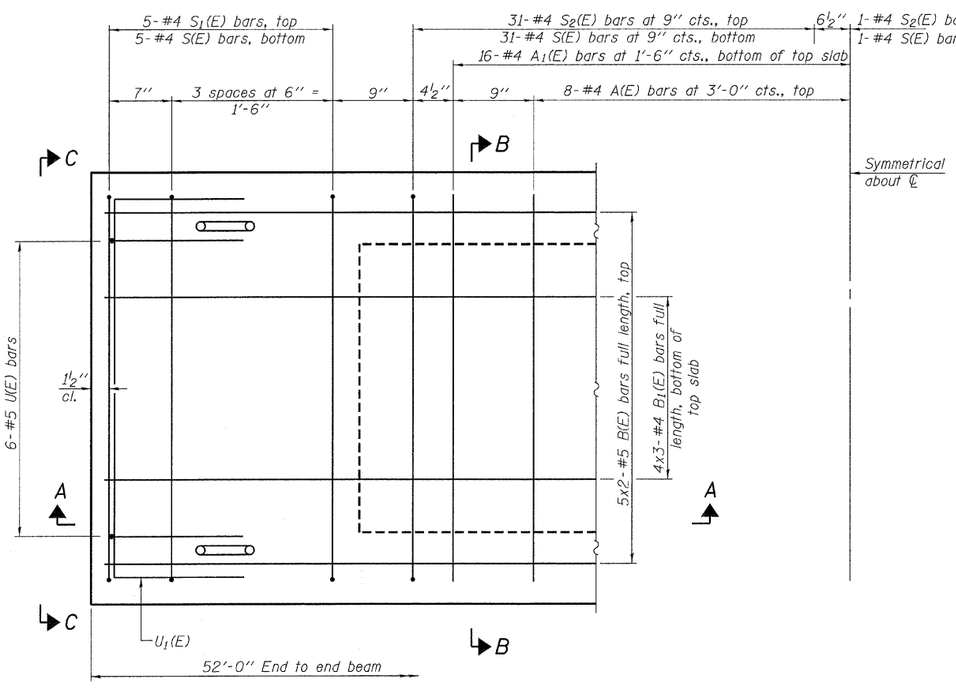

PLAN VIEW

Note: Spacing of S(E) and S2(E) bars may be adjusted up to 4" in the immediate area of the transverse tie diaphragms to miss the block outs for the transverse ties.

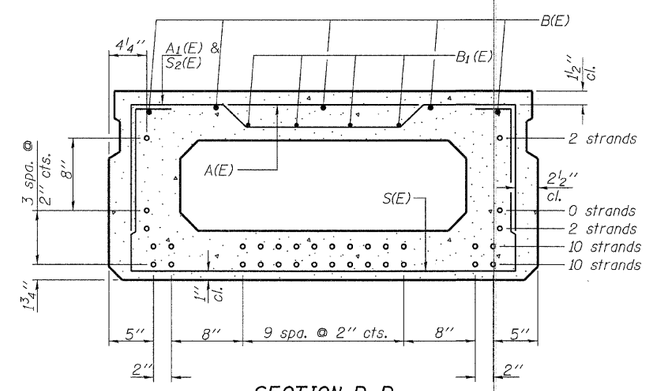

SECTION B-B
(Showing reinforcement and permissible strand locations)

Note: Place the number of strands specified in each row symmetrically about the centerline of beam in the permissible strand locations shown.

BAR LIST
ONE BEAM ONLY
(For Information Only)

Bar	No.	Size	Length	Shape
A(E)	16	#4	3'-7"	—
A1(E)	32	#4	3'-10"	~
B(E)	10	#5	27'-2"	—
B1(E)	12	#4	18'-8"	—
S(E)	73	#4	7'-5"	⊔
S1(E)	10	#4	5'-11"	⊓
S2(E)	63	#4	6'-2"	⊓
U(E)	12	#5	4'-0"	⊏
U1(E)	4	#4	6'-0"	⊓

Note: See sheets 3 & 4 of 8 for additional details and Bill of Material.

MINIMUM BAR LAP
#4 bar = 2'-0"
#5 bar = 2'-6"

PD-2148-0 7-1-10

FILE NAME = 100231-sht-bridge.dgn	USER NAME =	DESIGNED - A.S.L.	REVISED -	STATE OF ILLINOIS GALLATIN COUNTY HIGHWAY DEPARTMENT	21" x 48" PPC DECK BEAM STRUCTURE NO. 030-3134	F.A.S.	SECTION	COUNTY	TOTAL SHEETS / SHEET NO.
HAMPTON, LENZINI AND RENWICK, INC. 3565 STEVENSON DRIVE, SUITE 201 SPRINGFIELD, ILLINOIS 62703 ILLINOIS PROFESSIONAL DESIGN FIRM LS / PE / SE CORP. 184.001959		CHECKED - S.W.M.	REVISED -			892	10-00075-00-BR	GALLATIN	25 / 19
	PLOT SCALE =	DRAWN - D.T.M.	REVISED -					CONTRACT NO. 99456	
	PLOT DATE = 3/14/2011	CHECKED - S.W.M.	REVISED -		SHEET NO. 2 OF 8 SHEETS		ILLINOIS	FED. AID PROJECT	