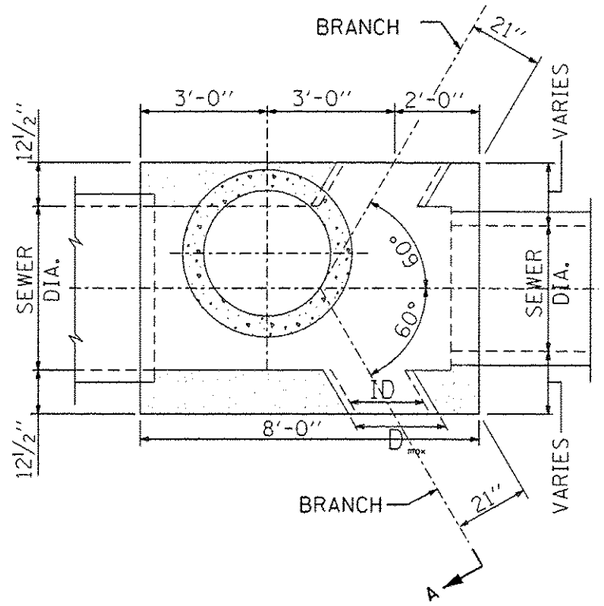

Typical 4 Opening Type B Manhole

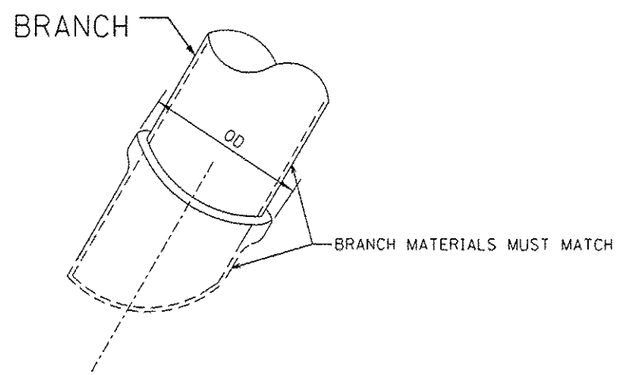

Branch sizing chart

ID Pipe (in.)	material	OD Pipe (in.)	D max* (in.)
12	VCP	14.36	18.36
15	VCP	17.8	21.8
18	VCP	21.48	25.48
21	VCP	25.54	31.54
8	DIP	9.05	13.05
10	DIP	11.1	15.1
12	DIP	13.2	17.2
14	DIP	15.3	19.3
16	DIP	17.4	21.4
18	DIP	19.5	23.5
20	DIP	21.6	27.6
24	DIP	25.8	31.8
24	RCP III	30	36
27	RCP III	33.5	39.5
30	RCP III	37	43
33	RCP III	40.5	46.5
36	RCP III	44	50
42	RCP III	52.5	58.5

Notes:

1. If the pipe class is not shown on this table, then D max =OD pipe + 4"

*2. Dmax indicates the maximum size of branch opening to be cast or cut into structure

NOTES:

1. CONTRACTOR MUST SUBMIT SHOP DRAWINGS OF ALL PROPOSED MANHOLE CONFIGURATIONS FOR APPROVAL PRIOR TO SUBMISSION OF MATERIAL ORDERS.

2. CONNECTION BELLS MAY BE INSTALLED AT MANUFACTURER'S SITE, OR MORTARED IN PLACE IN THE FIELD.

3. BASES MUST BE PRECAST WITH THE CORRECT NUMBER OF PIPE OPENINGS, CORRESPONDING TO THE REPRESENTATION IN THE PLAN AND PROFILE SHEETS.

4. PATCHING, BRICKING, OR OTHER MATERIAL METHODS OF CLOSING UNUSED HOLES WILL NOT BE ACCEPTED.

A

STANDARD REVISIONS	
DATE	DESCRIPTION
1/9/14	APPROVED PLAN

PERCENT COMPLETE	DATE
30	
60	
75	
90	
100	
BULLETIN	

CITY OF CHICAGO
DEPARTMENT OF WATER MANAGEMENT
BUREAU OF ENGINEERING SERVICES

TYPE "B" MANHOLE CONFIGURATIONS

DRAWN: SBH
DESIGNED:
CHECKED:
REVIEWED:

A.10.A

OF

PN

AECOM
305 EAST WACKER DRIVE, SUITE 1400
CHICAGO, IL 60601-5276
PHONE: (312) 373-7700 FAX: (312) 373-6800

U60W28-sht-CDWM-Detail-05C.dgn	DESIGNED -	REVISED - A 5/27/2014	
USER NAME = schwanekjd	DRAWN -	REVISED -	
PLOT SCALE = 2.0000 ' / in.	CHECKED -	REVISED -	
PLOT DATE = 5/27/2014	DATE - 04/28/14	REVISED -	

STATE OF ILLINOIS
DEPARTMENT OF TRANSPORTATION

CHICAGO DEPARTMENT OF WATER MANAGEMENT
STANDARD DETAILS

SCALE: NTS | SHEET 5C OF 8 SHEETS | STA. | TO STA.

F.A.I. RTE.	SECTION	COUNTY	TOTAL SHEETS	SHEET NO.
90/94/290	2013-010R	COOK	747	641C

CONTRACT NO. 60W28

ILLINOIS FED. AID PROJECT

FILE PATH = C:\Users\kgschwanekjd\Desktop\EDW28\U60W28-sht-CDWM-Detail-05C.dgn