STATE OF ILLINOIS
DEPARTMENT OF TRANSPORTATION

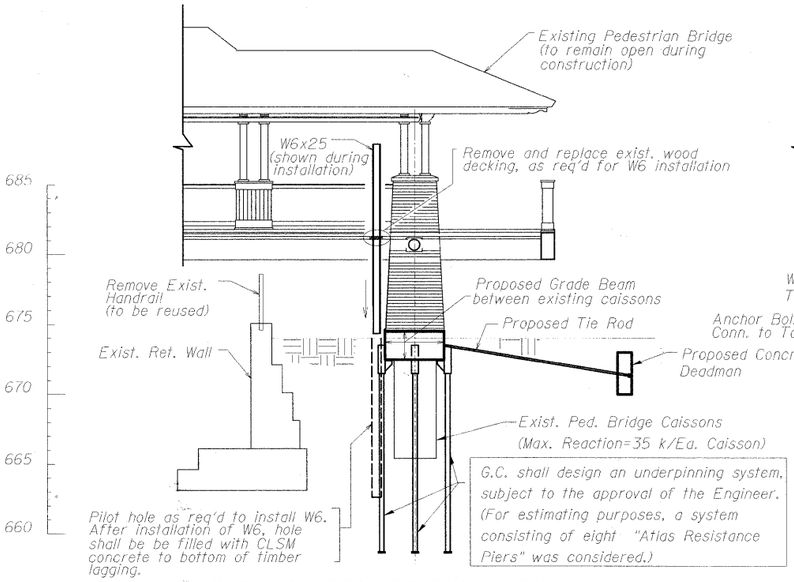

SHOWING PRIOR TO EXCAVATION

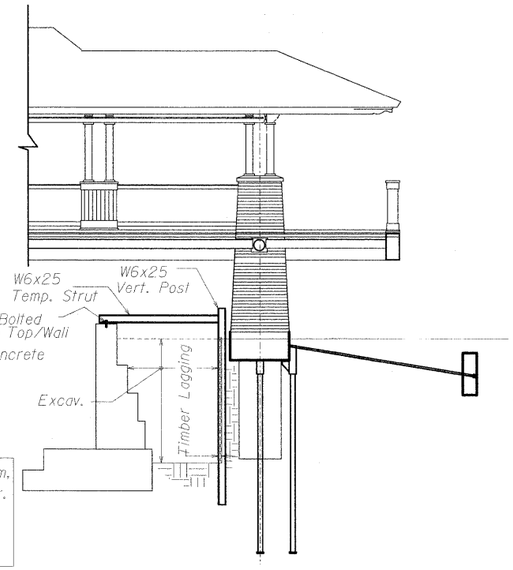

SHOWING DURING EXCAVATION

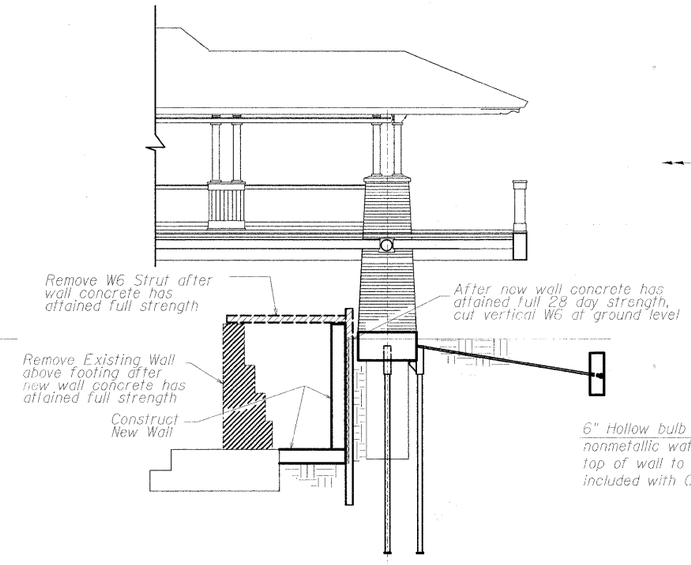

SHOWING DURING NEW WALL CONSTRUCTION

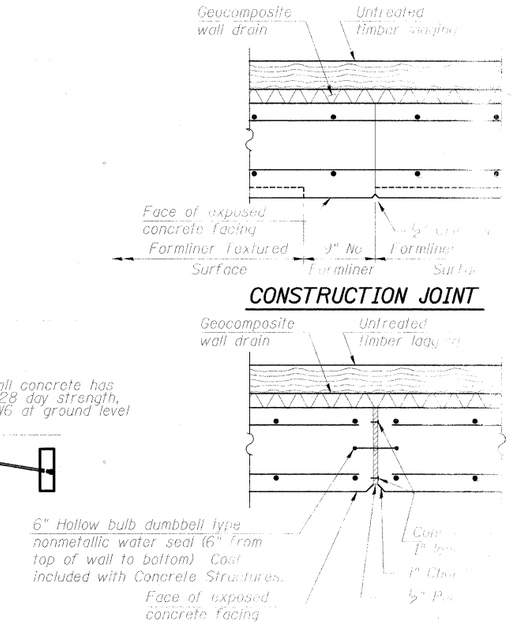

JOINT DETAIL

(B) SECTION - SHOWING PORTION OF WALL UNDER PEDESTRIAN BRIDGE

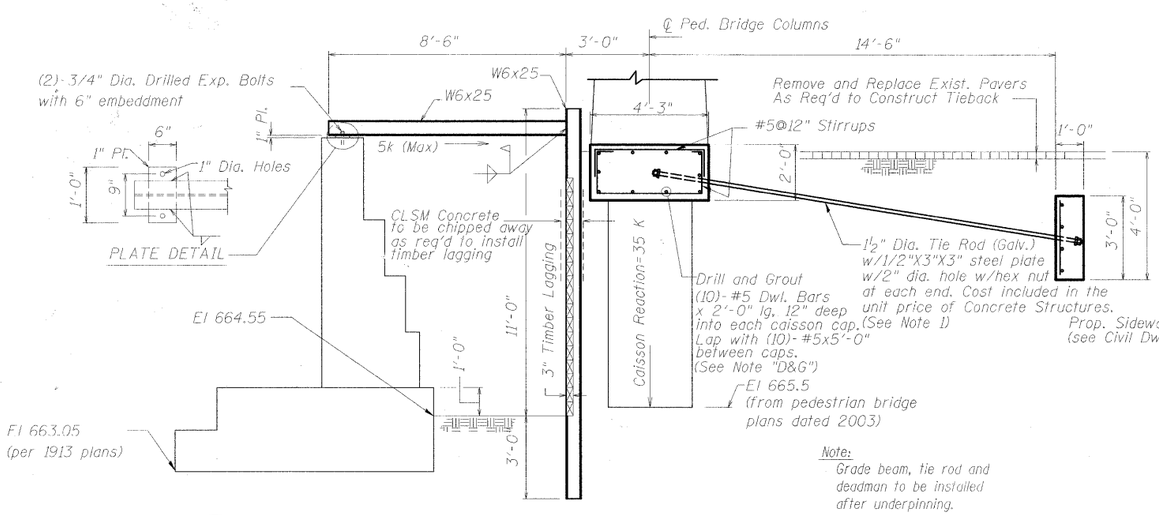

Note:
Grade beam, tie rod and deadman to be installed after underpinning.

(1) DETAIL - SHOWING EXCAVATION

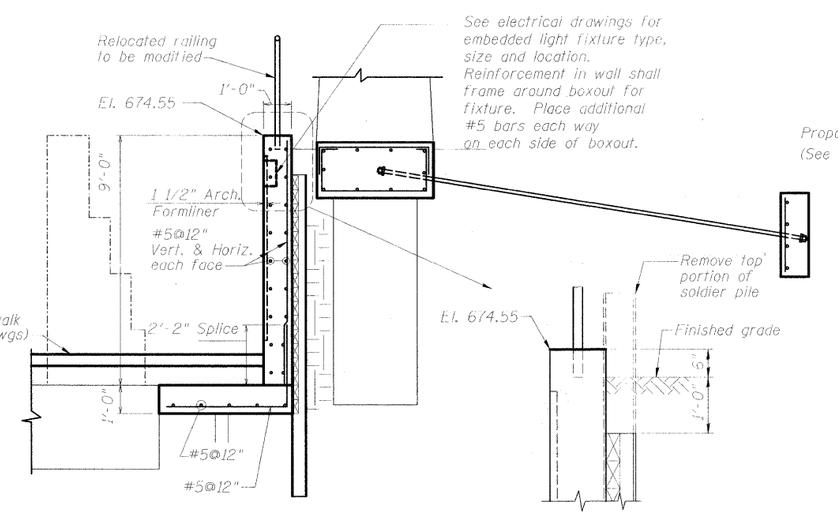

(2) DETAIL - SHOWING WALL CONSTRUCTION

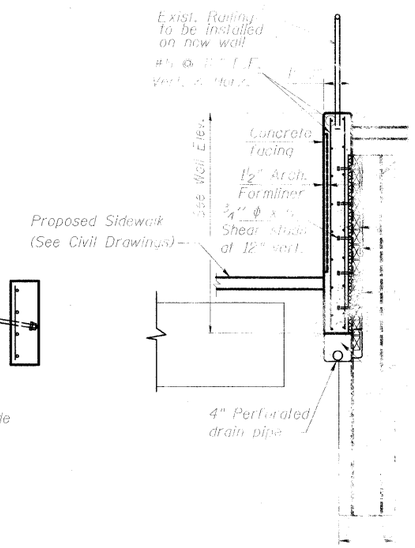

(D) SECTION - SOLDIER PILE WALL

Note "D&G"
Drilling and Grouting of the dowel bars shall conform to the requirements of Section 584 of the Standard Specifications. The cost of the material and dowel installation is included in the unit price of Reinforcement Bars, Epoxy Coated.

Note 1:
Excavation and backfill for deadman and tie rods shall be included in the item "Structure Excavation".

DESIGNED	KJH
CHECKED	BB
DRAWN	KJH
CHECKED	AWW

McDonough Associates Inc.
Engineers / Architects
130 East Randolph Street Chicago, Illinois 60601

WALL DETAILS
STRUCTURE NO. 049-6159

SHEET NO.	F.A.U. RTE.	SECTION	COUNTY	SHEETS
S-15	1257	08-00083-00-BT	LAKE	51
SHEETS S-25	SN 049-6159		CONTRACT NO. 63450	
	FED. ROAD DIST. NO. 1	ILLINOIS	FED. AID PROJECT	