STATE OF ILLINOIS
DEPARTMENT OF TRANSPORTATION

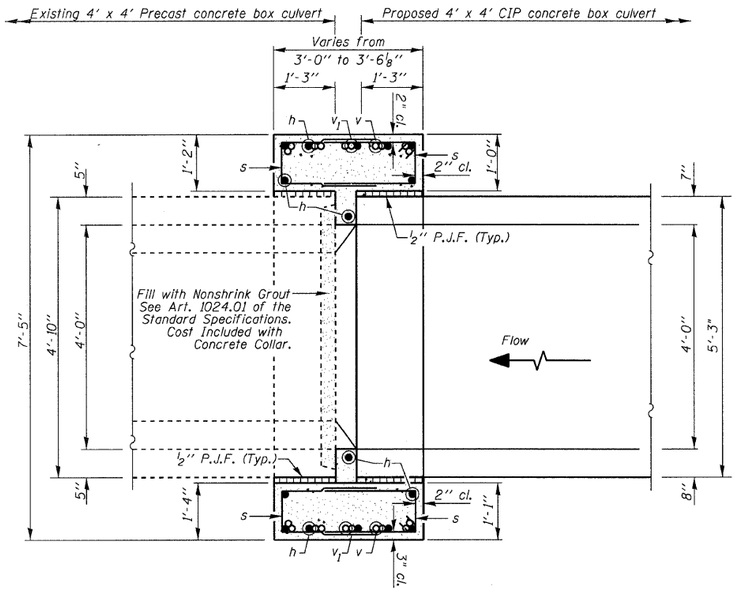

SECTION THRU BOX AT COLLAR
SECTION A-A

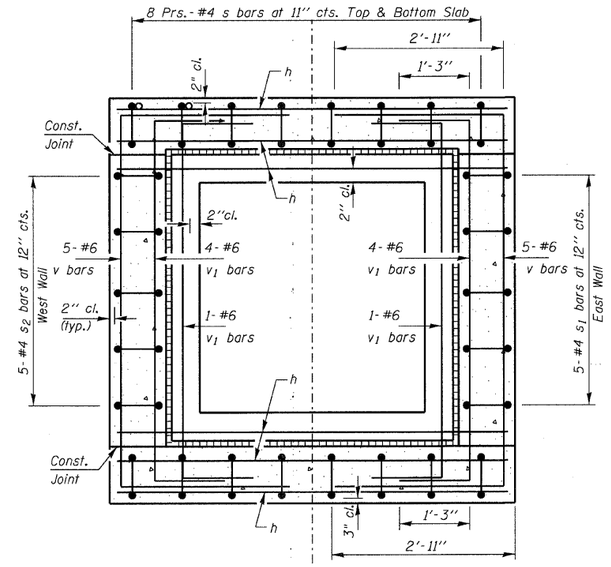

SECTION THRU BOX AT COLLAR
SECTION B-B

GENERAL NOTES

Reinforcement bars shall conform to the requirements of ASTM A 706 Grade 60 (IL Modified). See Special Provision.

All exposed edges shall be chamfered ¾" unless otherwise noted.

All construction joints shall be bonded.

Plan dimensions and details relative to existing structures have been taken from existing plans and are subject to nominal construction variations. It shall be the Contractor's responsibility to verify such dimensions and details in the field and make necessary approved adjustments prior to ordering materials. Such variations shall not be cause for additional compensation for a change in the scope of the work, however, the Contractor will be paid for the quantity actually furnished at the unit price bid for the work.

DESIGN STRESSES
FIELD UNITS

f' c = 3,500 psi
f y = 60,000 psi (Reinf.)

BILL OF MATERIAL

Bar	No.	Size	Length	Shape
h	16	#6	6'-7"	
s	32	#4	5'-2"	
s1	5	#4	8'-3"	
s2	5	#4	7'-5"	
v	10	#6	12'-9"	
v1	10	#6	9'-5"	
Concrete Collar			Cu. Yd.	3.7
Reinforcement Bars			Pound	660

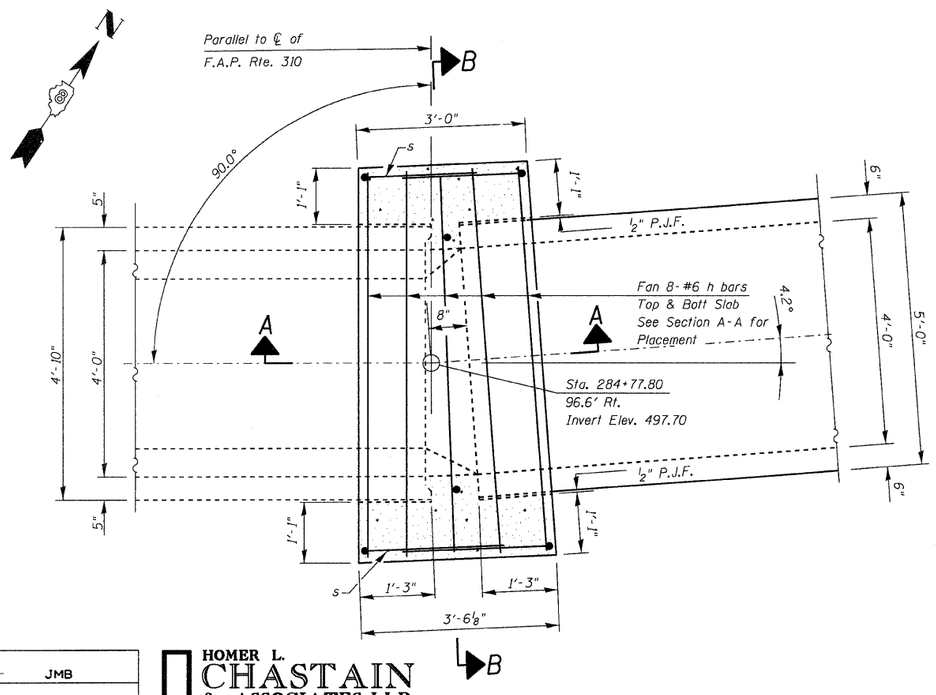

PLAN VIEW

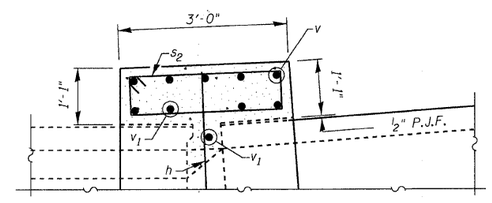

SECTION THRU WEST SIDEWALL

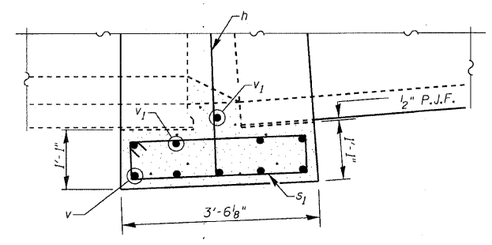

SECTION THRU EAST SIDEWALL

MIN. BAR LAP
#4 - 1'-4"

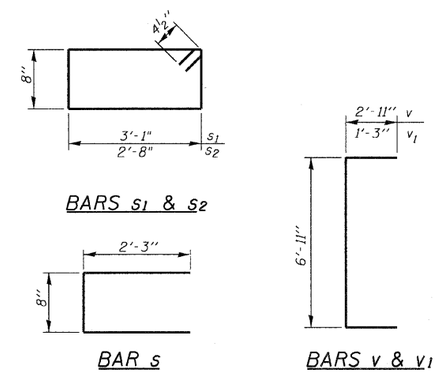

STA 284+77.8 RT
UPSTREAM 4'X4'
SETTLEMENT COLLAR DETAILS
FAP ROUTE 310 (US 67)
SECTION 60-16-1-1B
MADISON COUNTY

DESIGNED -	JMB
CHECKED -	TES
DRAWN -	R KING
CHECKED -	TES

HOMER L. CHASTAIN & ASSOCIATES, LLP
CONSULTING ENGINEERS
DECATUR (217) 422-8544
CHICAGO (773) 714-0050
ROCKFORD (815) 489-0050
184-001397

SHEET NO. 3 OF 3 SHEETS	F.A.P. RTE.	SECTION	COUNTY	TOTAL SHEETS	SHEET NO.
	310	60-16-1-1B	MADISON	481	163
	FAP ROUTE 310 (US 67)		CONTRACT NO. 76318		
	FED. ROAD DIST. NO.	ILLINOIS	FED. AID PROJECT		