CONTRACT NO. 76A47

F.A.P. RTE.	SECTION	COUNTY	TOTAL SHEETS	SHEET NO.
809	(133,134)RS-5,135RS-6	ST. CLAIR	762	345
STA. _____		TO STA._____		
FED. ROAD DIST. NO. _	ILLINOIS	FED. AID PROJECT		

STA. 456+93.93 BOTH SIDES

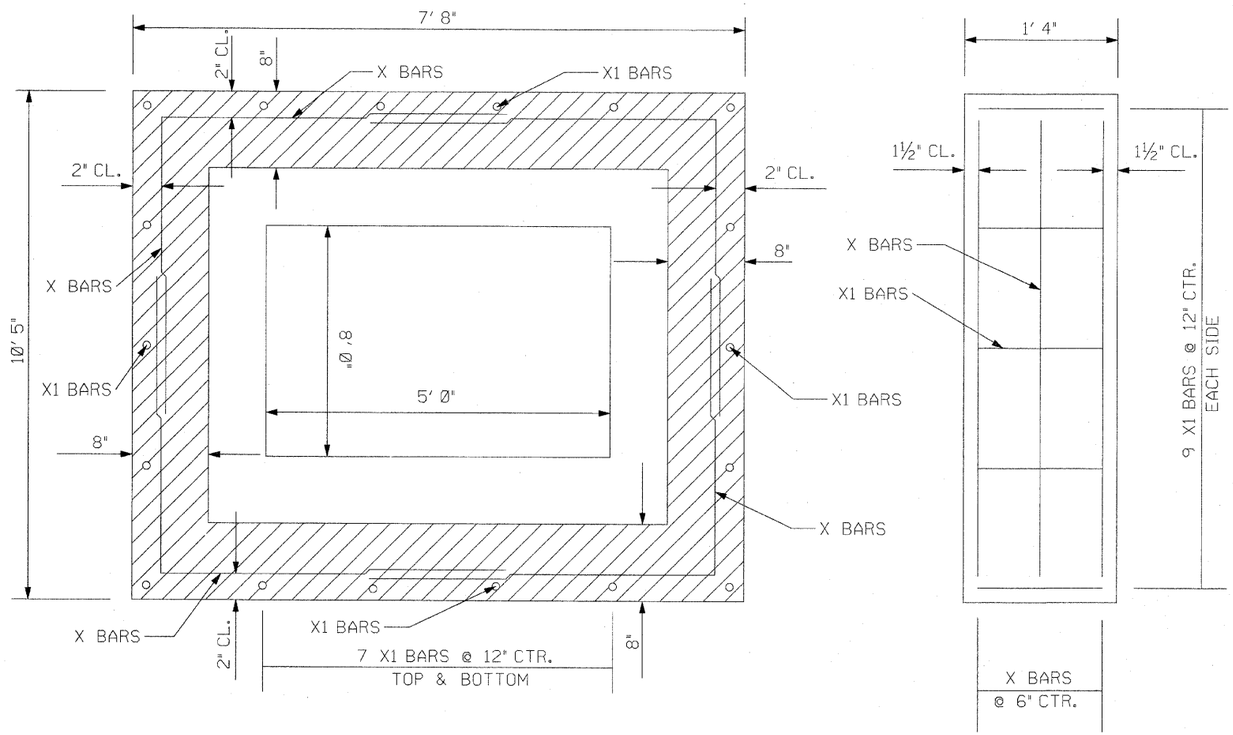

CAST IN PLACE
CONNECTION COLLAR

REVISIONS	
NAME	DATE

DRAINAGE DETAILS
CULVERT EXTENSIONS

FAP ROUTE 809 (IL 158)
SECTION (133, 134)RS-5, 135RS-6
ST. CLAIR COUNTY

DRAWN BY:

PLAN
NOTE BOOK
NO.
SURVEYED
PLOTTED
ALIGNMENT CHECKED
RT. OF WAY CHECKED
CADD FILE NAME
BY
DATE

DATE-TIME
DGN-SPEC
*REF-
*REF-