CONTRACT NO. 76A47

F.A.P. RTE.	SECTION	COUNTY	TOTAL SHEETS	SHEET NO.
809	(133,134)RS-5,135RS-6	ST. CLAIR	762	348
STA. _____	TO STA._____			
FED. ROAD DIST. NO. _	ILLINOIS	FED. AID PROJECT		

PLAN		BY	DATE
	SURVEYED		
	PLOTTED		
NOTE BOOK	ALIGNMENT CHECKED		
	RT. OF WAY CHECKED		
NO. ____	CADD FILE NAME		

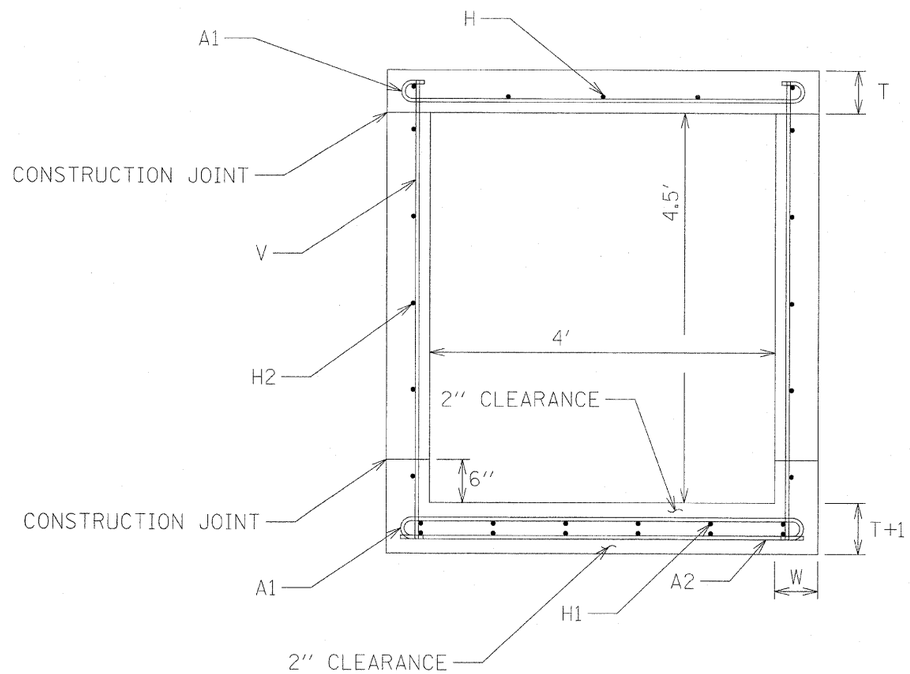

* 1 1/2" BAR CLREARANCE UNLESS OTHERWISE NOTED
** THE NUMBER OF H BARS INCLUDES THE TWO BARS SHOWN IN THE TOP OF THE TOP SLAB

STATION	CULVERT SIZE	FILL	CULVERT BARS																										CONCRETE BOX CULVERTS CUBIC YARD PER FOOT
				SLABS															WALLS										
			T	A1 BAR					A2 BAR			H BAR			H1 BAR			W	V BAR			V1 BAR			H2 BAR			
				SIZE	SPACING	LENGTH	DIMENSION A	DIMENSION B	SIZE	SPACING	LENGTH	SIZE	SPACING	NUMBER	SIZE	SPACING	NUMBER		SIZE	SPACING	LENGTH	SIZE	SPACING	LENGTH	SIZE	SPACING	NUMBER	
		FEET	INCHES		INCHES	FEET	INCHES	FEET		INCHES	FEET		INCHES			INCHES		INCHES		INCHES	FEET		INCHES	FEET		INCHES		
597+11	4' X 4.5'	5.5'	6	4	9	5' - 8"	6	4'- 8"	4	24	4' - 6"	5	13	5	5	10	12	6	4	9	5' - 3.5"	-	-	-	5	12	10	0.367

REVISIONS	
NAME	DATE

DRAINAGE DETAILS
CULVERT EXTENSIONS

FAP ROUTE 809 (IL 158)
SECTION (133, 134)RS-5, 135RS-6
ST. CLAIR COUNTY

DRAWN BY:

****
DATE-TIME
DGN-SPEC
SHEET
REF