FOR INFORMATION ONLY

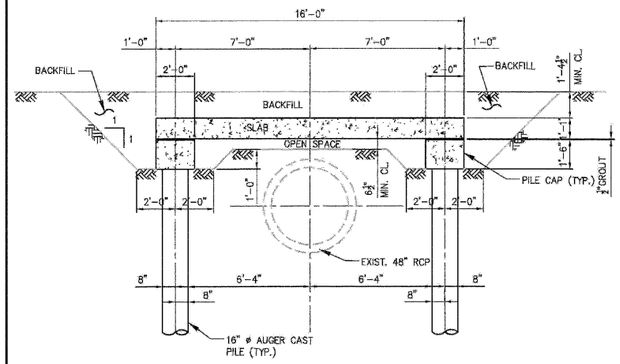

TYPICAL SECTION - 48" RAW WATER PIPE PROTECTION STRUCTURE

NTS

NOTE: FOR REINFORCING, REFERENCE REMAINING DETAILS THIS SHEET.

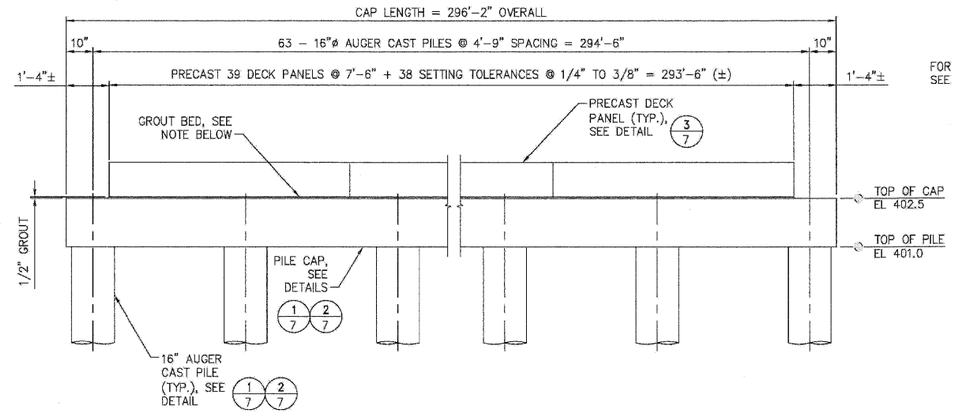

PARTIAL ELEVATION DECK PANEL, PILE CAP AND AUGER CAST PILE SYSTEM

SCALE: 3/4"=1'-0"

NOTE: DECK PANELS ARE TO BE SET ON A BED OF GROUT THAT COVERS THE FULL AREA OF CONTACT, AND MEASURES 1/2" THICK MINIMUM, AFTER PANELS ARE SET. GROUT SHALL HAVE A MINIMUM FINAL STRENGTH OF 200 PSI.

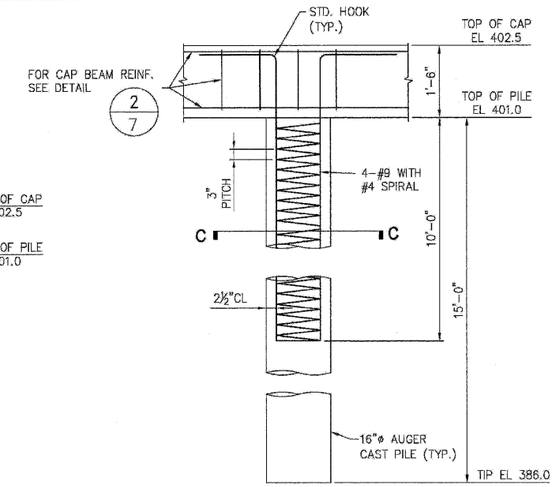

ELEVATION

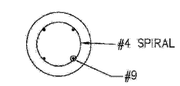

SECTION C-C

DETAIL 1/7 TYPICAL AUGER CAST PILE

NTS

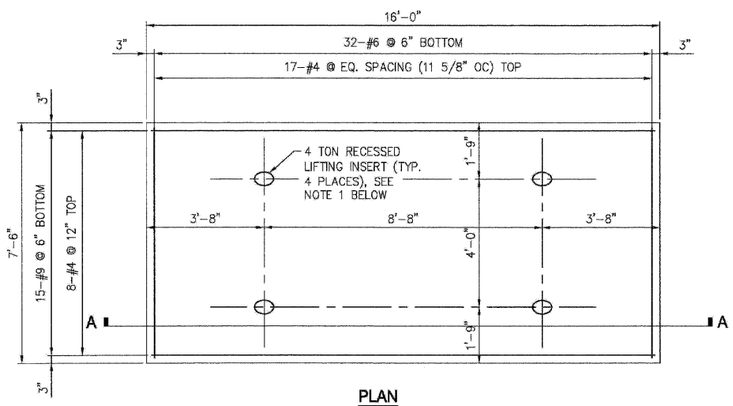

PLAN

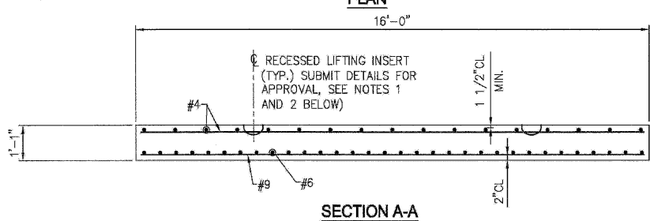

SECTION A-A

DETAIL 3/7 PRECAST DECK PANEL

3/4" = 1'-0"

NOTES:

1. PRECAST MANUFACTURER SHALL TAKE CARE TO MAINTAIN 1 1/2" CLEARANCE BETWEEN REINFORCING STEEL AND LIFT INSERT RECESS FORMER WHILE MAINTAINING DIMENSIONS BETWEEN LIFT ASSEMBLIES.
2. PRECAST MANUFACTURER SHALL FOLLOW LIFT INSERT INSTALLATION INSTRUCTIONS FOR, BUT NOT LIMITED TO, SUPPORTING REINFORCING STEEL IN PROXIMITY TO LIFT INSERT AND SECURING INSERT LIFTING BAR TO REINFORCING STEEL.

STRUCTURAL GENERAL NOTES:

1. ALL WORK SHALL BE IN ACCORDANCE WITH THE "STANDARD SPECIFICATIONS FOR ROAD AND BRIDGE CONSTRUCTION," ADOPTED JANUARY 1, 2007 BY THE ILLINOIS DEPARTMENT OF TRANSPORTATION.

2. CONCRETE SHALL CONFORM TO THE FOLLOWING STANDARD CLASSES, UNLESS OTHERWISE APPROVED BY THE ENGINEER:
   - DECK PANELS: CLASS PC, 4500 PSI AT 28 DAYS, 5-8% AIR
   - PILE CAPS: CLASS BS, 4000 PSI AT 14 DAYS, 5-8% AIR
   - PILES: CLASS DS, 4000 PSI AT 14 DAYS, 5-8% AIR

3. REINFORCEMENT BARS SHALL CONFORM TO THE REQUIREMENTS OF AASHTO M31 (ASTM A615) OR M322 (ASTM A996), GRADE 60, FOR DEFORMED BARS.

4. ANALYSIS AND DESIGN PROCEDURES ARE BASED UPON AASHTO STANDARD SPECIFICATIONS FOR HIGHWAY BRIDGES, 17TH EDITION, 2002.

5. LOAD CAPACITY: THE PIPE PROTECTION STRUCTURE, AS DEPICTED IN THE TYPICAL SECTION VIEW, IS DESIGNED TO SUPPORT THE:
   - A. SELF-WEIGHT OF THE CONCRETE STRUCTURE, PLUS
   - B. EARTH BACKFILL OF APPROXIMATELY 1 FT - 4½ IN., PLUS ONE OF THE FOLLOWING:
   - C. A UNIFORMLY - DISTRIBUTED CONSTRUCTION LIVE LOAD OF 1,000 PSF, OR
   - D. AN UNLOADED CRAWLER CRANE SIMILAR TO A MANITOWOC MODEL 4100, WEIGHING APPROXIMATELY 178 TONS, ON TWO CRAWLER TRACKS 4 FT WIDE BY 23 FT LONG, WITH A TRACK SPACING OF APPROXIMATELY 14 - 17 FT. THE CRANE SHALL NOT CROSS THE STRUCTURE WHILE CARRYING A LOAD.

6. NOTIFY ENGINEER IMMEDIATELY IF ANTICIPATED LOADINGS EXCEED THOSE DESCRIBED ABOVE.

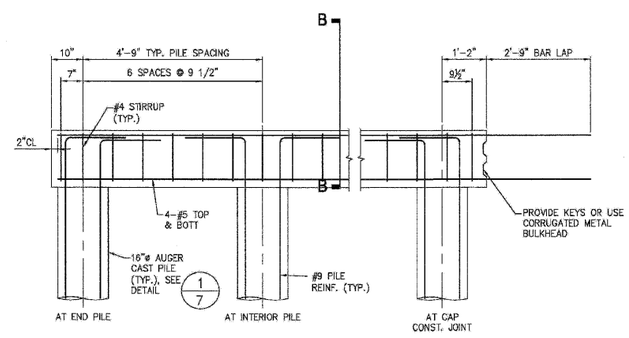

DETAIL 2/7 TYPICAL PILE CAP

3/4" = 1'-0"

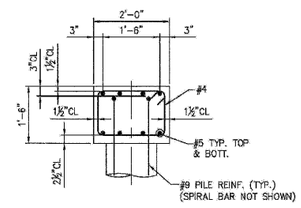

SECTION B-B

FOR INFORMATION ONLY

-\DBCONN-05-BORDER1.DGN
6-03-2010, 1:45:53
BONDHUJO
\\FS-0844-\MH\VAULT\D-TRANS_07\2202\20868-001\CIVIL\CAD\99 ALL CONTRACTS\CONN\SHEETS CONTRACT 05\DBCONN-05-SHT-PYTDETAIL-4.DGN

FILE NAME = $FILEL$	USER NAME = $USER$	DESIGNED - JB	REVISED -	STATE OF ILLINOIS DEPARTMENT OF TRANSPORTATION I-70 CONNECTION	WATER MAIN PROTECTION DETAILS FOR INFORMATION ONLY	F.A.P. RTE. 998	SECTION 82-2-IHVB	COUNTY ST. CLAIR	TOTAL SHEETS 285 / SHEET NO. 110
		DRAWN - JFS	REVISED -					CONTRACT NO. 76C44	
TENG & ASSOCIATES, INC. ENGINEERS/ARCHITECTS/PLANNERS CHICAGO, ILLINOIS	PLOT SCALE = $SCALE$	CHECKED - ACL	REVISED -						
	PLOT DATE = $DATE$	DATE - 06/04/10	REVISED -		SCALE: N.T.S. SHEET NO. OF SHEETS STA. TO STA.	FED. ROAD DIST. NO.	ILLINOIS	FED. AID PROJECT	